mesan
ESSENTRA COMPONENTS

CATALOGUE

ACCESS SOLUTIONS



ESSENTRA COMPONENTS

WELCOME TO ESSENTRA

We are global manufacturers and distributors of vital component parts for hundreds of markets and thousands of products. We're proud of what we do and believe that even the smallest products have a big part to play.



12 Manufacturing **Facilities**

>1 BILLION Parts in stock

30,000 Products available

47 Sale & Distribution Operations

4 R&D Centres

GLOBAL REACH WITH LOCAL SUPPORT

We bring together the best products, ideas and distribution.



WHO IS ESSENTRA COMPONENTS?

Whether you have a global or local project, with over 75 years' experience, and worldwide coverage, we are here to help you.

FILTRONA

1940's FORMATION OF **FILTRONA CORPORATION**

The company was established in Jarrow, North-East England, in the 1940s as the Fibres division of Bunzl.

1955 FORMATION OF **MOSS PLASTIC PARTS**

Beginning in a garden shed, family business, Robert Moss Ltd, launched in 1955. This later became Moss Plastics.

2004 ACQUISITION OF **SKIFFY**

Based in the Netherlands, Skiffy manufactured and distributed proprietary plastic and metal products into a very broad range of industrial sectors.

2007 ACQUISITION OF **DURACO**

Duraco Express and Duraco Specialty Tapes manufactured adhesive, foam, and removable tapes, hook and loop, and other adhesive products.

2011 ACQUISITION OF **RICHCO**

Founded in a Chicago candy store, Richco, Inc. supplied plastic components to the electrical and electronics industries.

2013 ACQUISITION OF **ULINCO**

Ulinco Components AB, based in Sweden, distributed plastic protection and finishing products, hardware and specialist masking solutions.

2013 REBRAND TO **ESSENTRA**

Essentra's abstract name captures what each of our businesses manufactures and supplies – millions of small but essential components which play a critical enabling role in our customers' products.

2013 ACQUISITION OF **MESAN**

Mesan, Turkey, has been developing high performance ergonomic and innovative, customer orientated products for many years.

2014 ACQUISITION OF **ABRIC**

Abric, Kuala Lumpur, is a leading global manufacturer and distributor of security sealing products and solutions.

2017 ACQUISITION OF **MICRO PLASTICS**

Micro Plastics, based in Arkansas, is a leading manufacturer of threaded nylon fasteners and other plastic components, with four sites in the US, Mexico and the UK.

2018 ACQUISITION OF **HERTILA**

Acquisition of Hertila, a leading manufacturer of plastic components. The acquisition expands the Components division's product range and adds manufacturing capacity in Scandinavia

2019 ACQUISITION OF **INNOVATIVE COMPONENTS**

Acquisition of Innovative Components Inc., headquartered in Chicago, US, Innovative Components is one of the leading manufacturers and distributors of knobs, pins and handles in North America for a broad range of end-markets.

ACCESS SOLUTIONS

Whatever your project demands, we can help with a comprehensive range of access hardware and custom solutions.

Our essential solutions are delivered with consistent quality, reliability and supported by outstanding customer service. With free CAD's, samples and specialist advice available, there is no better choice for your solutions provider.



INDUSTRIES

Our expertise ranges across multiple industries, supported by outstanding customer service. We can reduce your lead times, and provide custom solutions and specialist advice to help you achieve your business goals.

- Indoor & Outdoor Cabinets
- IT Cabinets
- Transformers
- Industrial Machinery
- Power Generators
- HVAC
- Commercial Vehicles
- Rail Transportation
- Road Transportation
- Food Industry
- Diversfied Applications
- Medical Devices

LOCKS / LATCHES

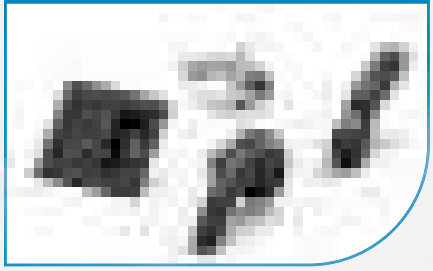

Our locks give you what you need for every application. Materials range from durable polyamide and steel cams to corrosion-resistant stainless steel. With locks for both indoor and outdoor applications, high or low security needs, our products combine both form and function.

HINGES



You're spoiled for choice with our range of high quality hinges. Be it plain or flush mounted doors or cabinets, concealed hinges or side hinges. Made from high security and corrosion resistant materials, there is a hinge for all your needs.

GASKETS

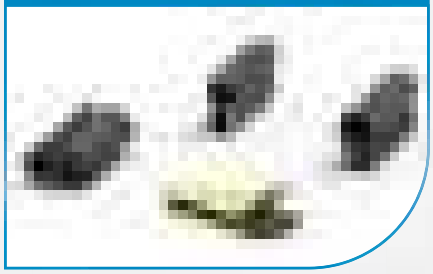

Prevent liquid or gas leaks with our high-performance gasketing & sealing solutions. Easy to apply and available in a range of materials, including PVC, EDPM, rubber blends, and a blend of neoprene, nitrile and PVC.

ACCESSORIES & HANDLES



An extensive range of accessories are designed and manufactured for a variety of industries and applications using rubber, plastic and aluminum. Manufactured with ergonomics and aesthetics in mind, our handles utilise reinforced plastics and aluminum to assure an easy fitting.

ELECTRONIC

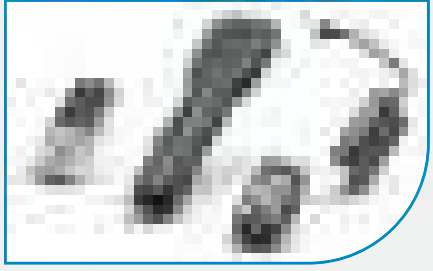

ELS, our integrated access control system incorporates electromechanical locks, access control units and a monitoring system complete with system sensors. The sensors can detect use, allow management of temperature and maintain cabinet security. Use an RFID card, keypad or remote control to manage door access and retrieve detailed reports of cabinet status whenever you need it.

CUSTOM SOLUTIONS

Sometimes you may not find the perfect solution amongst our portfolio of standard products. You may require a small variation, an alternative colour, material or size.

Talk to our in-house team of design engineers and work directly with our R&D and manufacturing centres to create a bespoke solution to meet your needs.

We utilise 3D printing technology to showcase our designs which ensures your specifications are met and assists in expediting lead times from quotation to delivery.

Capabilities

- Design bespoke products
- Range of colour choices
- Customer logo requirement





R&D

Facilitated by our state of the art R&D facilities we are enabled constantly pursuing innovation to offer new and alternative solutions to you and your customers everyday problems.

Technical capabilities

- Proven in-house engineering design team
- All items available in 3D CAD
- Advantage of 3D printing
- Cross-sector experienc



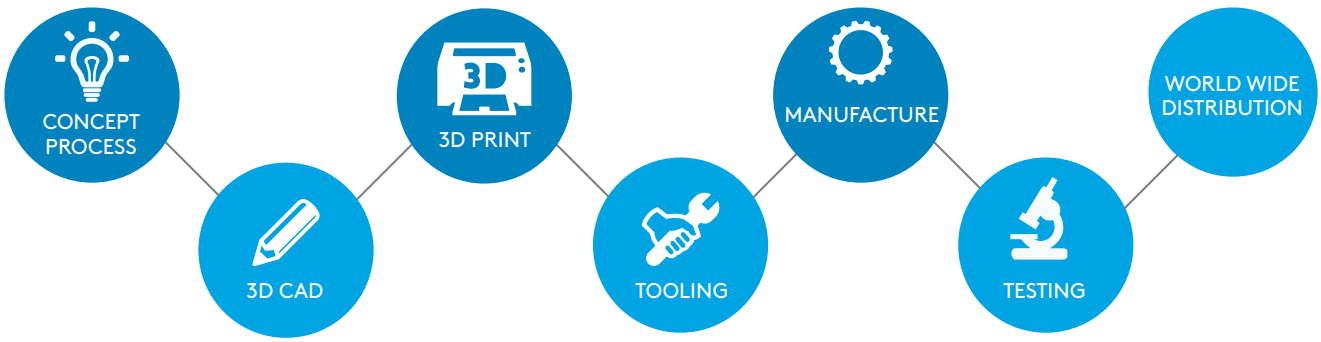

tel | **+90 212 721 44 44** fax | **+90 212 721 44 45**

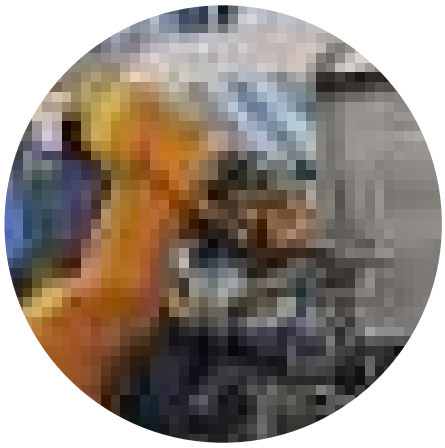

PRODUCTION

Our philosophy in production centres on delivering value to our customers by producing high quality components, on time and at low cost. With the introduction of CNC controlled machines and robot technologies, a significant increase in capacity and quality has been achieved.

Manufacturing technology

- Zinc Die Casting
- Aluminium Die Casting
- Plastic Injection Moulding
- Stamping
- Machining
- Polyurethane Sealing Foam Technology
- Barrel, Cylinder, Keys Technology
- Tool Manufacture Technology
- Custom Machines (Sand blasting ,Laser marking etc)
- Powder Coating



QUALITY

We understand that continuous improvement in all of our processes drives customer satisfaction. We ensure our products exceed customer expectations, whilst adhering to technical and legal requirements. Our products are manufactured to comply with RoHS standards,and meet obligations concerning the Registration, Evaluation, Authorisation, and Restriction of Chemicals (REACH)

We operate a stringent quality assurance programme, ensuring procedural controls are applied to all activities that affect the quality of our products and services.

Our Quality Approved Certificates:

ISO 9001:2015	IATF 16949	ISO 45001	ISO 50001:2001	ISO 14001:2015	ISO 27001:2013
Quality Management Systems	Automotive Quality Management	Health and Safety Management Systems	Energy Management Systems	Environmental Management Systems	Information Security Management

A CLOSER LOOK

INDOOR CABINETS

Mesan Locks boasts an extensive range of secure switchgears, primarily for use on indoor cabinets. The range covers Swinghandles, Linear Locking Systems, 3 Point Locking Systems, Multipoint Locking systems, Quarter Turns, Camlocks, Hinges, Gaskets, and Project Holders.



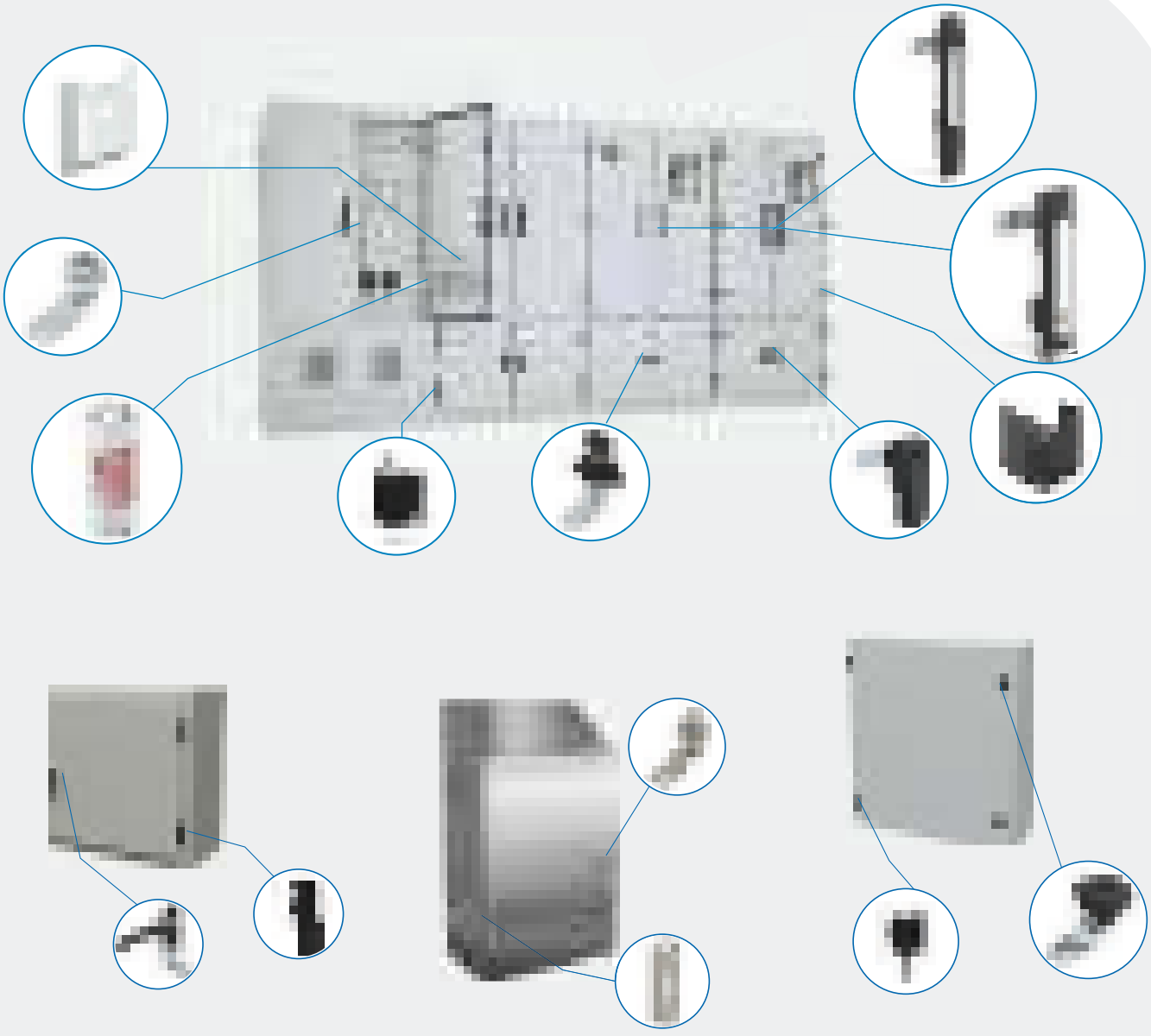

A CLOSER LOOK

OUTDOOR CABINETS

Specialist cabinet locks are required for a variety of applications not limited to ADSL, Telecommunication and CCTV applications. We offer a wide range of products in this sector including high security 1/2 din locks and RC2 standard locks.





A CLOSER LOOK

POWER GENERATORS

Our eclectic product range means we've got a solution no matter your needs. With our customer-centric designs, alternative solutions and our high-standard products, we can meet all your needs for both basic and sound proof canopies.



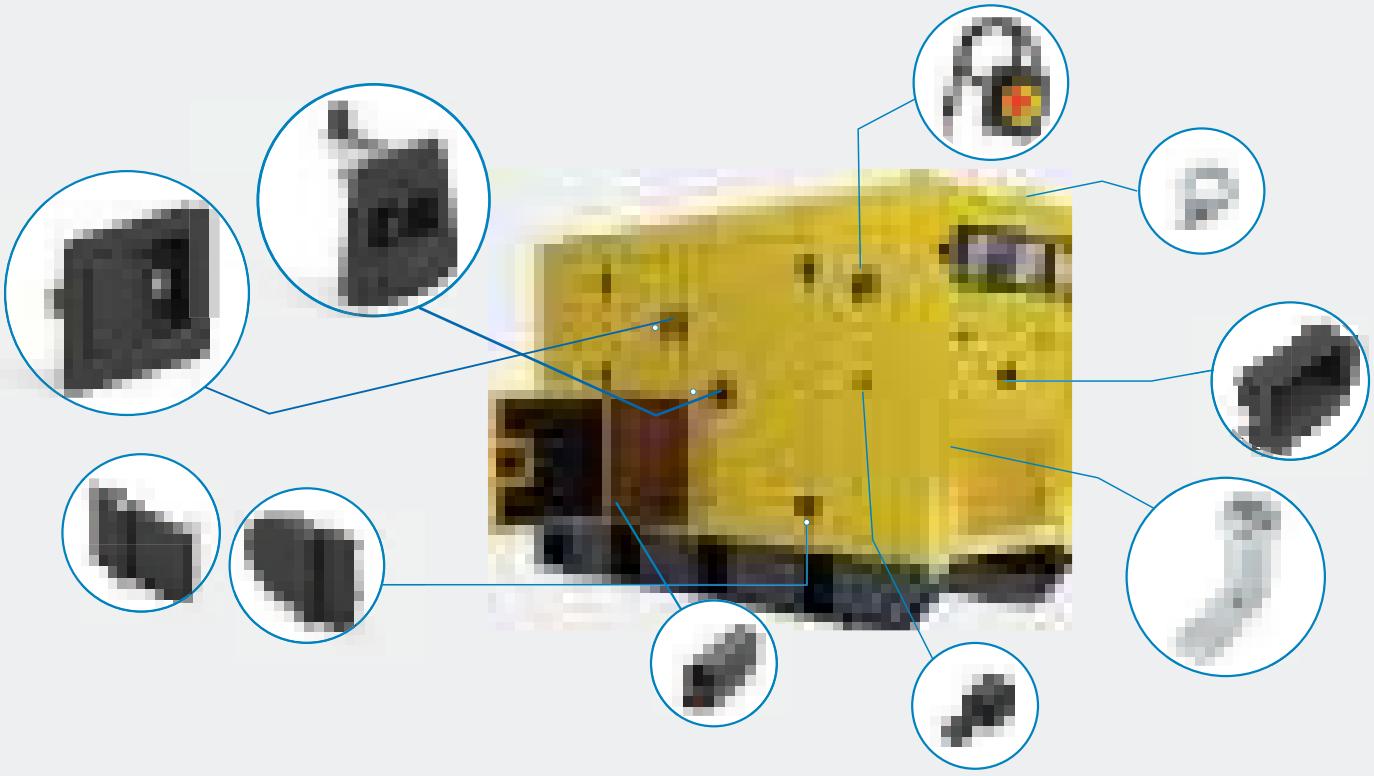

A CLOSER LOOK

TRANSFORMERS

When working with transformers, it's important that all entry points are kept secure, particularly areas that contain medium voltage cells. Our solutions are high quality and secure, including our technically designed explosion resistant hinges and locks.





A CLOSER LOOK

HVAC

Outdoor HVAC cabinets need to cope with the differing environments in which they are used while ergonomics,functionality and modular system solutions are common needs. Our solutions are designed with this in mind so no matter the application, our offering will meet your needs.



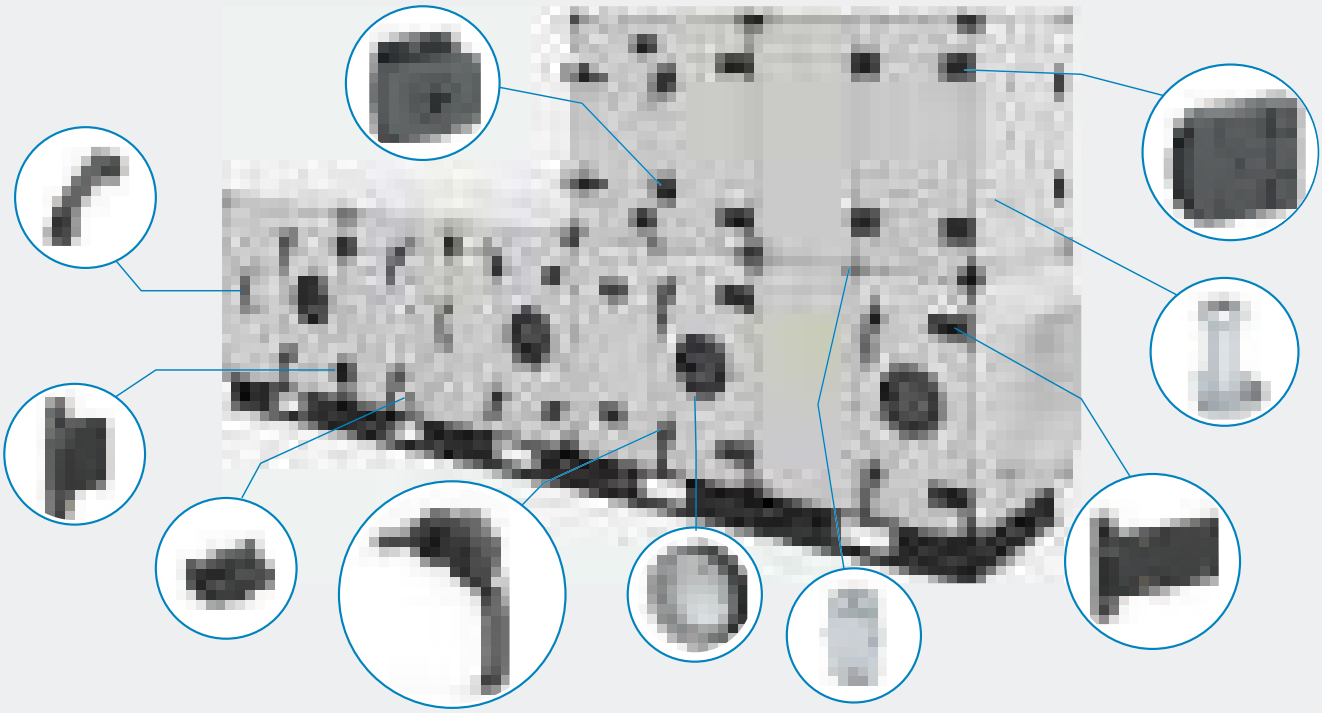

A CLOSER LOOK

IT CABINETS

With sensitive data becoming more and more prevalent, it's now more important than ever to securely manage your electronic cabinets. We've designed a range of high-tech Electromechanical Locking Systems to help monitor and track internal environments and entry to cabinets.





A CLOSER LOOK

INDUSTRIAL MACHINERY

Whether you're building indoor or outdoor machines, sealing,noise isolation and vibration reduction are some of your most important considerations. Mesan Locks offers a wide range of solutions designed to meet your specific requirements.



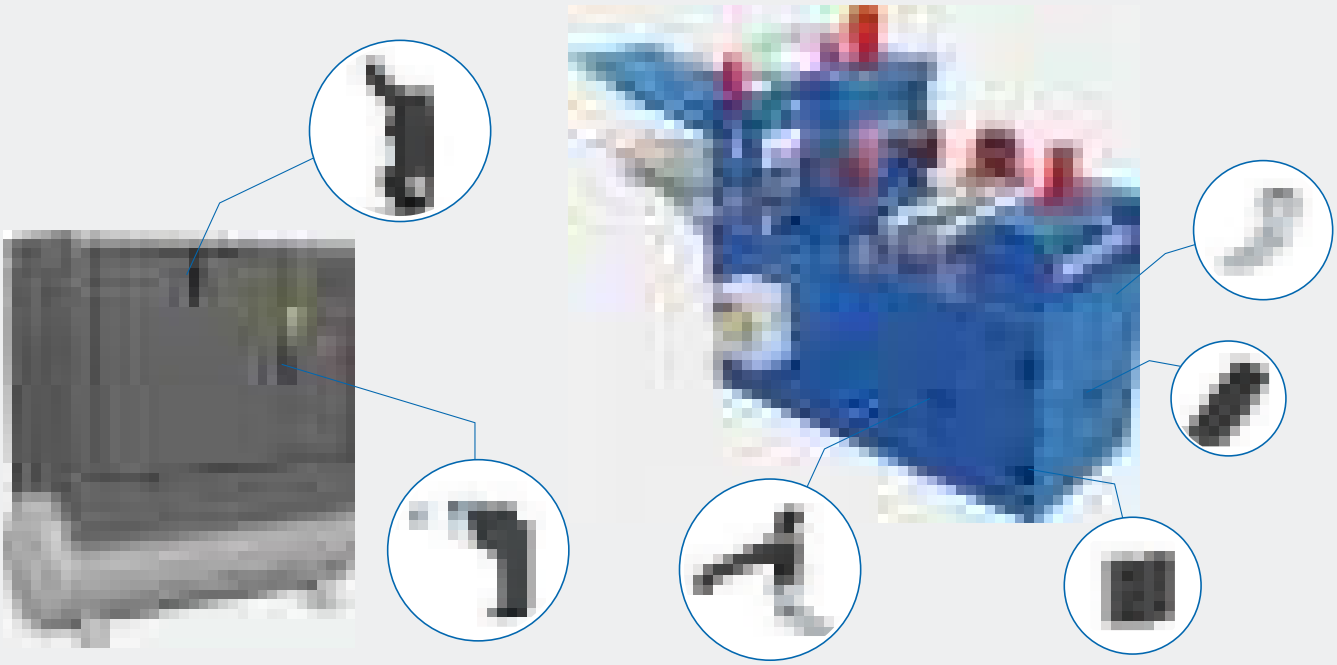

A CLOSER LOOK

DIVERSIFIED APPLICATIONS

Our expertise spans across many industries, allowing catered solutions to be produced for a number of non-standard applications.





A CLOSER LOOK

MEDICAL DEVICES

We offer a wide range of access solutions for the health industry, including essential equipment and medical With our mechanical and electronic locks, hinges, handles, accessories and fittings, we provide security, safety and comfort with hygienic standards to healthcare professionals.





A CLOSER LOOK

RAIL TRANSPORTATION

Suitable for both subway trains and high speed trains our compression latches, are certified to DIN EN 60068-2-64 [04/2011]. Many of our sealing products, trigger latches and heavy duty hinges are also UL 94 certified.



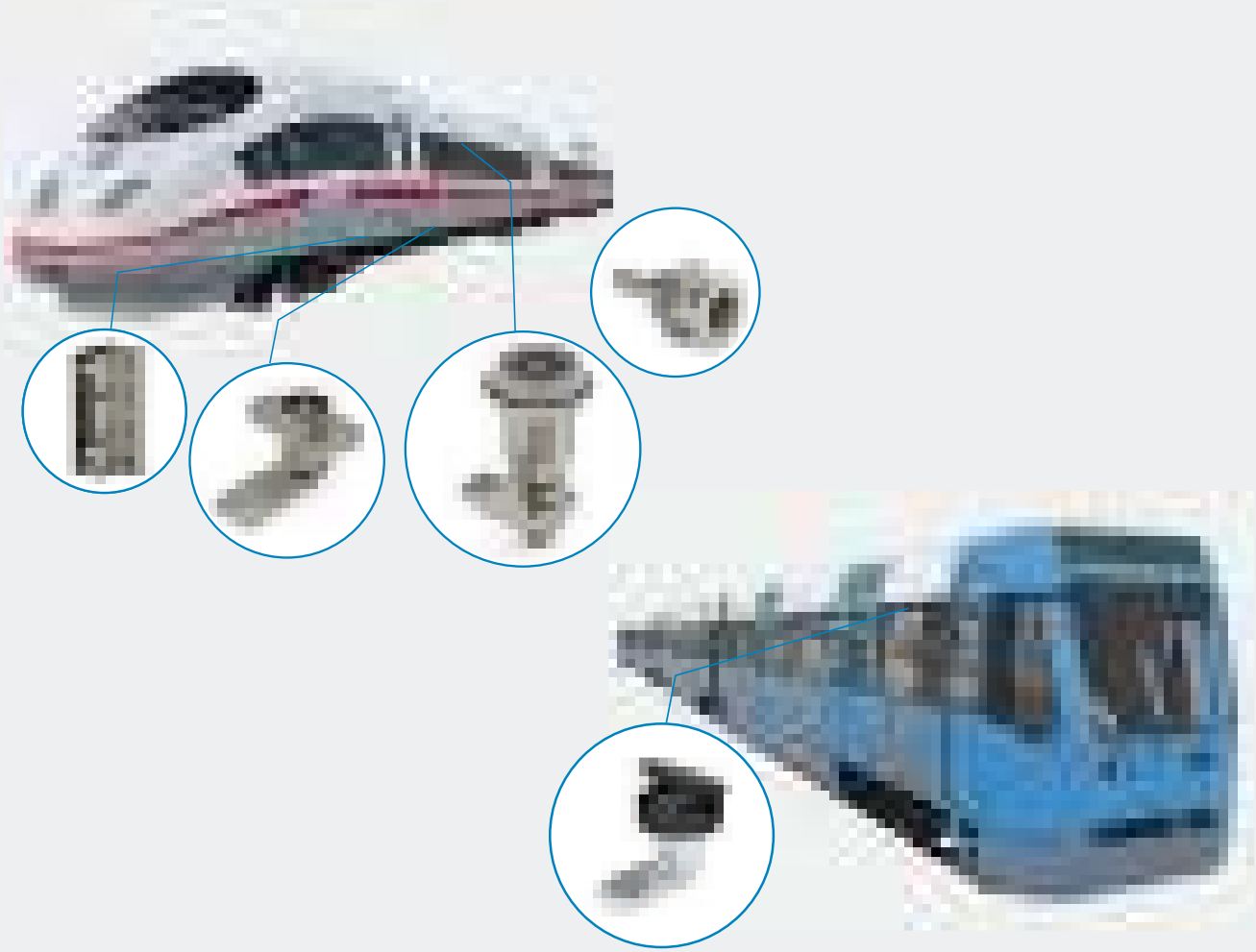

A CLOSER LOOK

COMMERCIAL VEHICLES

Construction vehicles, heavy-duty trucks and utility trucks all have one thing in common. They need robust and safe handles, locks and hinges. We provide these vehicles with pretty much any solutions you can think of for both the interior and exterior.





A CLOSER LOOK

ROAD TRANSPORTATION

We produce solutions for commercial car, caravans, minibus, and buses. Our range is specifically catered to the needs of these applications, offing paddle latches, quarter turn locks and latches, custom hinges, sealing products, and many other functional solutions.





e-mail | **info@mesanlocks.com** web | **www.mesanlocks.com**

JUST A FEW OF OUR **STANDARD PRODUCTS**

FOR ELECTRICAL

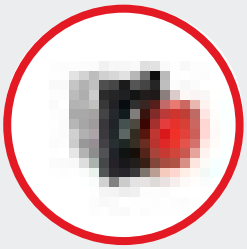

IP65 Push Buttons



Rocker Switch



Standard Grommets

FOR ENCLOSURES



Draw Slides



Adjustable Force Gas Struts

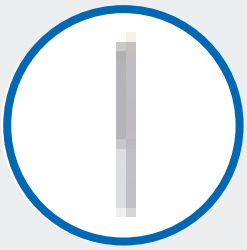

Metal Gas Struts

FOR EQUIPMENT CONTROL



Index Plunger



Cam Switches

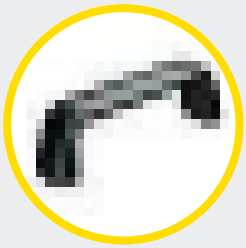

Handles

AND THERE IS MORE...



Masking Plugs

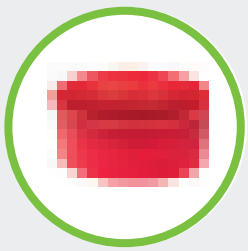

Tapered Caps

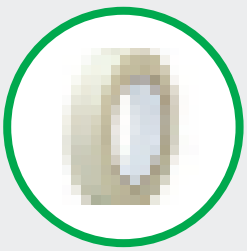

Masking Tapes

REQUEST OUR FULL COMPONENTS CATALOGUE!

OVER 30,000 STANDARD PRODUCTS FOR FAST DISPATCH

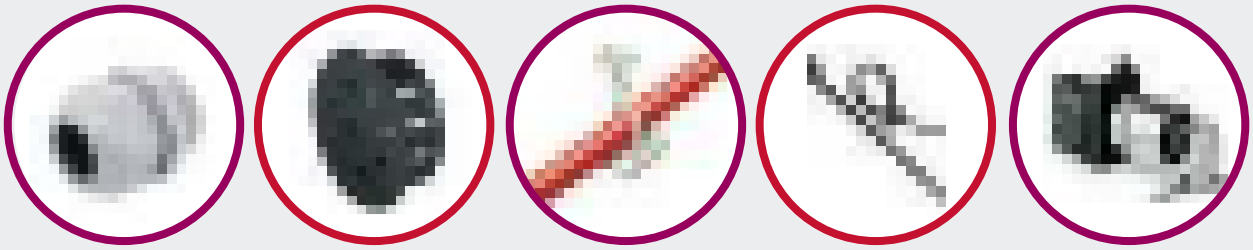

Nylon Cable Glands | Vent Plugs | Twist Ties | Cable Ties | Key Operated Push Button



EMI Gasket | Flipper Gasket | Side Bubble Gasket | Heavy Duty Lid Stay | Vibration Mounts

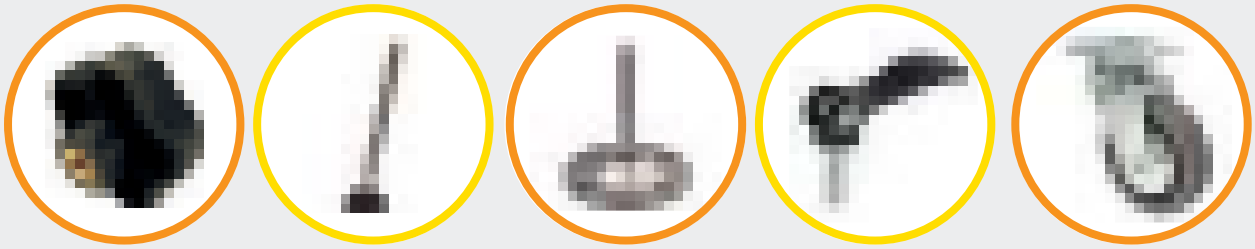

Handwheels | Industrial Feet | Machine Feet | Cam Levers | Castors

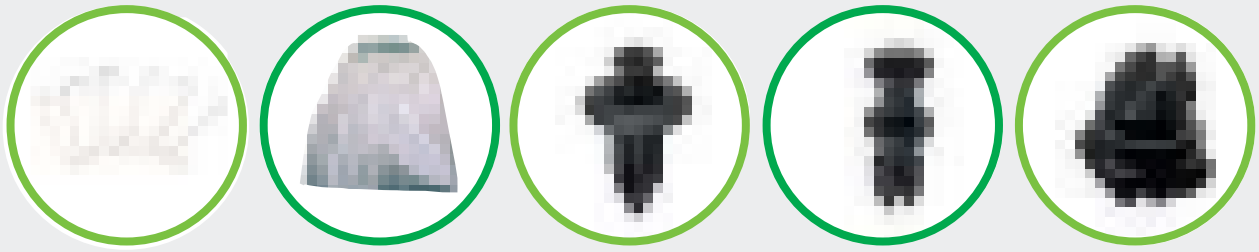

Support Hooks | Masking Bags | Screw Rivet Fasteners | Quarter Turn & Snap Latches | Rack Panel Quarter Turm Fastener

GO ONLINE:

- REQUEST FREE SAMPLES
- 3D CAD DRAWINGS
- ORDER ONLINE



PRODUCT GROUPS

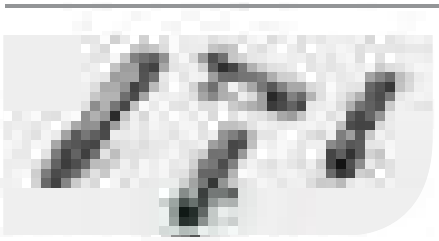

SWINGHANDLES
24 – 51

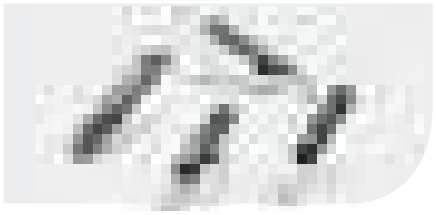

ROD-LATCH SYSTEM
52 – 87

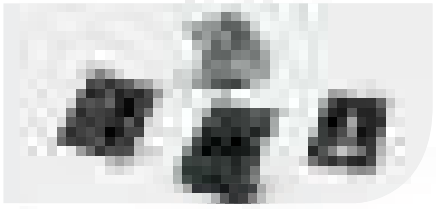

HEAVY-DUTY LOCKS
88 – 115

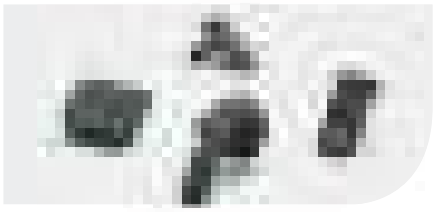

MISCELLANEOUS PRODUCTS
116 – 167

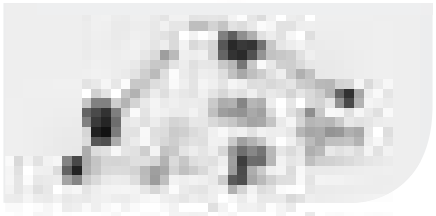

CAMS, KEYS, RODS & ROD GUIDES
168 – 191

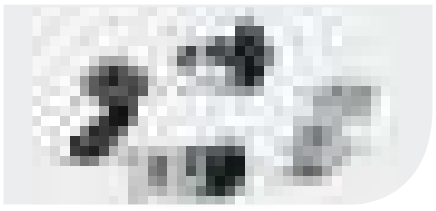

QUARTER-TURN LOCKS
192 – 245

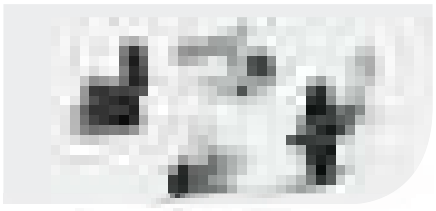

CAM LOCKS
246 – 271



FURNITURE & STEEL CUPBOARD LOCKS
272 – 285

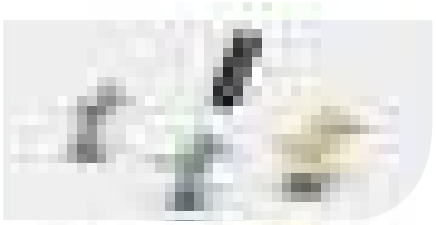

SIDE HINGES
286 – 299

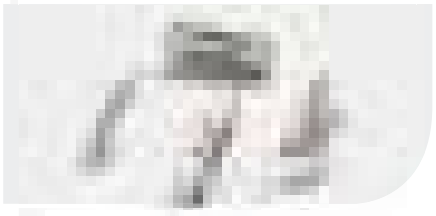

CONCEALED HINGES
300 – 333

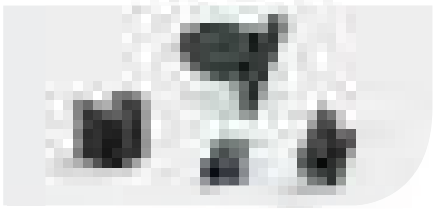

CORNER HINGES
334 – 351

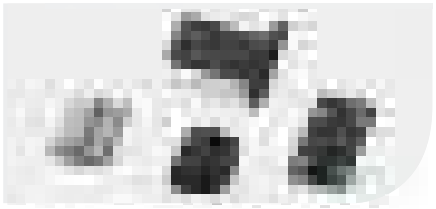

FLAT HINGES
352 – 385

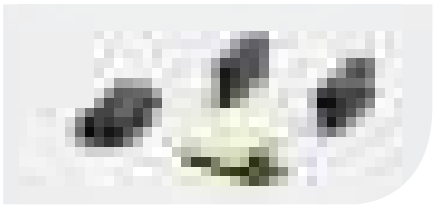

GASKETS
386 – 401

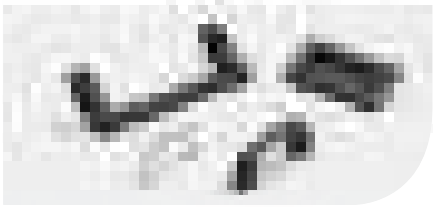

HANDLES
402 – 419



ACCESSORIES
420 – 441



STAINLESS STEEL PRODUCTS
442 – 517

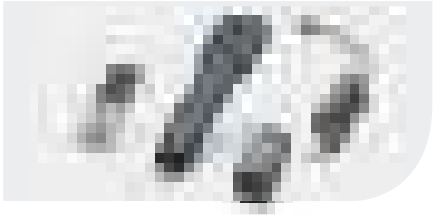

ELECTRONIC LOCKING SYSTEM
518 – 547

INFORMATION

PRODUCT CODE DESCRIPTIONS

DESCRIPTIONS	
	GROUP CODE
M	MATERIAL
F	FINISH
D D	CYLINDER - DRIVER
C C	CAM
V	VERSION
D T	DOOR THICKNESS
L	LENGTH
H	HEIGHT
L H	HOUSING LENGTH
P	PIN
001	RIGHT HAND
002	LEFT HAND
1	OPTIONAL / IP 65
1	OPTIONAL / PADLOCK HASP
2	OPTIONAL / DUST CAP
12	OPTIONAL / PADLOCK HASP + DUST CAP

MATERIALS AND FINISH OPTIONS

M — MATERIAL

1	Zamak
2	Plastic
3	Brass
4	Stainless steel
5	Aluminium
6	Steel

F — FINISH

0	No finish
1	Chrome
2	Black coated
3	Zinc plated
7	Matt anodized

EXAMPLE PRODUCT CODE

Group Code	Housing		Knob		Cam
062	M	F	M	F	CC
↓	↓	↓	↓	↓	↓
062	1	1	2	0	42

062	Quarter turn – wing knob
1	Zamak material (Housing)
1	Chrome plated (Housing)
2	Plastic material (Knob)
0	No Finish (Knob)
42	Cam: 7x49 mm

TECHNICAL DRAWING DESCRIPTIONS

H: Grip
LH: Housing length
CL: Cam length
CH: Cam height

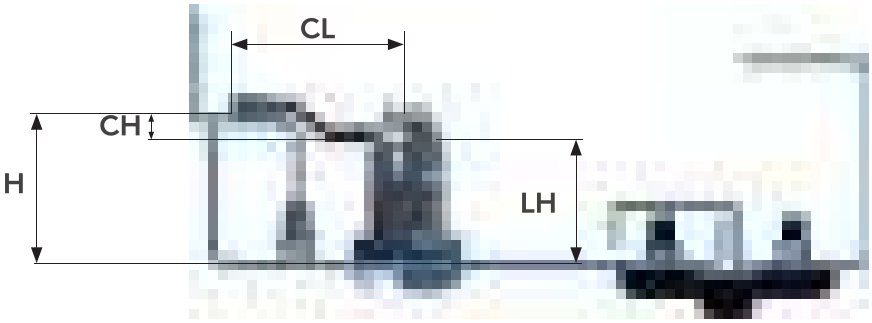

DOOR-LOCKING DIRECTIONS



Left hand

Right hand

SYMBOLS

RoHS Compliant	Foam gasketing	Position control
Anti Bacterial	Clip-in assembling	Lift-off hinge
IP 65 sealing level	Padlock version	Side hinge
IP 66 sealing level	Profile cylinder	Concealed hinge
IP 54 sealing level	Outside the gasketing	Corner hinge
Suitable for left or right hand	Inside the gasketing	Flat hinge
Left hand only	Compression specification of lock	Three dimensions
Right hand only	Earthing	Two dimensions

EXPLANATIONS

* All dimensions are in millimetres (mm)
* We comply with RoHS
* Finishes comply with TS EN 12540
* We reserve the right to make changes to product specifications without prior notice
* Our polyamide products and EPDM gasket products can be produced as flame resistant to comply with the UL94 standard
* All images, text and designs contained within this catalogue remain the copyright of Essentra Components

FAST FIND INDEX

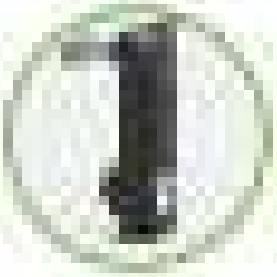
26


27

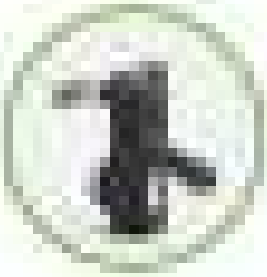
28

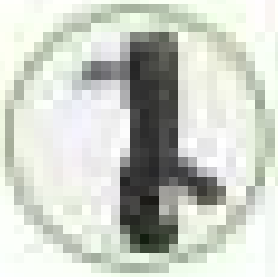
29

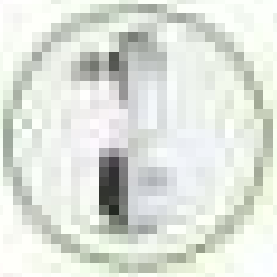
30


31

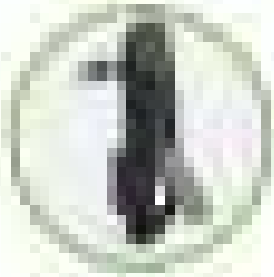
32-33

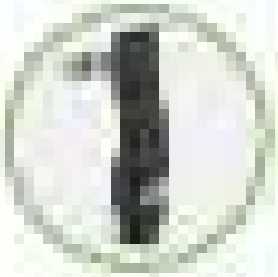
34

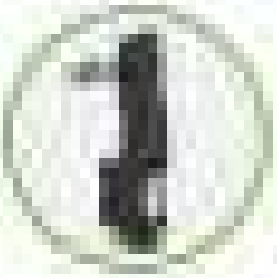
35

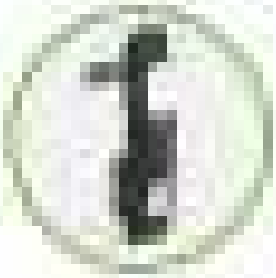
36-37

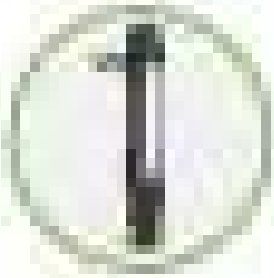
38

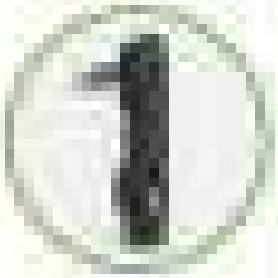
39

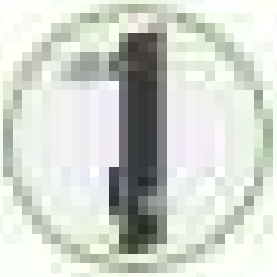
40


41

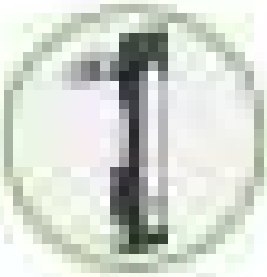
42

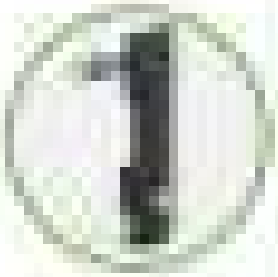
43

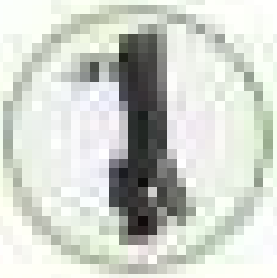
44-45

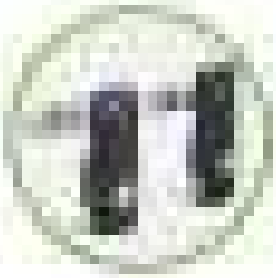
46-47

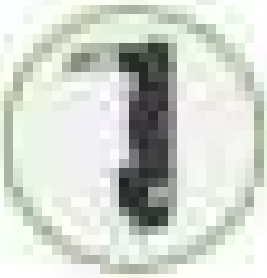
48

NEW


49-50



SWINGHANDLES

24-51

mesan
ESSENTRA COMPONENTS

e-mail | info@mesanlocks.com web | www.mesanlocks.com

SWINGHANDLES

SWINGHANDLE 001



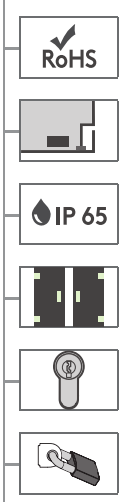

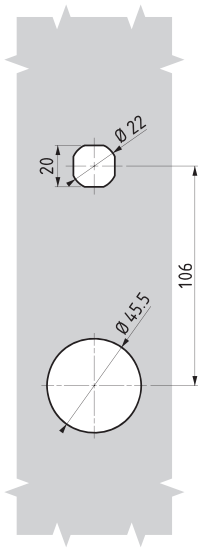

Cut Out

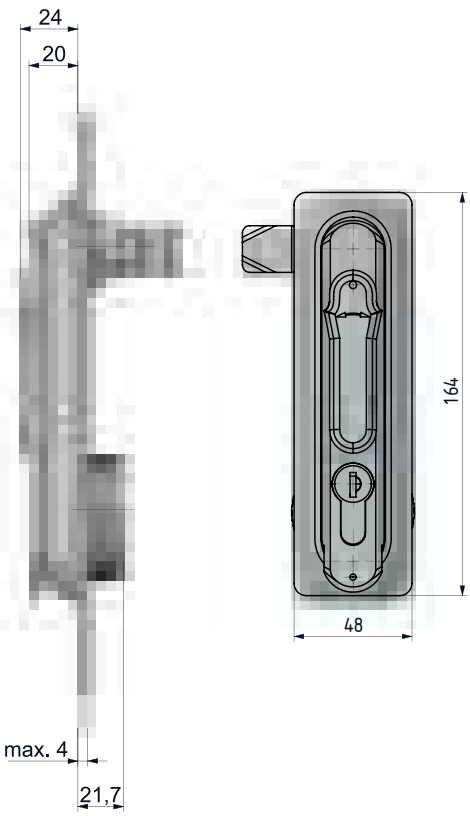

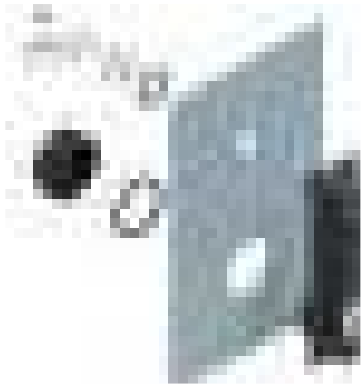

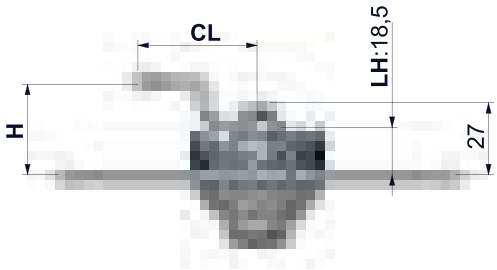

- **Small version: page 28**
- For steel and polyester cabinets
- 40 mm Euro Profile single-cylinder fitted
- For 42 mm Euro Profile single-cylinder contact Essentra

MATERIAL

BODY:	Polyamide DIN-EN ISO 1043-1 PA6 GFR 30
HANDLE:	Polyamide DIN-EN ISO 1043-1 PA6 GFR 30
CYLINDER:	Zamak DIN-EN 1774-ZnAl4Cu1
CAM:	Steel
SEAL:	Rubber



Padlock application

CYLINDER TYPE	DD
Keyed alike (Stainless steel dust cap)	03
Keyed differ (Stainless steel dust cap)	32
Master system	04
Euro key (5333)	05
CH751 (Stainless steel dust cap)	07
DRIVER TYPE	**DD**
5 mm Double bit	15
8 mm Square	28
9 mm Triangular	39
Eastern	91
HIGH-SECURITY CYLINDER (Zamak)	**DD**
Keyed alike	22
Keyed differ	23
NO CYLINDER	**DD**
Plastic blind cylinder	24

Group Code	Driver Cylinder	Cam	Padlock*
001	DD	CC	

*: add **"1"** for padlock application

For cams please check pages: 170 - 171
For keys please check pages: 189 - 191
For rods please check pages 178 - 188

tel | +90 212 721 44 44 fax | +90 212 721 44 45

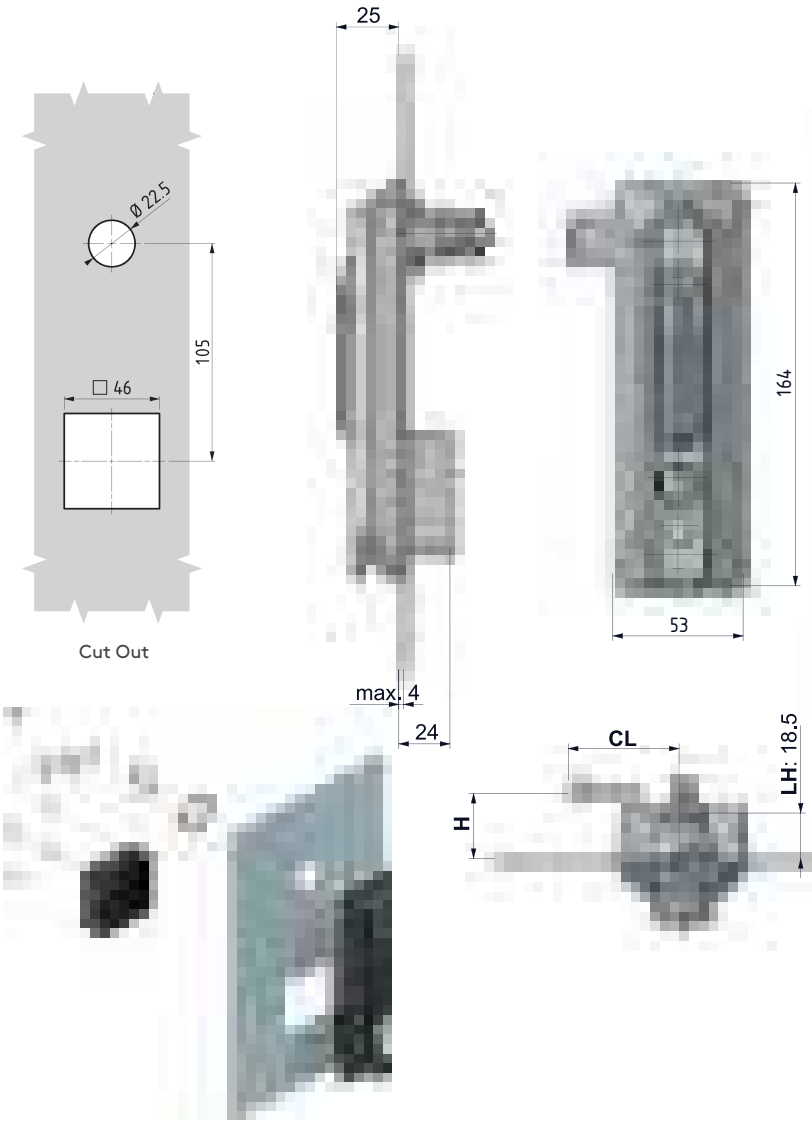

201 SWINGHANDLE

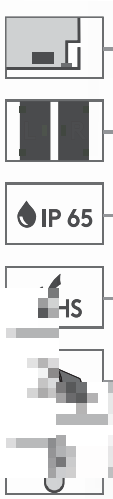



- For steel and polyester cabinets
- 40 mm Euro Profile single-cylinder fitted
- For 42 mm Euro Profile single-cylinder contact Essentra

MATERIAL

BODY:	Polyamide DIN-EN ISO 1043-1 PA6 GFR 30
HANDLE:	Polyamide DIN-EN ISO 1043-1 PA6 GFR 30
TOZ K.:	Zamak DIN-EN 1774-ZnAl4Cu1
CYLINDER:	Zamak DIN-EN 1774-ZnAl4Cu1
CAM:	Steel
SEAL:	Rubber



Padlock application

CYLINDER TYPE		DD
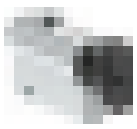	Keyed alike (Stainless steel dust cap)	03
	Keyed differ (Stainless steel dust cap)	32
	Master system	04
	Euro key (5333)	05
	CH751 (Stainless steel dust cap)	07
DRIVER TYPE		**DD**
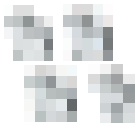	5 mm Double bit	15
	8 mm Square	28
	9 mm Triangular	39
	Eastern	91
HIGH-SECURITY CYLINDER (Zamak)		**DD**
	Keyed alike	22
	Keyed differ	23
NO CYLINDER		**DD**
	Plastic blind cylinder	24

Group Code	Driver Cylinder	Cam	Padlock*
201	DD	CC	

***:** add **"1"** for padlock application

For cams please check pages: 170 - 171
For keys please check pages: 189 - 191
For rods please check pages 178 - 188

SWINGHANDLES

SWINGHANDLE 001

SMALL VERSION



RoHS

IP 65

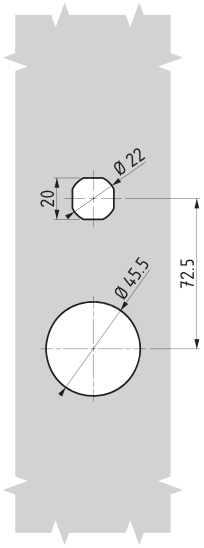

Cut Out

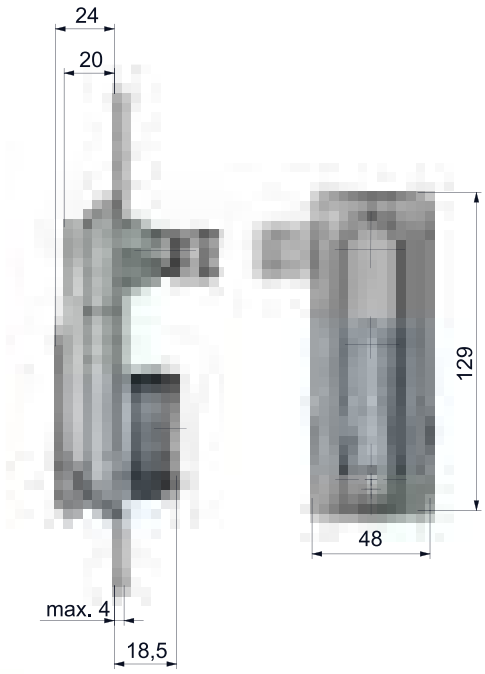

- **Large version: page 26**
- For steel and polyester cabinets
- 40 mm Euro Profile single-cylinder fitted

MATERIAL

BODY:	Polyamide DIN-EN ISO 1043-1 PA6 GFR 30
HANDLE:	Polyamide DIN-EN ISO 1043-1 PA6GFR 30
CYLINDER:	Zamak DIN-EN 1774-ZnAl4Cu1
CAM:	Steel
SEAL:	Rubber

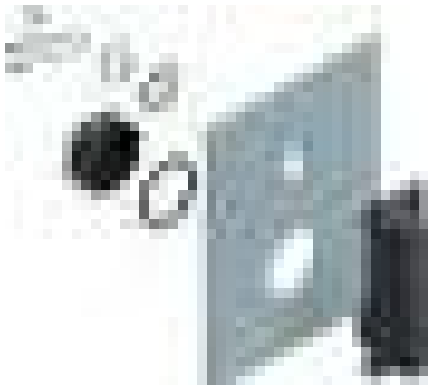

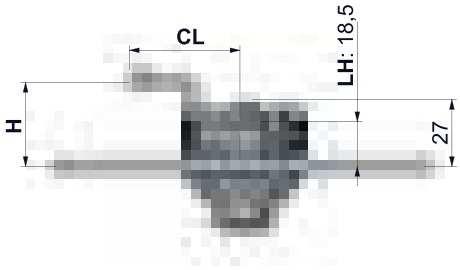

CYLINDER TYPE		DD
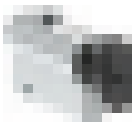	Keyed alike (Stainless steel dust cap)	03
	Keyed differ (Stainless steel dust cap)	32
	Master system	04
	Euro key (5333)	05
	CH751 (Stainless steel dust cap)	07
DRIVER TYPE		**DD**
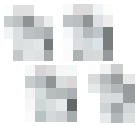	5 mm Double bit	15
	8 mm Square	28
	9 mm Triangular	39
	Eastern	91
HIGH-SECURITY CYLINDER (Zamak)		**DD**
	Keyed alike	22
	Keyed differ	23
NO CYLINDER		**DD**
	Plastic blind cylinder	24

Group Code	Version	Cylinder	Cam
001	2	DD	CC

For cams please check pages: 170 - 171

For keys please check pages: 189 - 191

For rods please check pages 178 - 188

tel | +90 212 721 44 44 fax | +90 212 721 44 45

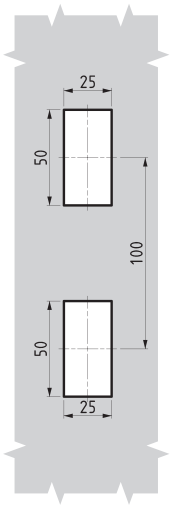

Cut Out

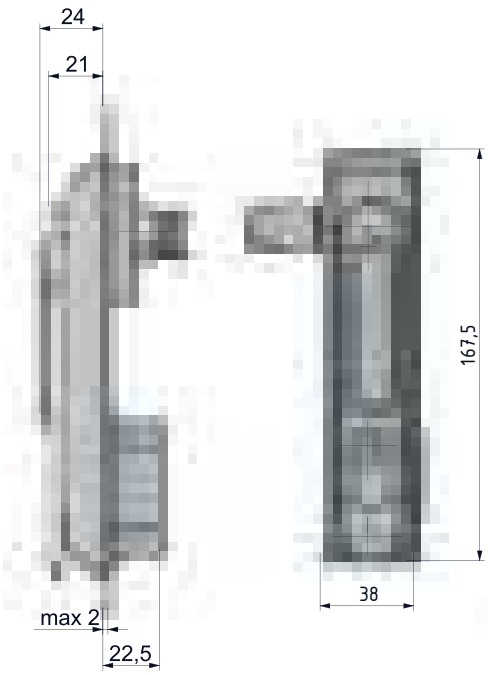

101 SWINGHANDLE

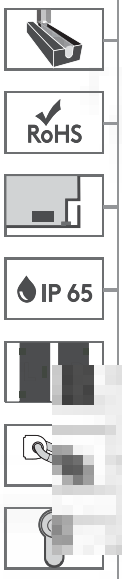



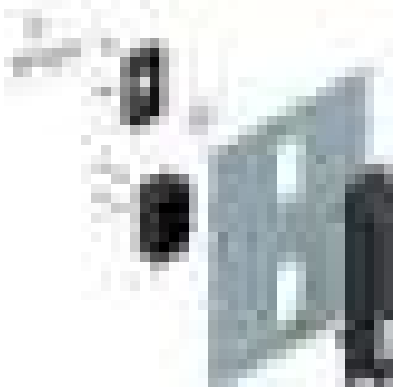

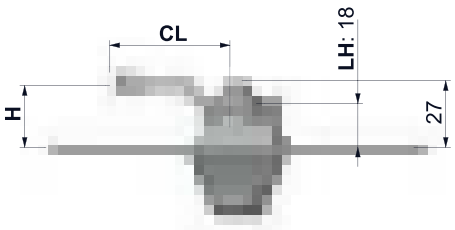

- Swinghandle for steel and polyester cabinets
- 40 mm Euro Profile single-cylinder fitted
- Padlockable version available
- For 42 mm Euro Profile single-cylinder contact Essentra

MATERIAL

BODY:	Polyamide DIN-EN ISO 1043-1 PA6 GFR 30
HANDLE:	Polyamide DIN-EN ISO 1043-1 PA6GFR 30
CYLINDER:	Zamak DIN-EN 1774-ZnAl4Cu1
CAM:	Steel
SEAL:	Rubber



Padlock application

CYLINDER TYPE		DD
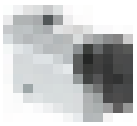	Keyed alike (Stainless steel dust cap)	03
	Keyed differ (Stainless steel dust cap)	32
	Master system	04
	Euro key (5333)	05
	CH751 (Stainless steel dust cap)	07
DRIVER TYPE		**DD**
	5 mm Double bit	15
	8 mm Square	28
	9 mm Triangular	39
	Eastern	91
HIGH-SECURITY CYLINDER (Zamak)		**DD**
	Keyed alike	22
	Keyed differ	23
NO CYLINDER		**DD**
	Plastic blind cylinder	24

Group Code	Driver Cylinder	Cam	Padlock*
101	DD	CC	

***:** add **"1"** for padlock application

For cams please check pages: 170 - 171
For keys please check pages: 189 - 191
For rods please check pages 178 - 188

SWINGHANDLES

SWINGHANDLE 501

ALL IN METAL





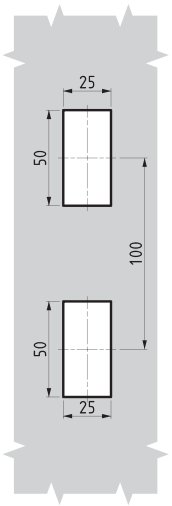

Cut Out

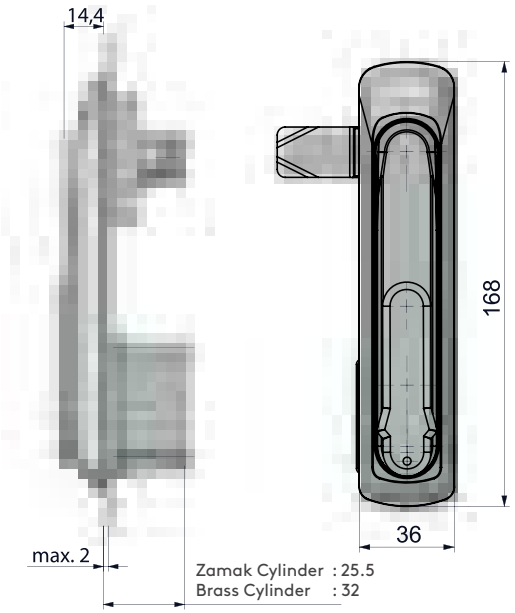

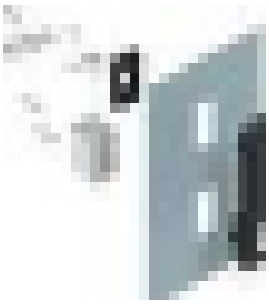

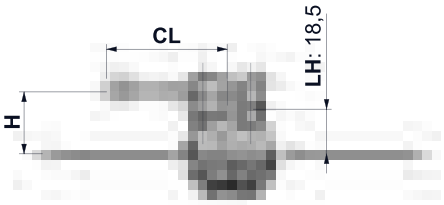

- **Stainless steel version: page 445**
- Die-cast construction stronger than polyamide
- Thin external profile, 14.4 mm, for flush appearance
- High-security, brass, Euro Profile single-cylinder available
- Dust cap available
- Padlockable version available
- For customised colours contact Essentra

MATERIAL

BODY:	Zamak DIN-EN 1774-ZnAl4Cu1
HANDLE:	Zamak DIN-EN 1774-ZnAl4Cu1
CAM:	Steel
SEAL:	Polyurethane
PADLOCK HASP:	Stainless steel

Note: Special espagnolette cam should be used for this application. Please check page 177.



O:1 Dust cap application



O:2 Padlock application



O:12 Dust cap + Padlock application

CYLINDER TYPE		DD
	Keyed alike (Stainless steel dust cap)	03
	Keyed differ (Stainless steel dust cap)	32
	CH751 (Stainless steel dust cap)	07
DRIVER TYPE		**DD**
	5 mm Double bit	15
	8 mm Square	28
	9 mm Triangular	39
	Eastern	91
BRASS CYLINDER		**DD**
	Keyed alike	11
HIGH-SECURITY CYLINDER (Zamak)		**DD**
	Keyed alike	22
	Keyed differ	23

MATERIAL	M	FINISH	F
Zamak	1	Chrome plated	1
		Black coated	2

Group Code	Handle		Body		Cylinder	Cam	Option
501	1	F	1	F	DD	CC	O

For cams please check pages: 170 - 171
For rods please check pages 178 - 188
For keys please check pages: 189 - 191

tel | +90 212 721 44 44 fax | +90 212 721 44 45

601 SWINGHANDLE

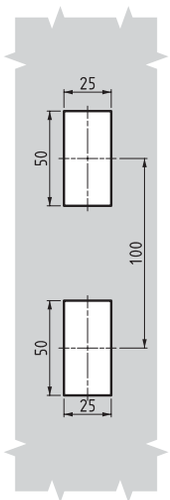

Cut Out

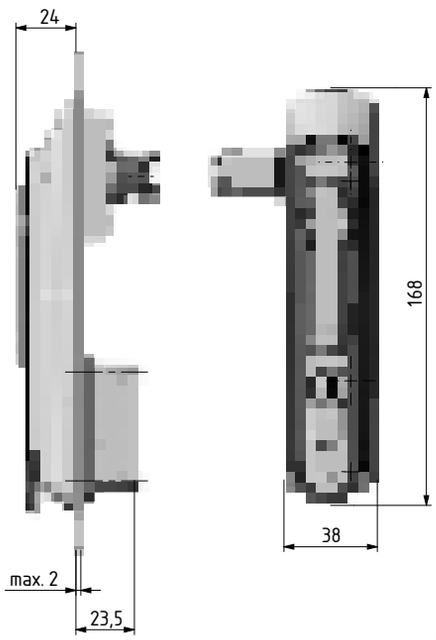

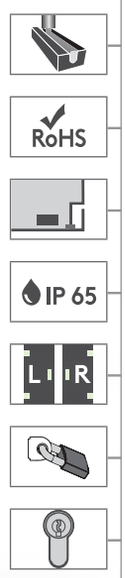

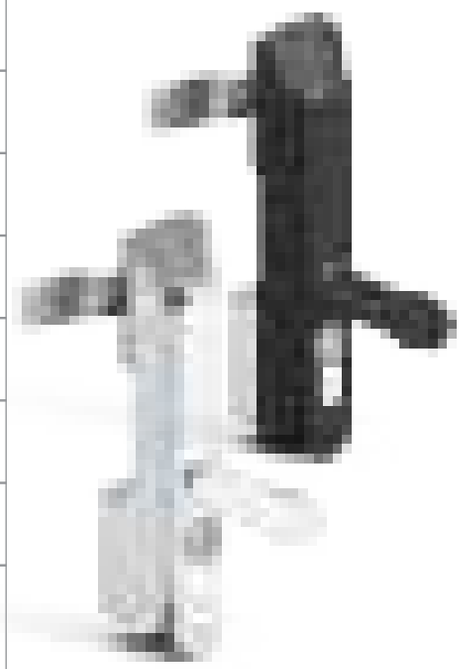



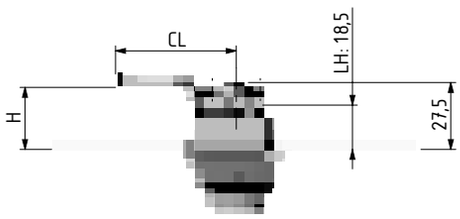

- All metal construction
- Swinghandle for steel and polyester cabinets
- 40 mm Euro Profile single -cylinder fitted
- Improved corrosion resistance
- High-security, brass, Euro Profile single-cylinder available

MATERIAL

BODY:	Zamak DIN-EN 1774-ZnAl4Cu1
HANDLE:	Zamak DIN-EN 1774-ZnAl4Cu1
COVER:	Zamak DIN-EN 1774-ZnAl4Cu1
SEAL:	Polyurethane

CYLINDER TYPE		DD
	Keyed alike (Stainless steel dust cap)	03
	Keyed differ (Stainless steel dust cap)	32
	CH751 (Stainless steel dust cap)	07
DRIVER TYPE		**DD**
	5 mm Double bit	15
	8 mm Square	28
	9 mm Triangular	39
	Eastern	91
BRASS CYLINDER		**DD**
	Keyed alike	11
HIGH-SECURITY CYLINDER (Zamak)		**DD**
	Keyed alike	22
	Keyed differ	23

MATERIAL	M	FINISH	F
Zamak	1	Chrome plated	1
		Black coated	2

Group Code	Handle		Body		Cylinder	Cam	Padlock*
601	1	F	1	F	DD	CC	

***:** add **"1"** for padlock application



Padlock application

For cams please check pages: 170 - 171
For rods please check pages 178 - 188
For keys please check pages: 189 - 191

SWINGHANDLES

SWINGHANDLE 408

ALL IN METAL



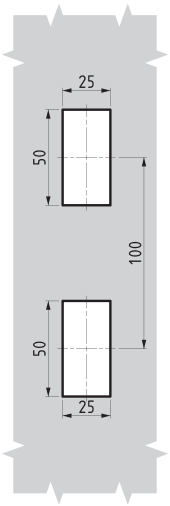

Cut Out

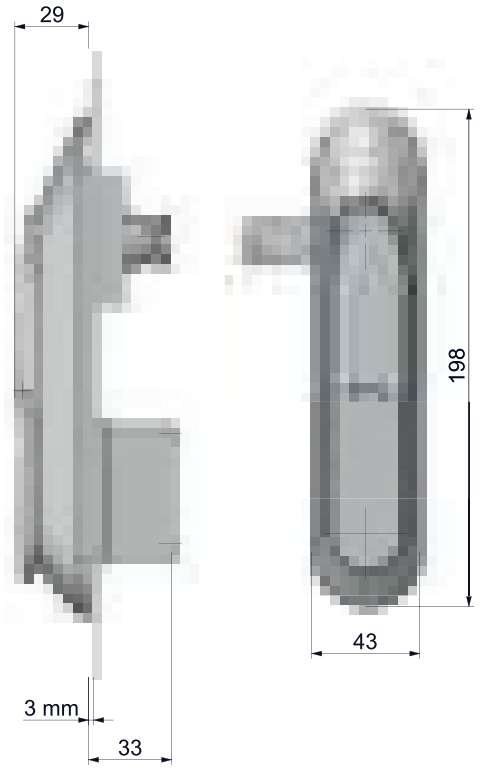



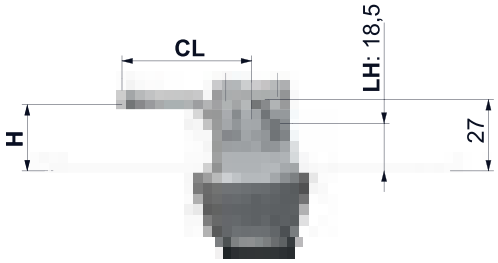

- All metal construction
- Special geometry protects against vandalism
- **Complies with DIN EN 1627: 2011-09 RC2 test**
- Double o-ring handle improves IP rating
- High-security cylinder alternative available
- Improved IP rating with moving dust cap

MATERIAL

BODY:	Zamak DIN-EN 1774-ZnAl4Cu1
HANDLE:	Zamak DIN-EN 1774-ZnAl4Cu1
CAM:	Steel
SEAL:	Polyurethane
COVER:	Zamak DIN-EN 1774-ZnAl4Cu1

CYLINDER TYPE		DD
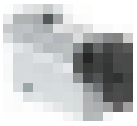	Keyed alike (Stainless steel dust cap)	03
	Keyed differ (Stainless steel dust cap)	32
	Master system	04
	Euro key (5333)	05
	CH751 (Stainless steel dust cap)	07
DRIVER TYPE		**DD**
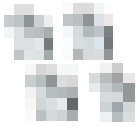	5 mm Double bit	15
	8 mm Square	28
	9 mm Triangular	39
	Eastern	91
HIGH-SECURITY CYLINDER (Zamak)		**DD**
	Keyed alike	22
	Keyed differ	23

MATERIAL	M	FINISH	F
Zamak	1	Black coated	2

Group Code	Version	Handle		Body		Cylinder	Cam
408	1	1	2	1	2	DD	CC

For cams please check pages: 170 - 171

For rods please check pages 178 - 188

For keys please check pages: 189 - 191

tel | +90 212 721 44 44 fax | +90 212 721 44 45

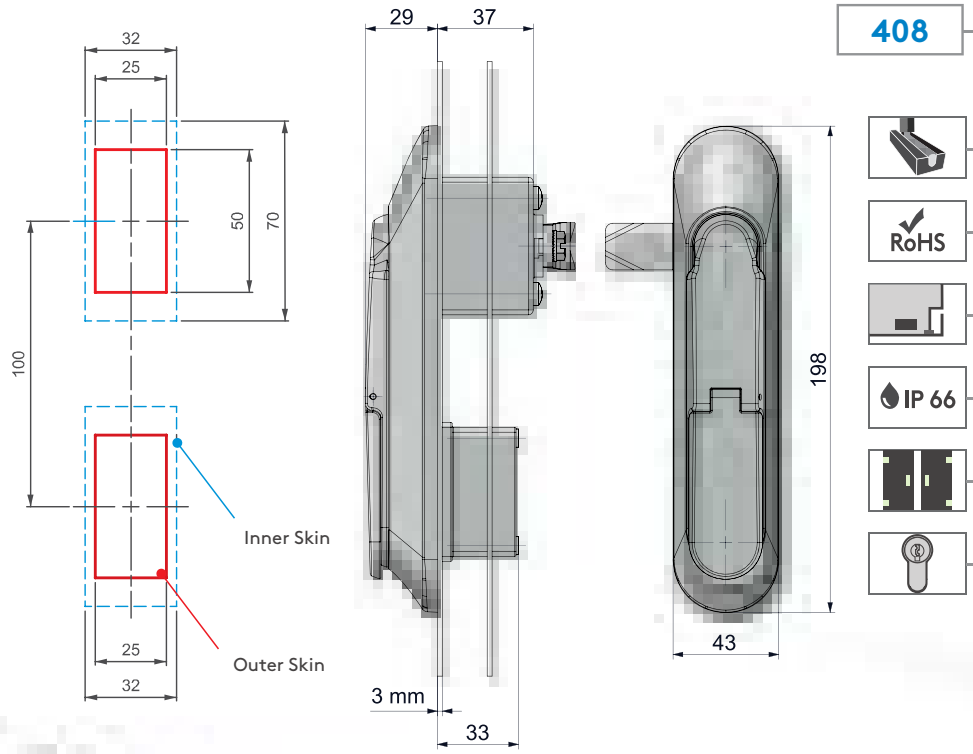



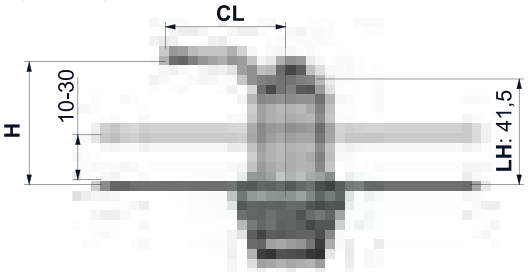

The Swinghandle can be modified per double skin panel thickness.

408 SWINGHANDLE

ALL IN METAL



- All metal construction
- Special geometry for protection against vandalism
- **Complies with DIN EN 1627: 2011-09 RC2 test**
- Double o-ring handle improves IP rating
- High-security cylinder alternative
- Improves IP rating with moving dust cap

MATERIAL

BODY:	Zamak DIN-EN 1774-ZnAl4Cu1
HANDLE:	Zamak DIN-EN 1774-ZnAl4Cu1
CAM:	Steel
SEAL:	Polyurethane
COVER:	Zamak DIN-EN 1774-ZnAl4Cu1

CYLINDER TYPE		DD
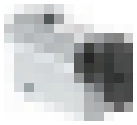	Keyed alike (Stainless steel dust cap)	03
	Keyed differ (Stainless steel dust cap)	32
	Master system	04
	Euro key (5333)	05
	CH751 (Stainless steel dust cap)	07
DRIVER TYPE		**DD**
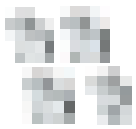	5 mm Double bit	15
	8 mm Square	28
	9 mm Triangular	39
	Eastern	91
HIGH-SECURITY CYLINDER (Zamak)		**DD**
	Keyed alike	22
	Keyed differ	23

MATERIAL	M	FINISH	F
Zamak	1	Black coated	2

Group Code	Version	Handle		Body		Cylinder	Cam
408	3	1	2	1	2	DD	CC

For cams please check pages: 170 - 171
For rods please check pages 178 - 188
For keys please check pages: 189 - 191

SWINGHANDLES

SWINGHANDLE 306



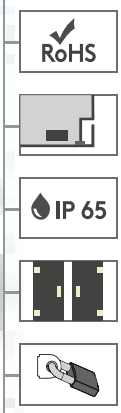

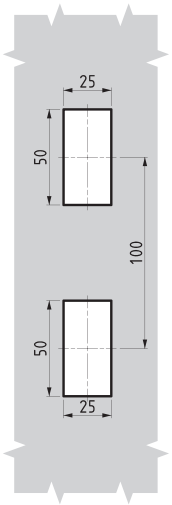

Cut Out

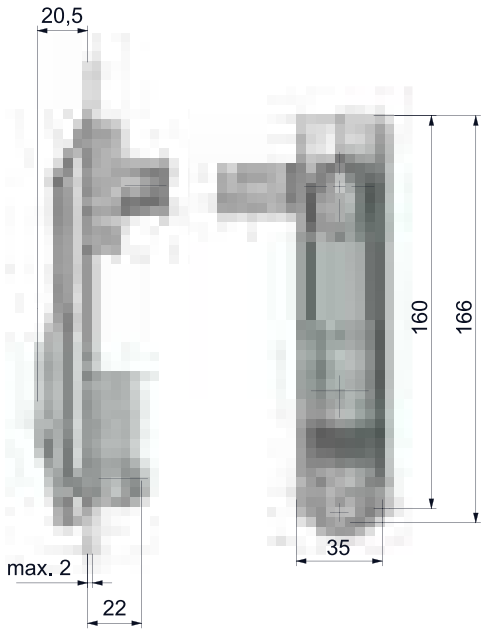

- Sliding dust cover
- Ergonomic handle
- Padlockable version available.

MATERIAL

BODY:	Polyamide DIN-EN ISO 1043-1 PA6 GFR 30
HANDLE:	PA6 GFR 30 or Zamak
CAM:	Steel – PA6 GFR 30
SEAL:	Polyurethane



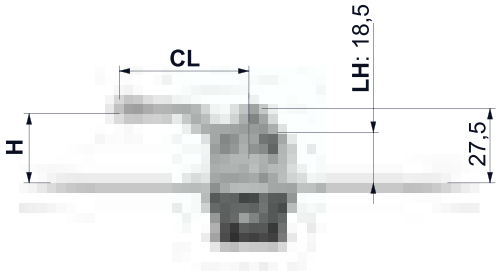



Padlock application

Special sliding cover is available for padlockable version

CYLINDER TYPE	DD
Keyed alike (Stainless steel dust cap)	03
Keyed differ (Stainless steel dust cap)	32
Euro key (5333)	05
CH751 (Stainless steel dust cap)	07
DRIVER TYPE	**DD**
5 mm Double bit	15
8 mm Square	28
9 mm Triangular	39

MATERIAL	M	FINISH	F
Zamak	1	Chrome plated	1
		Black coated	2
Plastic	2	No finish	0

Group Code	Handle		Body		Driver Cylinder	Cam	Padlock*
306	M	F	2	0	DD	CC	

*: add "1" for padlock application

For cams please check pages: 170 - 171
For rods please check pages 178 - 188
For keys please check pages: 189 - 191

tel | +90 212 721 44 44 fax | +90 212 721 44 45

206 SWINGHANDLE

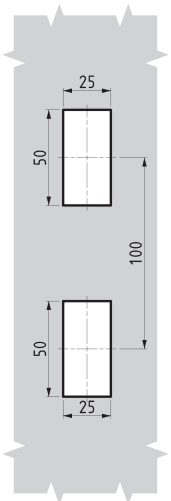

Cut Out



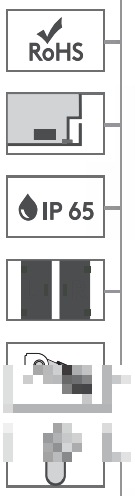

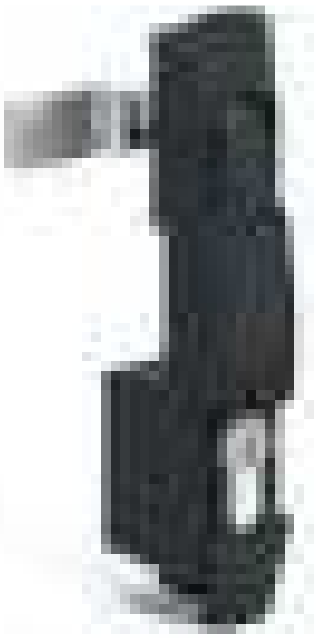

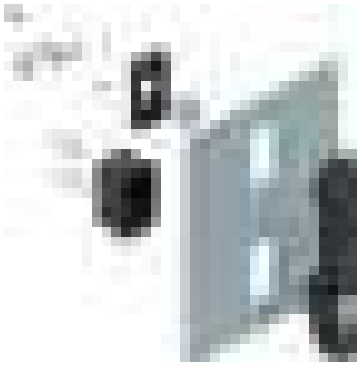

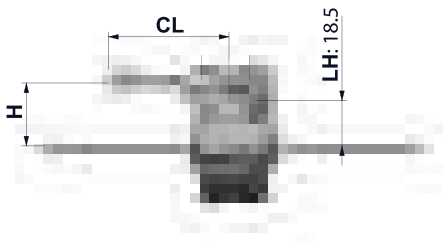

- Sliding dust cover
- Ergonomic handle
- Padlockable version available
- 40 mm Euro Profile cylinder fitted

MATERIAL

BODY:	Polyamide DIN-EN ISO 1043-1 PA6 GFR 30
HANDLE:	Polyamide DIN-EN ISO 1043-1 PA6 GFR 30
CAM:	Steel
SEAL:	Polyurethane

CYLINDER TYPE		DD
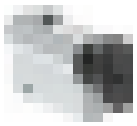	Keyed alike (Stainless steel dust cap)	03
	Keyed differ (Stainless steel dust cap)	32
	Master system	04
	Euro key (5333)	05
	CH751 (Stainless steel dust cap)	07
DRIVER TYPE		**DD**
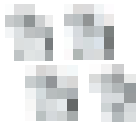	5 mm Double bit	15
	8 mm Square	28
	9 mm Triangular	39
	Eastern	91
BRASS CYLINDER		**DD**
	Keyed alike	11
NO CYLINDER		**DD**
	Plastic blind cylinder	24

Group Code	Handle		Body		Cylinder	Cam	Padlock*
206	2	0	2	0	DD	CC	

*: add "1" for padlock application



Padlock application

Special sliding cover is available for padlockable version

For cams please check pages: 170 - 171
For rods please check pages 178 - 188
For keys please check pages: 189 - 191

SWINGHANDLES

MODULAR SYSTEM SWINGHANDLE

406

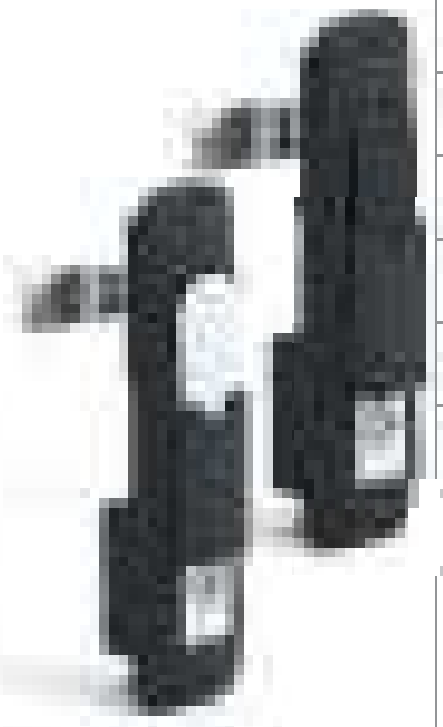

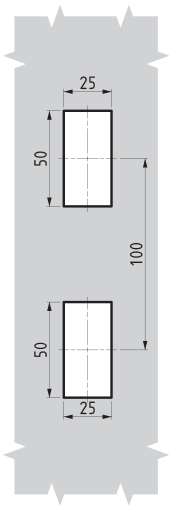

Cut Out

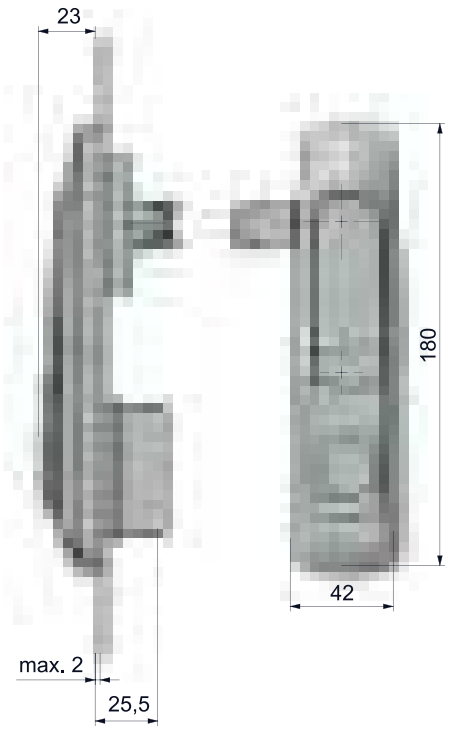

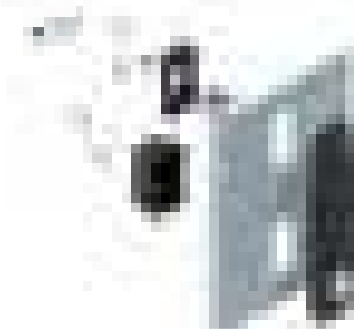

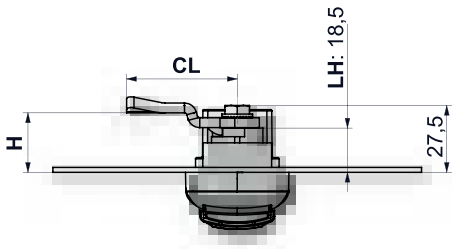

- Swing handle has a modular lock structure allows easy modification for customer requests
- Lock and modules could be ordered seperately
- Single point locking and gearbox option is possible on same lock by an adaptor
- Padlock is optional
- Easy fixing option by plastic clips

MATERIAL

BODY	PA6 GFR 30
HANDLE	Zamak DIN-EN 1774-ZnAl4Cu1
CAM:	Steel
MODULE	Zamak
SEAL:	Polyurethane



Padlock application

CYLINDER TYPE	DD	Order code
Stainless steel dust cap (Keyed alike)	03	MDL03
Stainless steel dust cap (Keyed differ)	32	MDL32
Euro key (5333)	05	MDL05
CH751 (Stainless steel dust cap)	07	MDL07
DRIVER TYPE	**DD**	**Order code**
5 mm Double bit	15	MDL15
8 mm Square	28	MDL28
9 mm Triangular	39	MDL39
Button	55	MDL55
BRASS CYLINDER	**DD**	**Order code**
Keyed alike	11	MDL11

MATERIAL	M	FINISH	F
Zamak	1	Chrome plated	1
		Black coated	2
Plastic	2	No finish	0

Group Code	Handle		Body		Module	Cam	Assembly	Padlock*
406	1	F	2	0	DD	CC	A	

*: add **"1"** for padlock application

For cams please check pages: 170 - 171
For rods please check pages 178 - 188
For keys please check pages: 189 - 191

tel | +90 212 721 44 44 fax | +90 212 721 44 45

Due to the modular structure, the swing-handle can be easily modified to the desired locking system

Modules can be ordered separately.

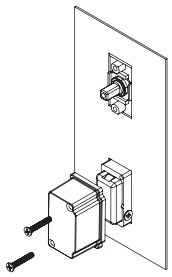

With cover

A : 1

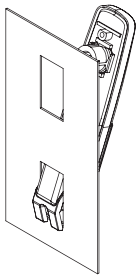

With clip

A : 2

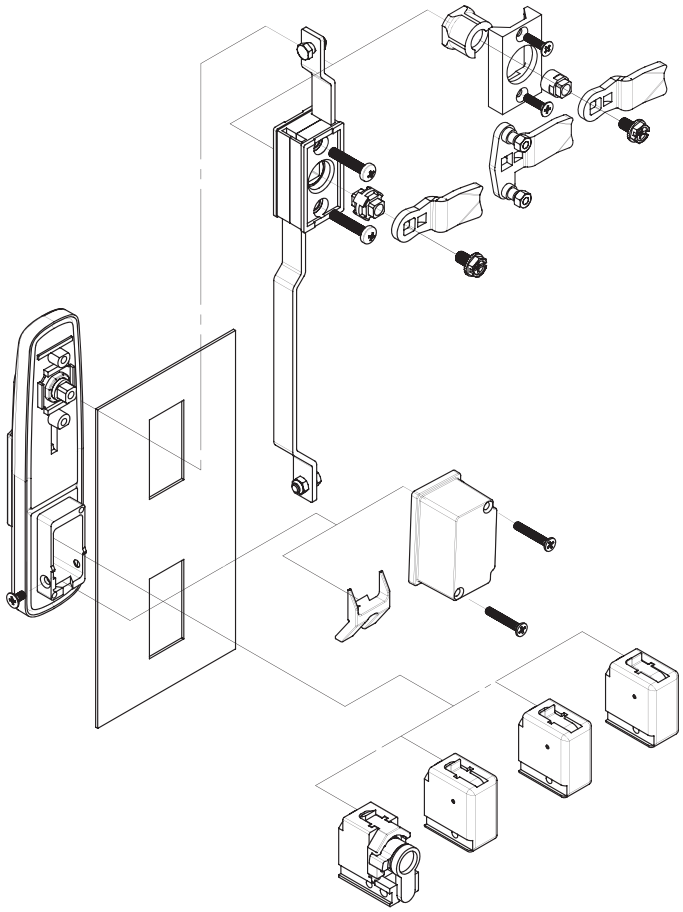

The set items can be ordered seperately with their codes in below

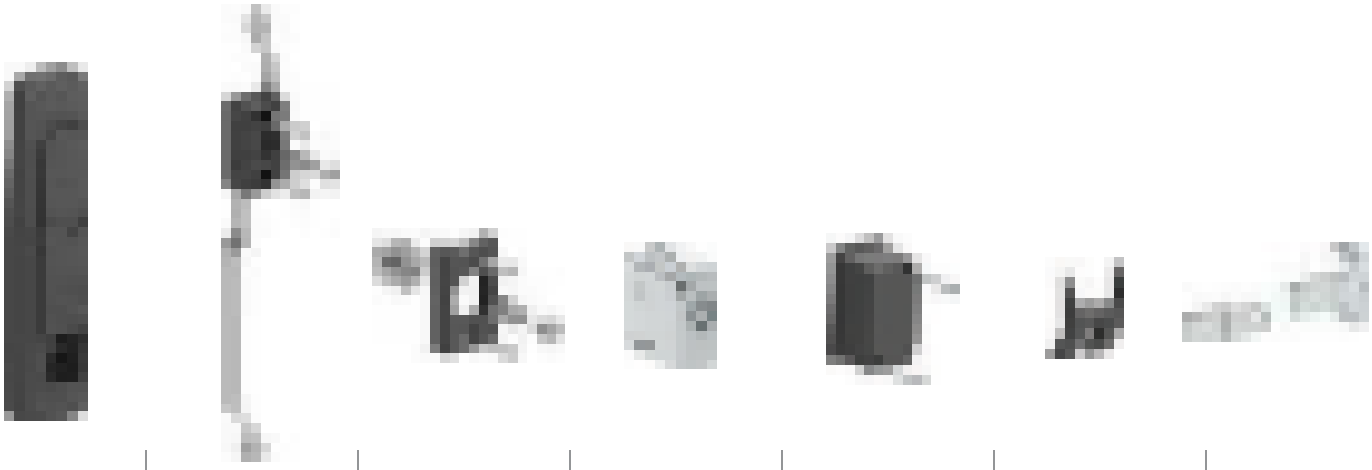

MLS01	MLS02	MLS03	MDLXX	MLS05	320.02.246	CAMS
1-SET: • Body • Handle • Dust cap • Shaft	1-SET: • Plastic Mechanism • Screws • Cam Adapter **For multi point locking**	**For single point locking**	MODULES • MDLXX	1-SET: • Plastic Fixed Part • Screws **With this set the handle meet IP 65 specs.**	1-PCS • Clip-in part **With this clip-in part mounting time reduces by %50**	**Please check the cams page 172-173**

SWINGHANDLES

SWINGHANDLE 106

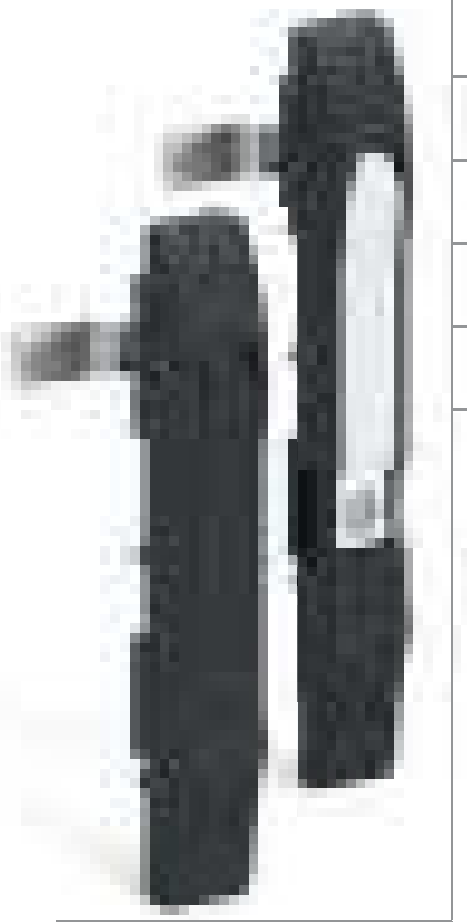

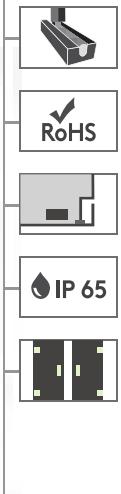

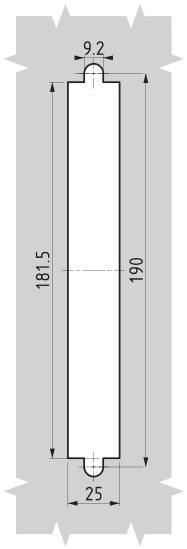

Cut Out

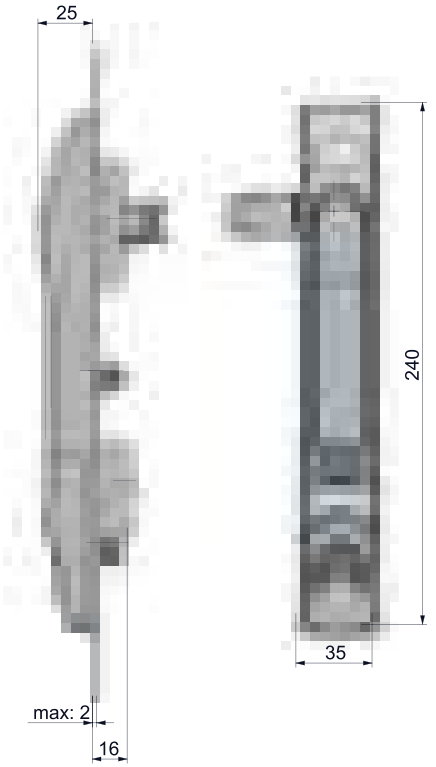

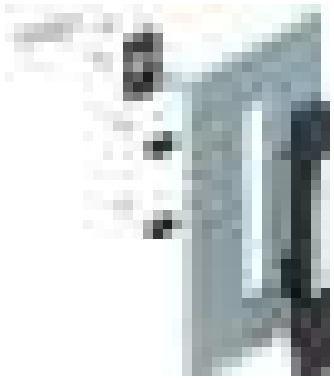

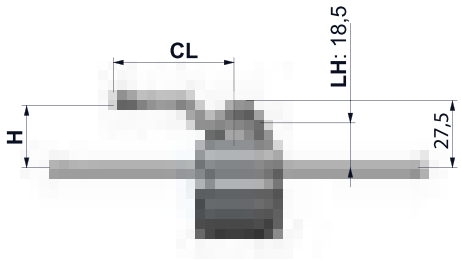

- More suitable for indoor applications
- Spring-loaded, slam-action swinghandle
- Sliding dust cover
- Suited for outside gasketing application

MATERIAL

BODY:	Polyamide DIN-EN ISO 1043-1 PA6 GFR 30
HANDLE:	Zamak DIN-EN 1774-ZnAl4Cu1
CAM:	Steel
SEAL:	Polyurethane

CYLINDER TYPE		DD
	Keyed alike (Stainless steel dust cap)	03
	Keyed differ (Stainless steel dust cap)	32
	Euro key (5333)	05
	CH751 (Stainless steel dust cap)	07
DRIVER TYPE		**DD**
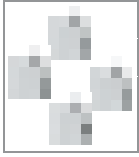	5 mm Double bit	15
	8 mm Square	28
	9 mm Triangular	39
	Button	55

MATERIAL	M	FINISH	F
Zamak	1	Chrome plated	1
		Black coated	2
Plastic	2	No finish	0

Group Code	Handle		Body		Driver Cylinder	Cam
106	1	F	2	0	DD	CC

For cams please check pages: 170 - 171

For rods please check pages 178 - 188

For keys please check pages: 189 - 191

tel | +90 212 721 44 44 fax | +90 212 721 44 45

808 SWINGHANDLE

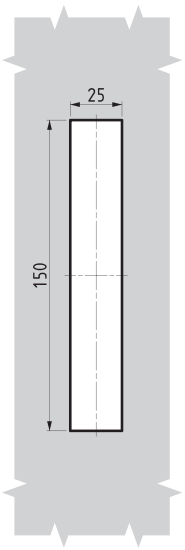

Cut Out

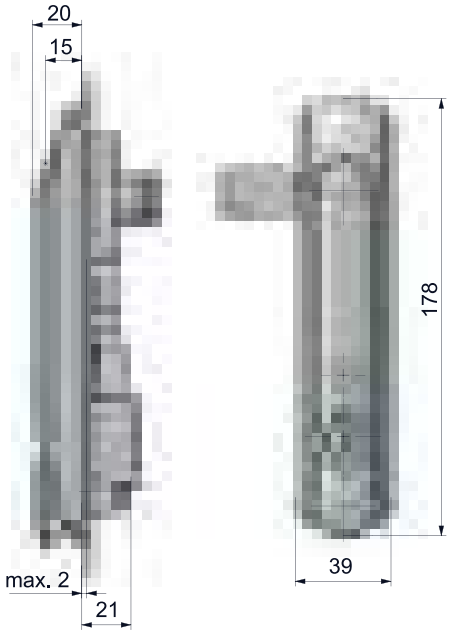

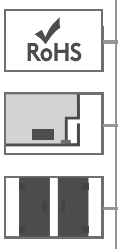



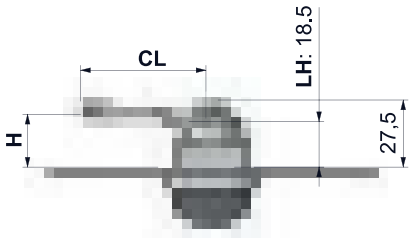

MATERIAL

BODY:	Polyamide DIN-EN ISO 1043-1 PA6 GFR 30
HANDLE:	Polyamide DIN-EN ISO 1043-1 PA6 GFR 30
CAM:	Steel – PA6 GFR 30
SEAL:	Polyurethane

	CYLINDER TYPE	DD
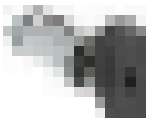	Keyed alike (Stainless steel dust cap)	03
	Keyed differ (Stainless steel dust cap)	32
	Master system	04
	Euro key (5333)	05
	CH751 (Stainless steel dust cap)	07

Group Code	Handle		Body		Cylinder	Cam
808	2	0	2	0	DD	CC

For cams please check pages: 170 - 171
For rods please check pages 178 - 188

SWINGHANDLES

SWINGHANDLE 008



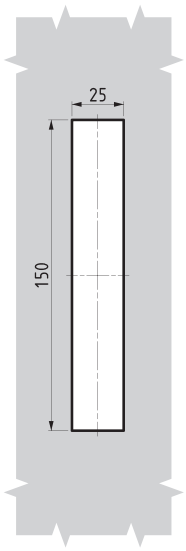

Cut Out

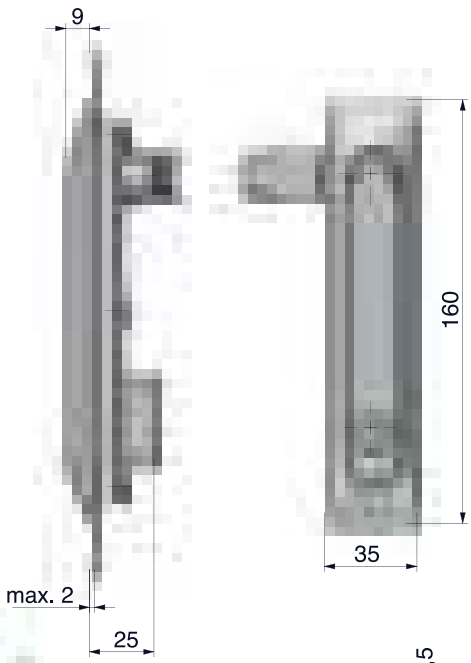

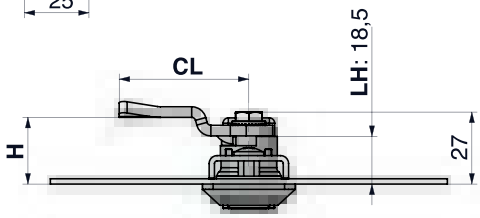



- Cut out 25 mm x 150 mm
- Steel fixing bracket for improved stability and grounding
- Ultra-low external profile, 8 mm, for flush appearance
- Spring-loaded, slam-action swinghandle

MATERIAL

BODY:	Polyamide DIN-EN ISO 1043-1 PA6 GFR 30
HANDLE:	Zamak DIN-EN 1774-ZnAl4Cu1
CAM:	Steel or PA6 GFR 30
SEAL:	Polyurethane

CYLINDER TYPE	DD
Keyed alike (Stainless steel dust cap)	03
Keyed differ (Stainless steel dust cap)	32
Master system	04
Euro key (5333)	05
CH751 (Stainless steel dust cap)	07
DRIVER TYPE	**DD**
5 mm Double bit	15
8 mm Square	28
9 mm Triangular	39
HIGH-SECURITY CYLINDER	**DD**
Keyed alike	20
Keyed differ	21

MATERIAL	M	FINISH	F
Zamak	1	Chrome plated	1
		Black coated	2
Plastic	2	No finish	0

Group Code	Handle	Body	Driver Cylinder	Cam
008	F	2	DD	CC

For cams please check pages: 170 - 171
For rods please check pages 178 - 188
For keys please check pages: 189 - 191

tel | +90 212 721 44 44 fax | +90 212 721 44 45

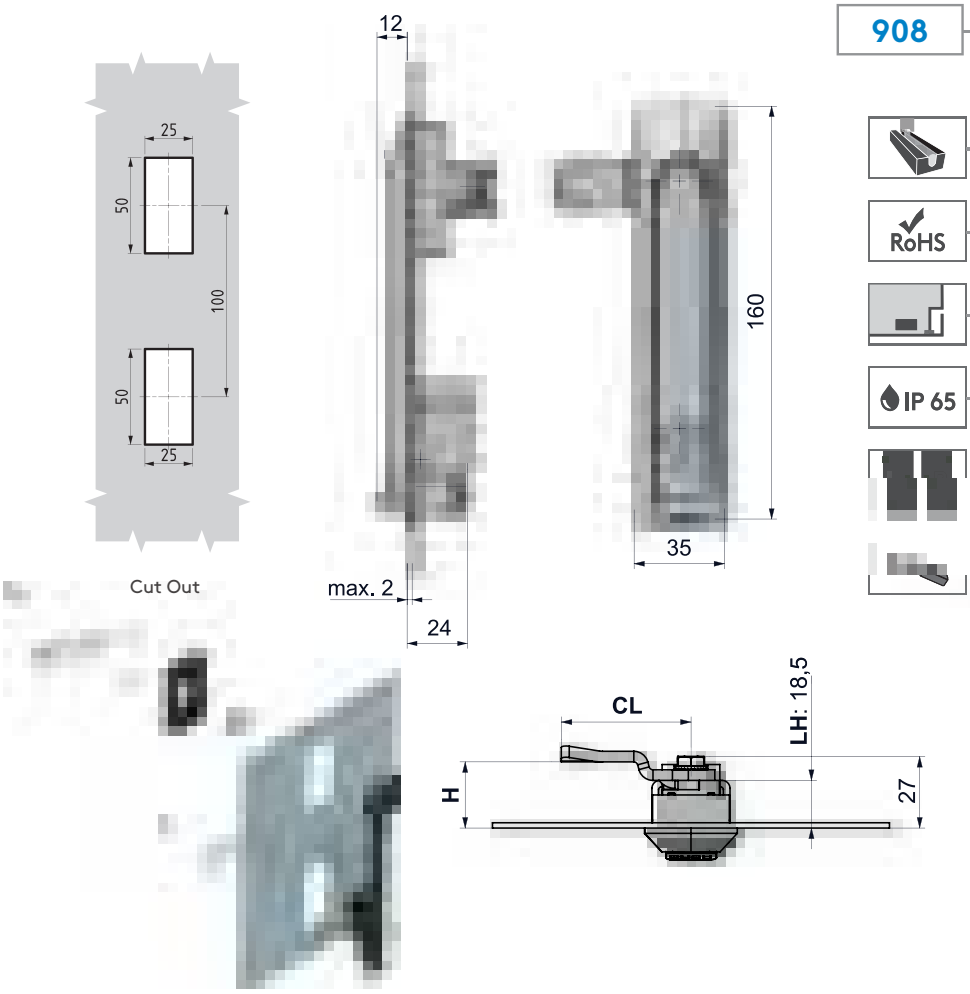

908 SWINGHANDLE

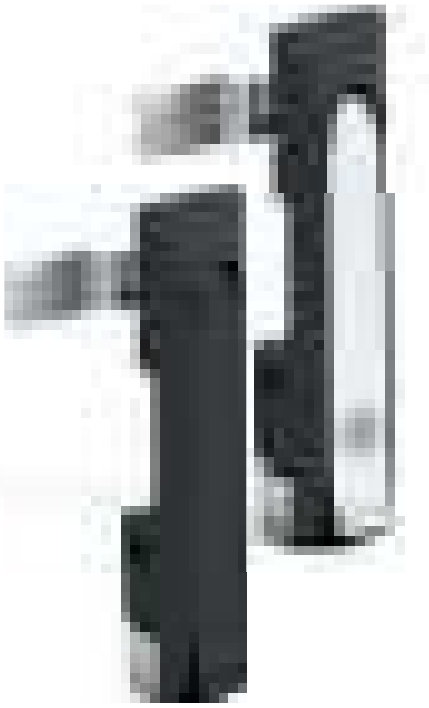

- Swinghandle with push button
- Standard cut out
- Ultra low external profile, just 9 mm, to give flush appearance

MATERIAL

BODY	: Zamak DIN-EN 1774-ZnAl4Cu1 or PA6 GFR 30
HANDLE	: Zamak DIN-EN 1774-ZnAl4Cu1
CAM	: Steel or PA6 GFR30
SEAL	: Polyurethane

CYLINDER TYPE	DD
No Cylinder	00
Keyed alike (Stainless steel dust cap)	03
Keyed differ (Stainless steel dust cap)	32
Master system	04
Euro key (5333)	05
CH751 (Stainless steel dust cap)	07
DRIVER TYPE	**DD**
5 mm Double bit	15
8 mm Square	28
9 mm Triangular	39

MATERIAL	M	FINISH	F
Zamak	1	Chrome plated	1
		Black coated	2
Plastic	2	No finish	0

Group Code	Handle		Body		Driver Cylinder	Cam	Padlock*
908	1	F	M	F	DD	CC	

*: add **"1"** for padlock application



Padlock application

For cams please check pages: 170 - 171
For rods please check pages 178 - 188
For keys please check pages: 189 - 191

SWINGHANDLES

SWINGHANDLE 108



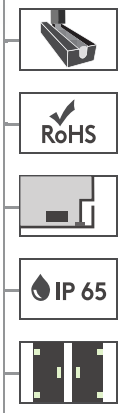

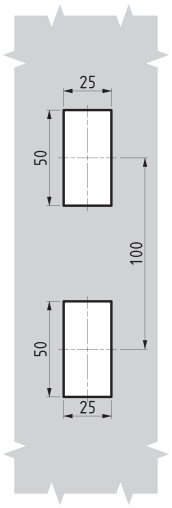

Cut Out

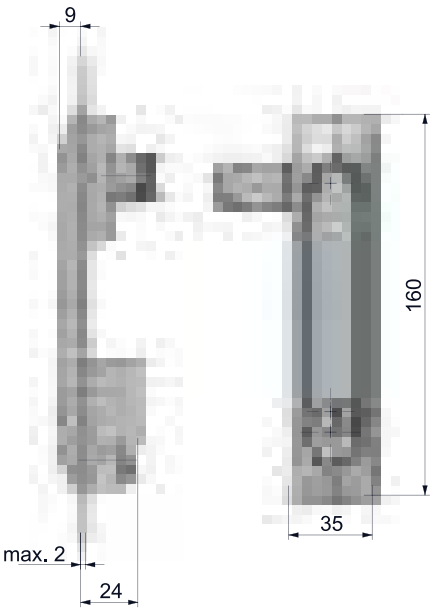



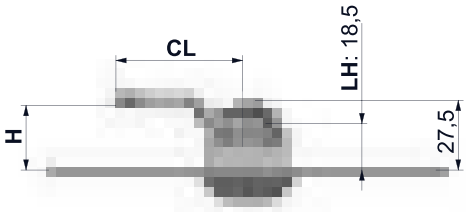

- Stronger and better looking than polyamide
- Spring-loaded, slam-action swim handle
- For customised colours contact Essentra

MATERIAL

BODY:	Zamak DIN-EN 1774-ZnAl4Cu1 or PA6 GFR 30
HANDLE:	Zamak DIN-EN 1774-ZnAl4Cu1
CAM:	Steel or PA6 GFR 30
SEAL:	Polyurethane

For cams please check pages: 170 - 171

For rods please check pages 178 - 188

For keys please check pages: 189 - 191

CYLINDER TYPE		DD
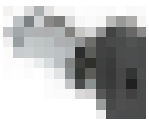	Keyed alike (Stainless steel dust cap)	03
	Keyed differ (Stainless steel dust cap)	32
	Master system	04
	Euro key (5333)	05
	CH751 (Stainless steel dust cap)	07
DRIVER TYPE		**DD**
	5 mm Double bit	15
	8 mm Square	28
	9 mm Triangular	39
HIGH-SECURITY CYLINDER		**DD**
	Keyed alike	20
	Keyed differ	21

MATERIAL	M	FINISH	F
Zamak	1	Chrome plated	1
		Black coated	2
Plastic	2	No finish	0

Group Code	Handle		Body		Driver Cylinder	Cam
108	1	F	M	F	DD	CC

tel | +90 212 721 44 44 fax | +90 212 721 44 45

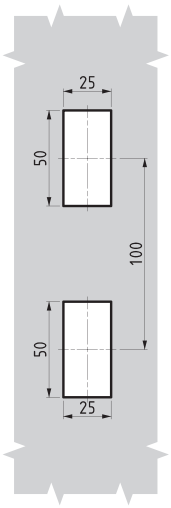

Cut Out

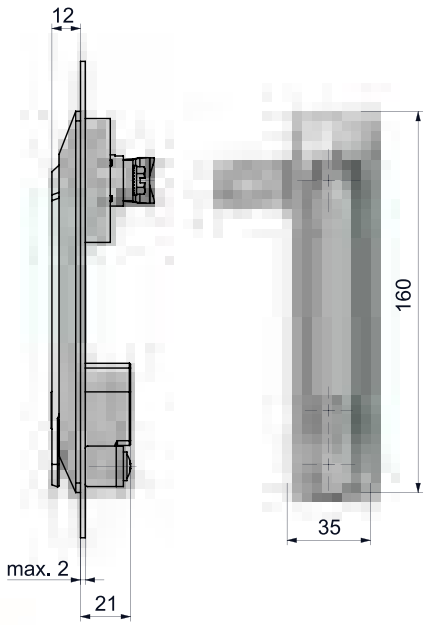



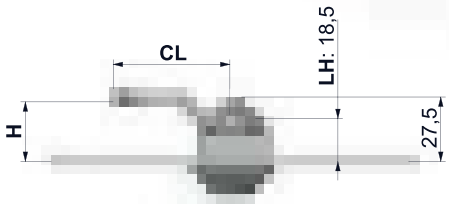

208 SWINGHANDLE

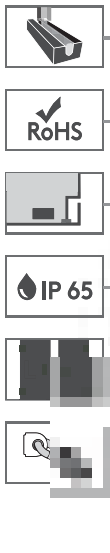

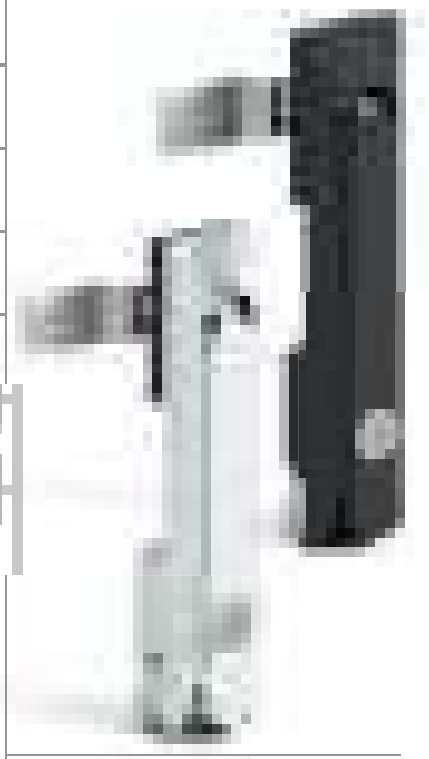

- Handle is not spring loaded and slam action
- Key can be removed at unlocked position.

MATERIAL

BODY:	Zamak DIN-EN 1774-ZnAl4Cu1 or PA6 GFR 30
HANDLE:	Zamak DIN-EN 1774-ZnAl4Cu1 or PA6 GFR 30
CAM:	Steel or PA6 GFR 30
SEAL:	Polyurethane

CYLINDER TYPE		DD
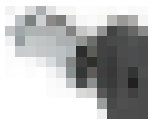	No Cylinder	00
	Keyed alike (Stainless steel dust cap)	03
	Keyed differ (Stainless steel dust cap)	32
	Master system	04
	Euro key (5333)	05
	CH751 (Stainless steel dust cap)	07
DRIVER TYPE		**DD**
	5 mm Double bit	15
	8 mm Square	28
	9 mm Triangular	39

MATERIAL	M	FINISH	F
Zamak	1	Chrome plated	1
		Black coated	2
Plastic	2	No finish	0

Group Code	Handle		Body		Driver Cylinder	Cam	Padlock*
208	M	F	M	F	DD	CC	

*: add **"1"** for padlock application

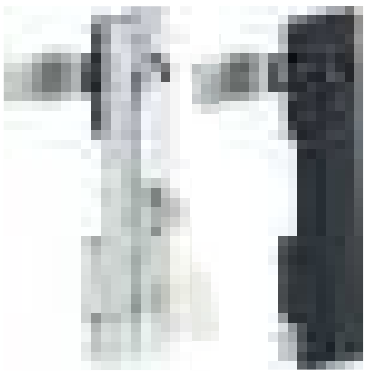

Padlock application (All in metal only is applied)

No Cylinder

For cams please check pages: 170 - 171
For rods please check pages 178 - 188

SWINGHANDLES

SWINGHANDLE 108

ALL IN METAL



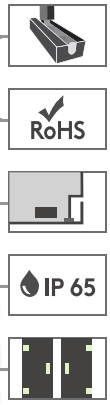

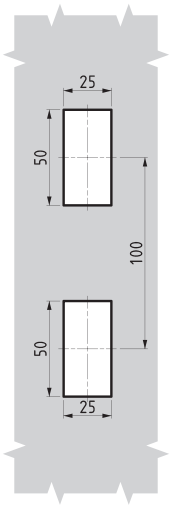

Cut Out

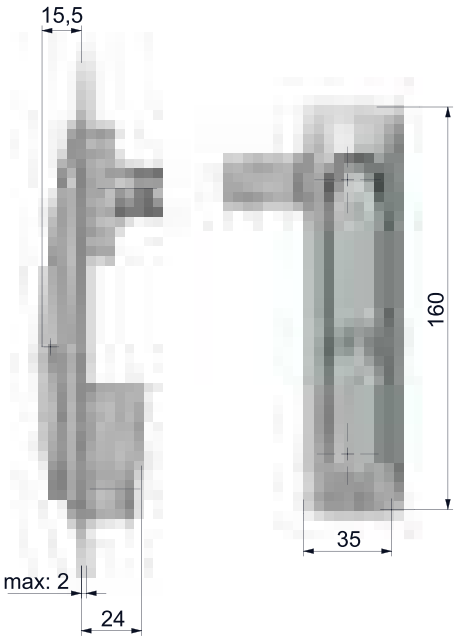

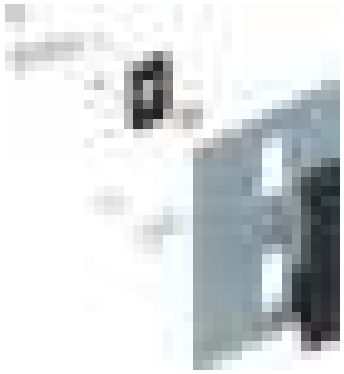

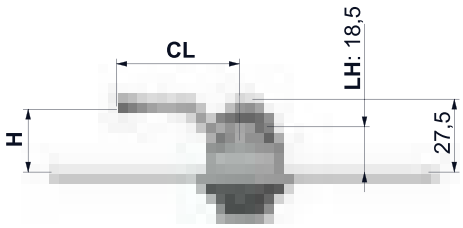

- All metal construction
- Improved corrosion resistance.
- High-security cylinder alternative
- Improved IP resistance with moving dust cap

MATERIAL

BODY:	Zamak DIN-EN 1774-ZnAl4Cu1
HANDLE:	Zamak DIN-EN 1774-ZnAl4Cu1
CAM:	Steel or PA6 GFR 30
SEAL:	Polyurethane

CYLINDER TYPE		DD
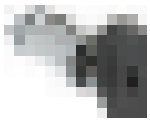	Keyed alike (Stainless steel dust cap)	03
	Keyed differ (Stainless steel dust cap)	32
	Master system	04
	Euro key (5333)	05
	CH751 (Stainless steel dust cap)	07
DRIVER TYPE		**DD**
	5 mm Double bit	15
	8 mm Square	28
	9 mm Triangular	39
HIGH-SECURITY CYLINDER		**DD**
	Keyed alike	20
	Keyed differ	21

MATERIAL	M	FINISH	F
Zamak	1	Chrome plated	1
		Black coated	2

Group Code	Version	Handle		Body		Cylinder	Cam
108	2	1	F	1	F	DD	CC

For cams please check pages: 170 - 171
For rods please check pages 178 - 188
For keys please check pages: 189 - 191

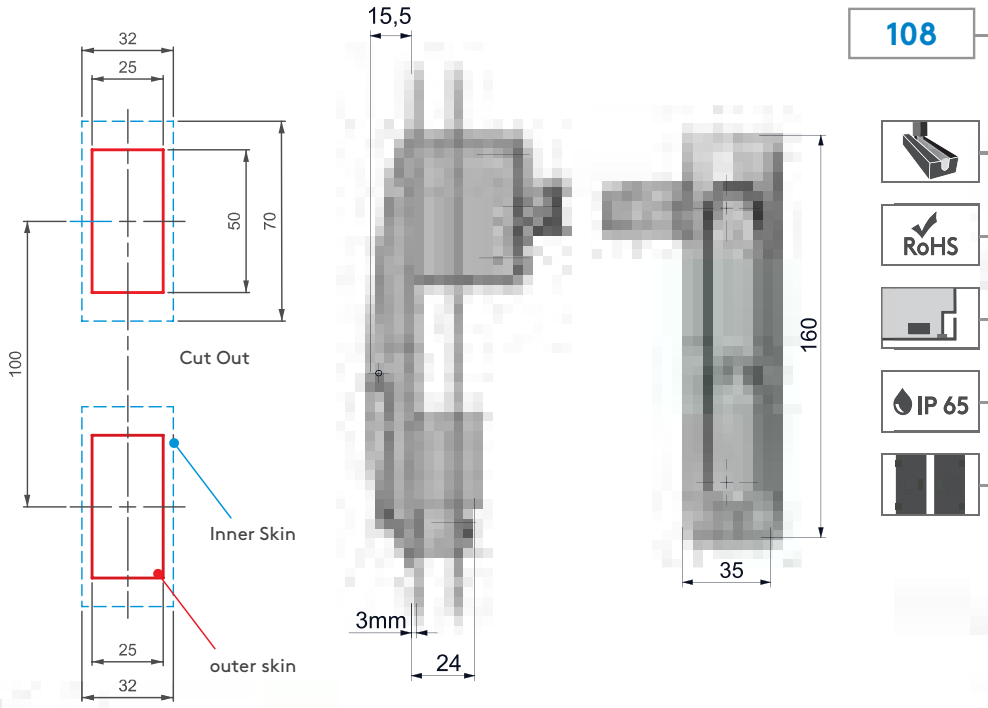

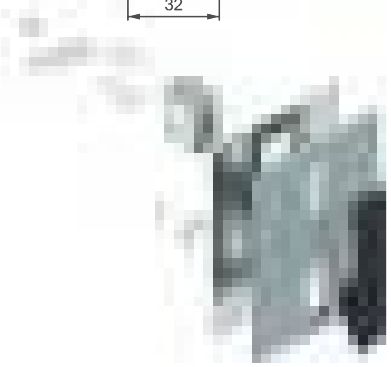

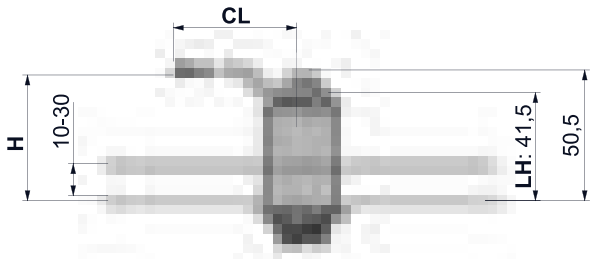

The swinghandle can be modified per double-skin panel thickness.

108 SWINGHANDLE

ALL IN METAL



- Ideal for double-skin doors and outdoor cabinets
- Improved strength to protect against vandalism
- High-security cylinder with special shaped key prevents unauthorized duplication
- Improved IP resistance with moving dust cap
- Spring-loaded, slam-action swinghandle

MATERIAL

BODY:	Zamak DIN-EN 1774-ZnAl4Cu1
HANDLE:	Zamak DIN-EN 1774-ZnAl4Cu1
CAM:	Steel or PA6 GFR 30
SEAL:	Polyurethane

CYLINDER TYPE		DD
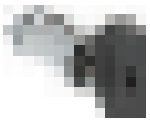	Keyed alike (Stainless steel dust cap)	03
	Keyed differ (Stainless steel dust cap)	32
	Master system	04
	Euro key (5333)	05
	CH751 (Stainless steel dust cap)	07
DRIVER TYPE		**DD**
	5 mm Double bit	15
	8 mm Square	28
	9 mm Triangular	39
HIGH-SECURITY CYLINDER		**DD**
	Keyed alike	20
	Keyed differ	21

MATERIAL	M	FINISH	F
Zamak	1	Chrome plated	1
		Black coated	2

Group Code	Version	Handle		Body		Cylinder	Cam
108	3	1	F	1	F	DD	CC

For cams please check pages: 170 - 171
For rods please check pages 178 - 188
For keys please check pages: 189 - 191

SWINGHANDLES

SWINGHANDLE 308

SMALL VERSION



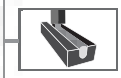





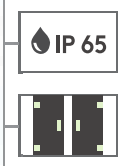

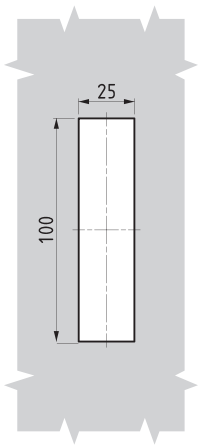

Cut Out

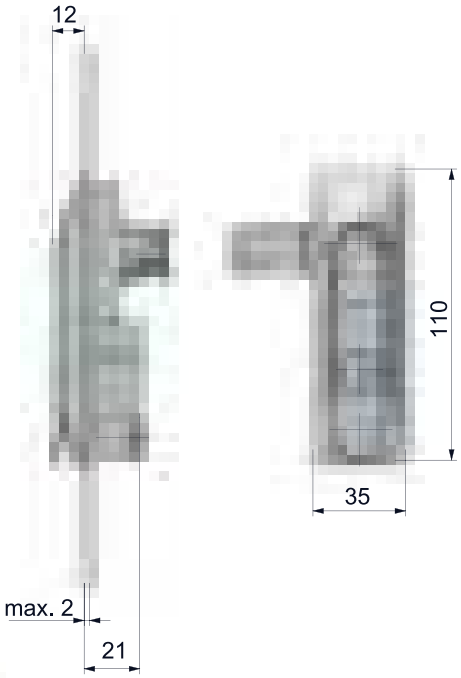

- For indoor applications
- 25 mm x 100 mm cut out

MATERIAL

BODY:	Polyamide DIN-EN ISO 1043-1 PA6 GFR 30
HANDLE:	Zamak DIN-EN 1774-ZnAl4Cu1 or PA6 GFR 30
CAM:	Steel
SEAL:	Polyurethane



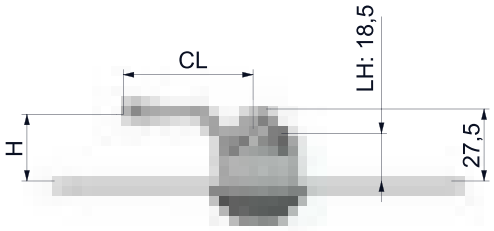

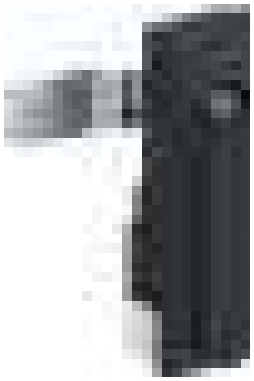

No Cylinder

CYLINDER TYPE	DD
No Cylinder	00
Keyed alike (Stainless steel dust cap)	03
Keyed differ (Stainless steel dust cap)	32
Master system	04
Euro key (5333)	05
CH751 (Stainless steel dust cap)	07

MATERIAL	M	FINISH	F
Zamak	1	Chrome plated	1
		Black coated	2
Plastic	2	No finish	0

Group Code	Handle		Body		Driver Cylinder	Cam
308	M	F	2	0	DD	CC

For cams please check pages: 170 - 171

tel | +90 212 721 44 44 fax | +90 212 721 44 45

708 SWINGHANDLE

SMALL VERSION

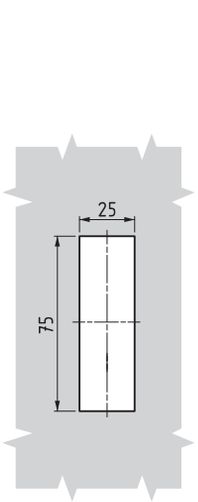

Cut Out

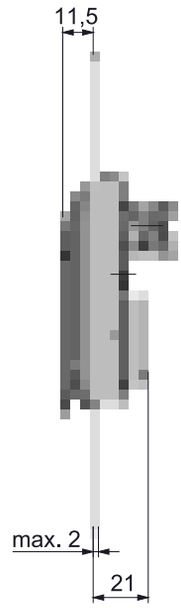

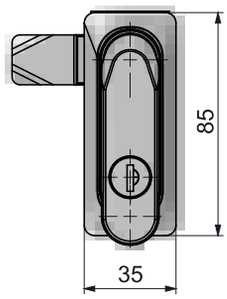

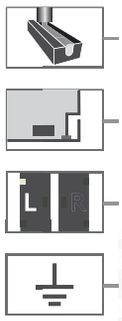

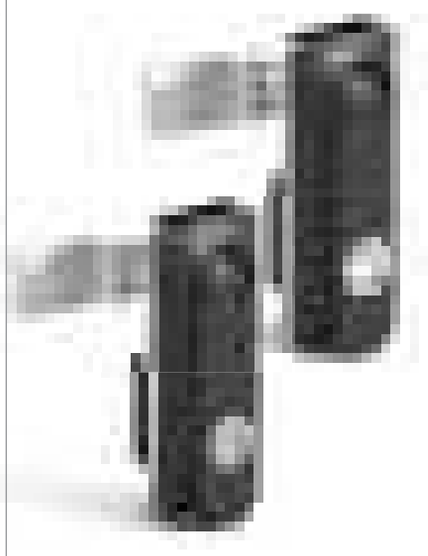



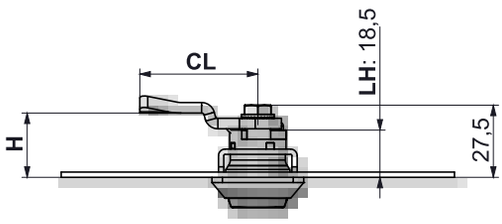

- Can be used for internal applications
- 25 X 75 mm cut out
- Lock can be opened by pressing the button

MATERIAL

BODY:	Polyamide DIN-EN ISO 1043-1 PA6 GFR 30
HANDLE:	Polyamide DIN-EN ISO 1043-1 PA6 GFR 30
CYLINDER:	Zamak DIN-EN 1774-ZnAl4Cu1
BUTTON:	Zamak DIN-EN 1774-ZnAl4Cu1
CAM:	Steel
SEAL:	Polyurethane

CYLINDER TYPE	DD
Keyed alike (Stainless steel dust cap)	03
Keyed differ (Stainless steel dust cap)	32
Master system	04
Euro key (5333)	05
CH751 (Stainless steel dust cap)	07

MATERIAL	M	FINISH	F
Zamak	1	Chrome plated	1
		Black coated	2
Plastic	2	No finish	0

Group Code	Handle		Body	Cylinder	Cam
708	2	0	2	DD	CC

Group Code	Handle		Button		Cam
708	2	0	1	F	CC

Button type code system

For cams please check pages: 170 - 171

SWINGHANDLE 508

ALL IN METAL



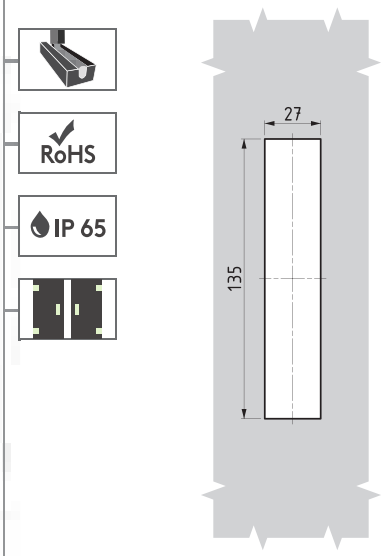

Cut Out

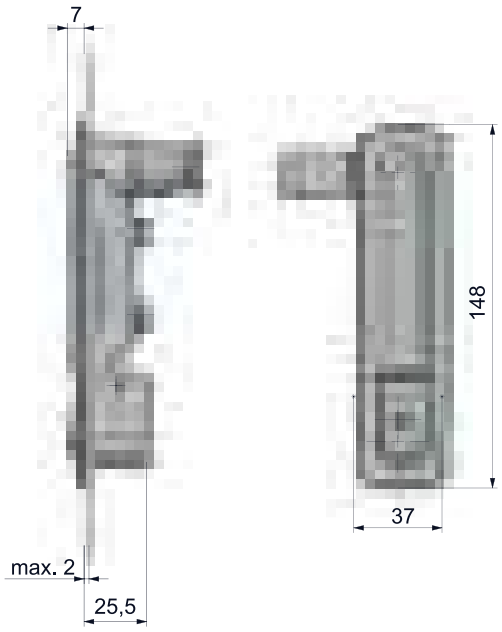



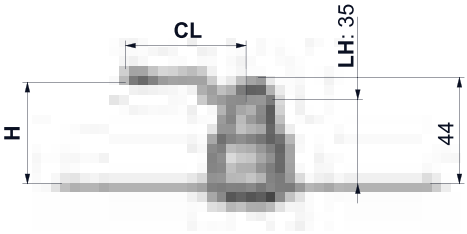

- Swinghande with push button
- Can assemble with one fixing bracket
- Offers an economical solution

MATERIAL

BODY:	Zamak DIN-EN 1774-ZnAl4Cu1
HANDLE:	Zamak DIN-EN 1774-ZnAl4Cu1
CAM:	Steel or PA6 GFR30
SEAL:	Polyurethane

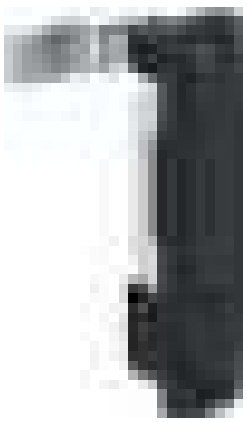

No Cylinder

	CYLINDER TYPE	DD
	No Cylinder	00
	Keyed alike	01
	Keyed differ	02

MATERIAL	M	FINISH	F
Zamak	1	Chrome plated	1
		Black coated	2

Group Code	Handle		Body		Driver Cylinder	Cam
508	1	F	1	F	DD	CC

For cams please check pages: 170 - 171

tel | +90 212 721 44 44 fax | +90 212 721 44 45

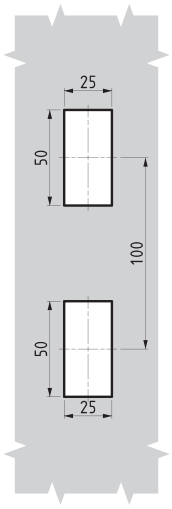

Cut Out



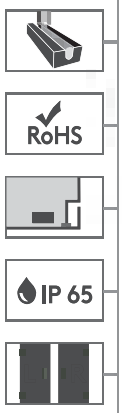

006 SWINGHANDLE

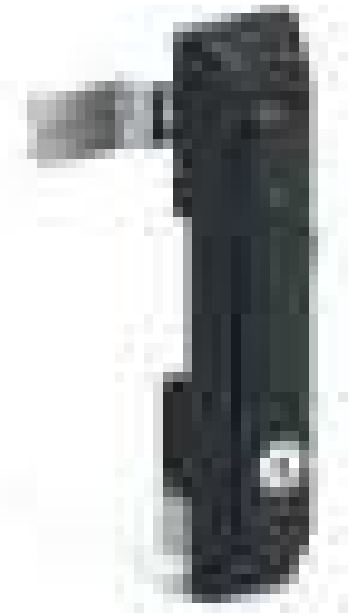



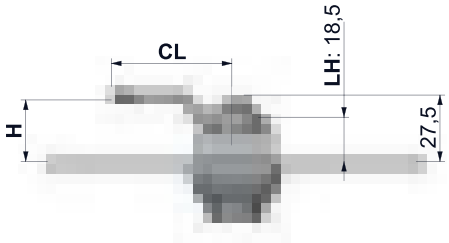

- Lower strength swinghandle that accepts: cylindrical drivers only
- Spring-loaded, slam-action swinghandle
- For indoor and outdoor application

MATERIAL

BODY:	Polyamide DIN-EN ISO 1043-1 PA6 GFR 30
HANDLE:	Polyamide DIN-EN ISO 1043-1 PA6 GFR 30
CAM:	Steel or PA6 GFR 30
SEAL:	Polyurethane

CYLINDER TYPE		DD
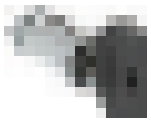	Keyed alike (Stainless steel dust cap)	03
	Keyed differ (Stainless steel dust cap)	32
	Master system	04
	Euro key (5333)	05
	CH751 (Stainless steel dust cap)	07
DRIVER TYPE		**DD**
	5 mm Double bit	15
	8 mm Square	28
	9 mm Triangular	39

Group Code	Driver Cylinder	Cam
006	DD	CC

For cams please check pages: 170 - 171
For rods please check pages 178 - 188
For keys please check pages: 189 - 191

SWINGHANDLE 205

NEW

RoHS

L R

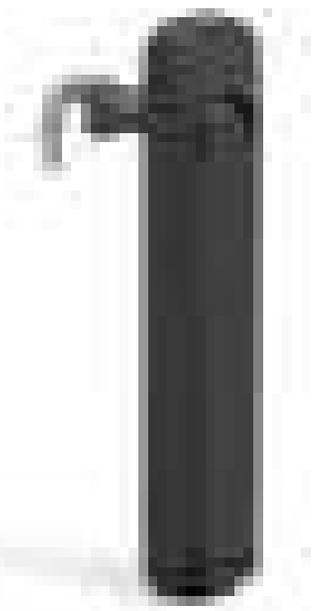

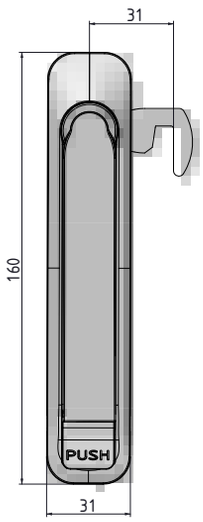

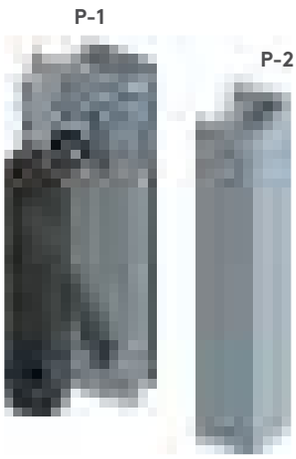

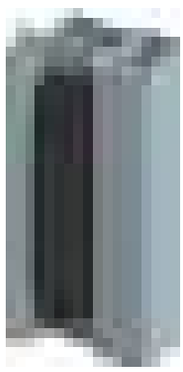

MATERIAL

BODY:	Polyamide DIN-EN ISO 1043-1 PA6 GFR 30
HANDLE:	Zamak DIN-EN 1774-ZnAl4Cu1
CAM:	Steel

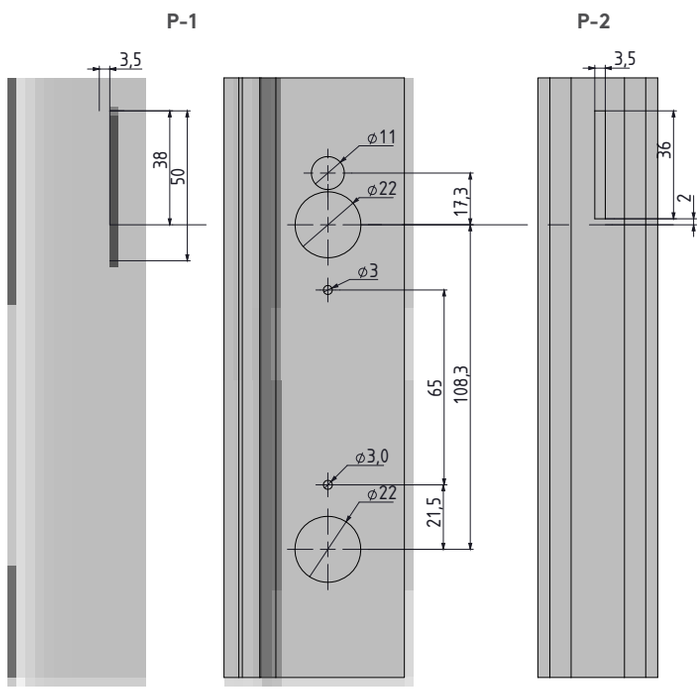

MATERIAL	M	FINISH	F
Zamak	1	Chrome plated	1
		Black coated	2

Group Code	Version	Body		Handle	
205	1	2	0	1	F

tel | + 90 212 721 44 44 fax | + 90 212 721 44 45

205 SWINGHANDLE

NEW

RoHS

L R

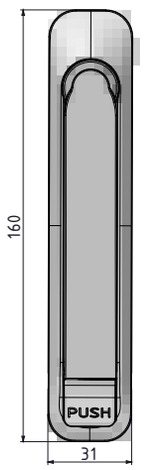

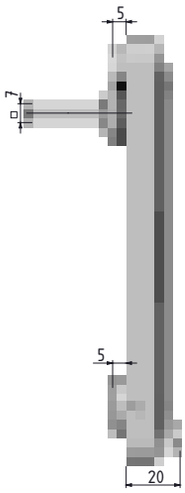

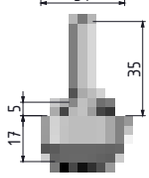



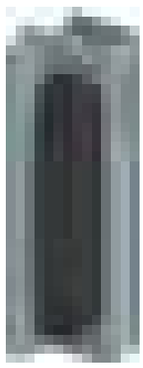

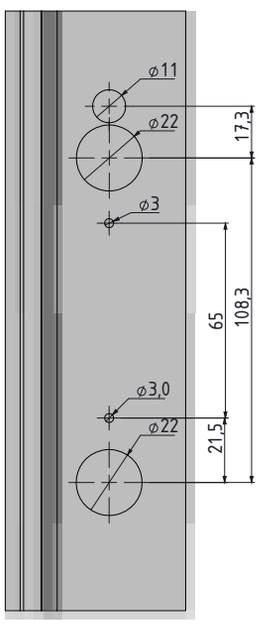

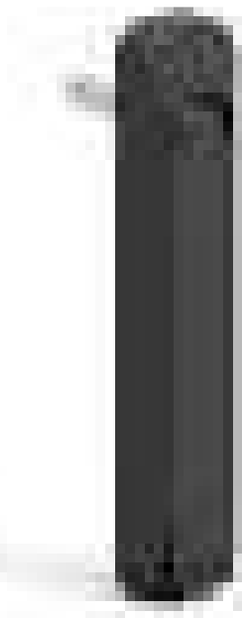

MATERIAL

BODY:	Polyamide DIN-EN ISO 1043-1 PA6 GFR 30
HANDLE:	Zamak DIN-EN 1774-ZnAl4Cu1
CAM:	Steel

MATERIAL	M	FINISH	F
Zamak	1	Chrome plated	1
		Black coated	2

Group Code	Version	Body		Handle	
205	2	2	0	1	F

FAST FIND INDEX

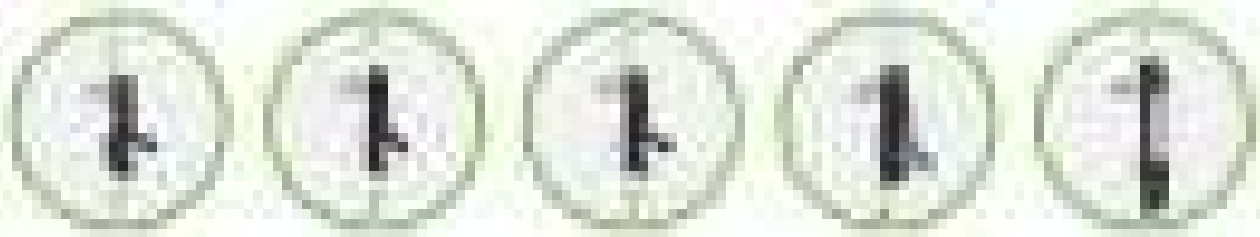
54 56-57 58 59-60 61

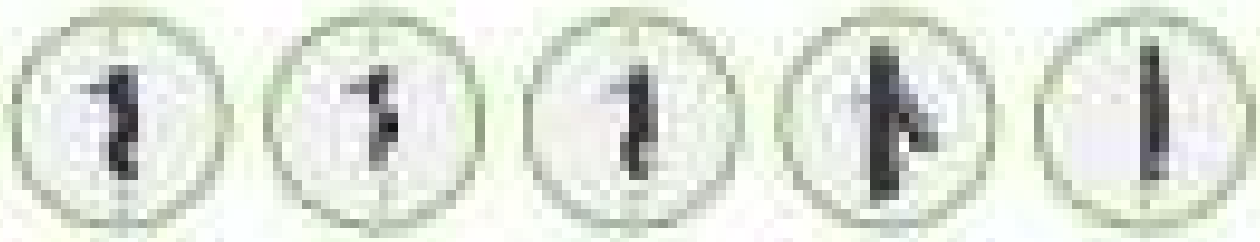
62 63 64-65 66-67 68-69

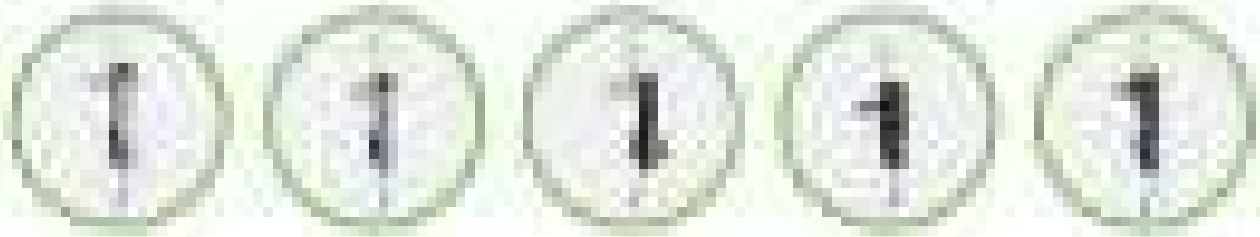
70 71 72-73 74 75

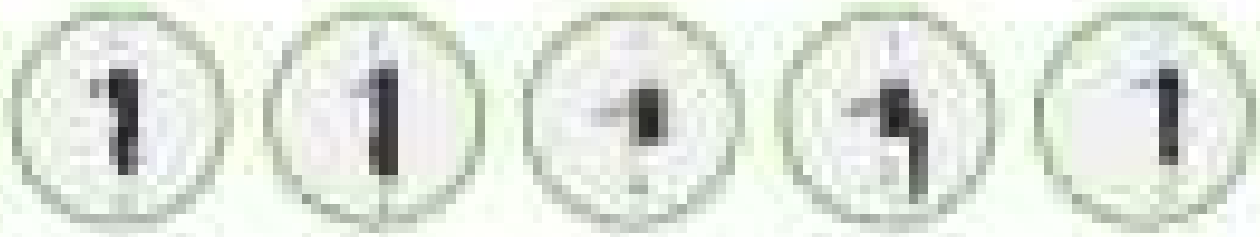
76 77 78 79 80

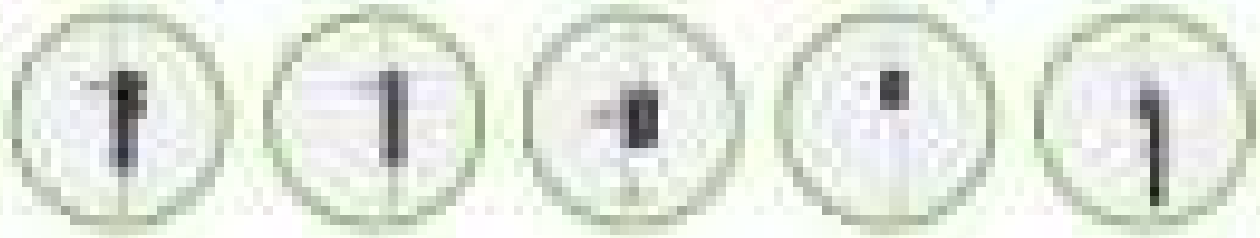
81 82 83 84-85 86



ROD-LATCH SYSTEM

52-87

mesan
ESSENTRA COMPONENTS

email | info@mesanlocks.com web | www.mesanlocks.com

ROD-LATCH SYSTEM

SWINGHANDLE GEAR BOX — 002

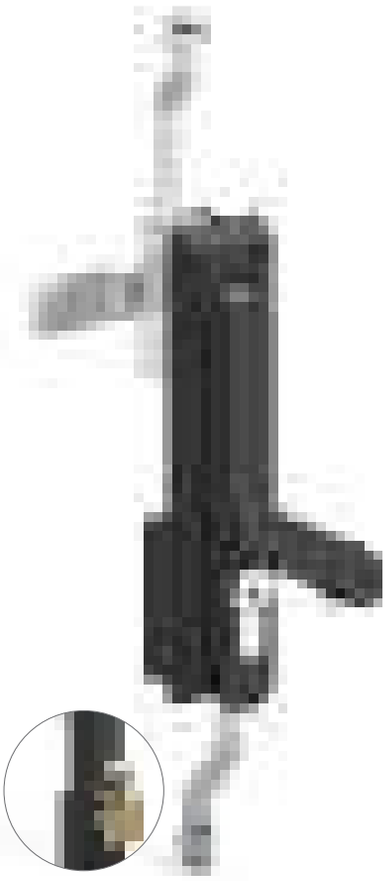

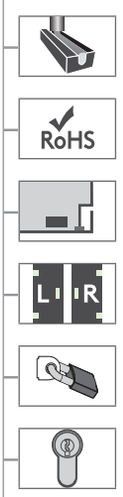

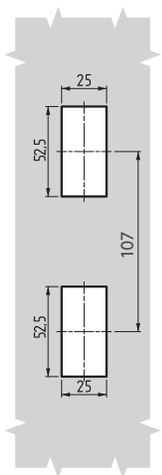

Cut Out



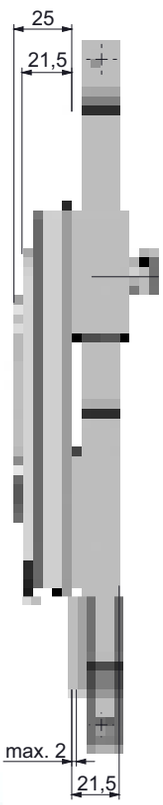

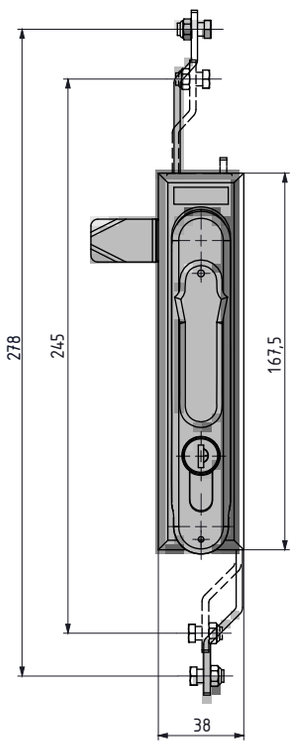

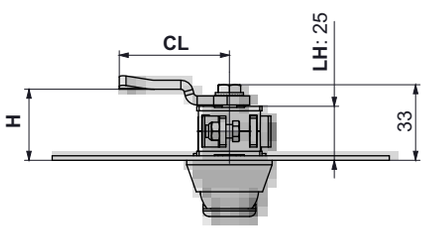

- Swinghandle for steel and polyester cabinets
- 40 mm Euro Profile single cylinder fitted
- Padlockable version available
- For 42 mm Euro Profile single cylinder contact Essentra

MATERIAL

BODY	Polyamide DIN-EN ISO 1043-1 PA6 GFR 30
HANDLE	Polyamide DIN-EN ISO 1043-1 PA6 GFR 30
MECHANISM:	Zamak DIN-EN 1774-ZnAl4Cu1
CAM:	Steel
GASKET:	Polyurethane

CYLINDER TYPE		DD
	Keyed alike (Stainless steel dust cap)	03
	Keyed differ (Stainless steel dust cap)	32
	Master system	04
	Euro key (5333)	05
	CH751 (Stainless steel dust cap)	07
DRIVER TYPE		**DD**
	5 mm Double bit	15
	8 mm Square	28
	9 mm Triangular	39
	Eastern	91
HIGH-SECURITY CYLINDER (Zamak)		**DD**
	Keyed alike	22
	Keyed differ	23
NO CYLINDER		**DD**
	Plastic blind cylinder	24

Group Code	Driver Cylinder	Cam	Padlock*
002	DD	CC	

*: add "1" for padlock application

For cams please check pages: 170 - 171

For rods please check pages: 178 - 188

For keys please check pages: 189 - 191

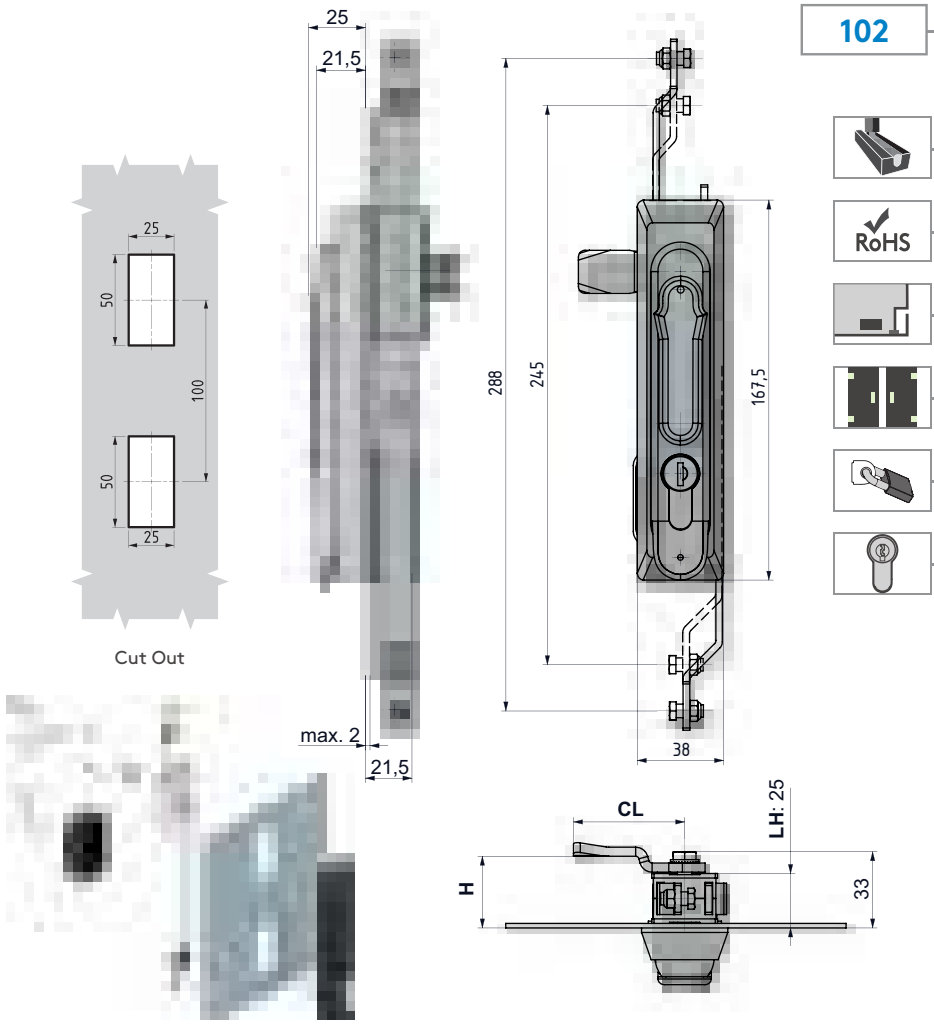

102 SWINGHANDLE GEAR BOX



- Swinghandle for steel and polyester cabinets
- 40 mm Euro Profile single cylinder fitted
- For 42 mm Euro Profile single cylinder contact Essentra
- Padlockable version available

MATERIAL

BODY	Polyamide DIN-EN ISO 1043-1 PA6 GFR 30
HANDLE:	Polyamide DIN-EN ISO 1043-1 PA6 GFR 30
MECHANISM:	Zamak DIN-EN 1774-ZnAl4Cu1
CAM:	Steel
GASKET:	Polyurethane

CYLINDER TYPE		DD
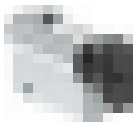	Keyed alike (Stainless steel dust cap)	03
	Keyed differ (Stainless steel dust cap)	32
	Master system	04
	Euro key (5333)	05
	CH751 (Stainless steel dust cap)	07
DRIVER TYPE		**DD**
	5 mm Double bit	15
	8 mm Square	28
	9 mm Triangular	39
	Eastern	91
HIGH-SECURITY CYLINDER (Zamak)		**DD**
	Keyed alike	22
	Keyed differ	23
NO CYLINDER		**DD**
	Plastic blind cylinder	24

Group Code	Driver Cylinder	Cam	Padlock*
102	DD	CC	

*: add "1" for padlock application

For cams please check pages: 170 - 171
For rods please check pages: 178 - 188
For keys please check pages: 189 - 191

SWINGHANDLE GEAR BOX 502

ALL IN METAL

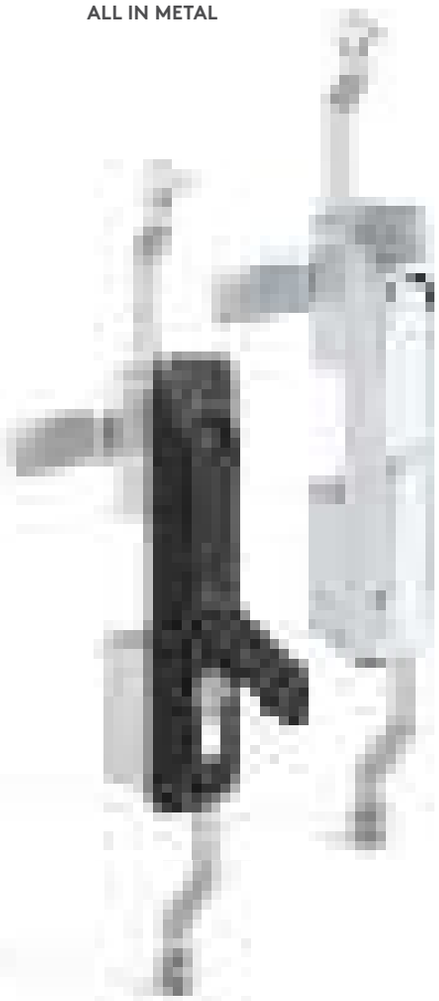

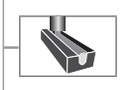

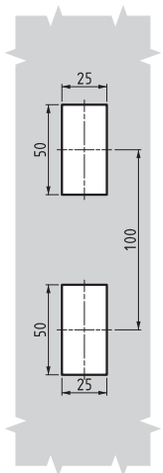

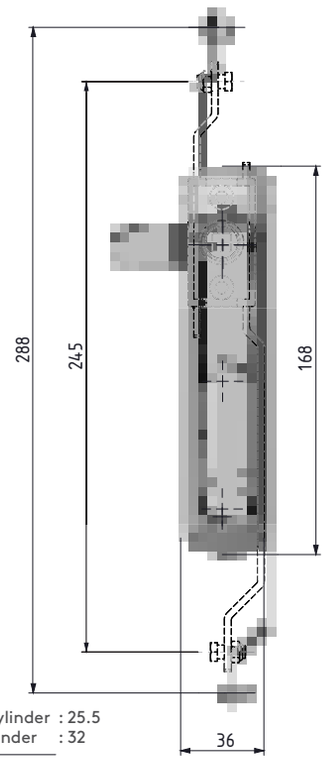

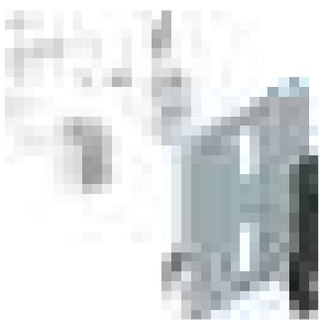

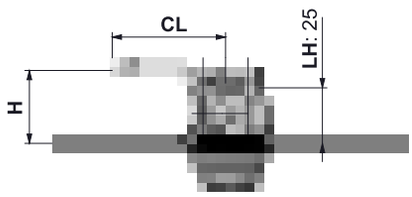



O:1 Dust cap application



O:2 Padlock application



O:12 Dust cap + Padlock application

- **Stainless steel version: page 446**
- Die-cast construction stronger than polyamide
- Thin external profile, 14.4 mm, for flush appearance
- High-security, brass, Euro Profile single-cylinder available
- Dust cap available
- Padlockable version available
- For different colours contact Essentra

MATERIAL

BODY	Zamak DIN-EN 1774-ZnAl4Cu1
HANDLE	Zamak DIN-EN 1774-ZnAl4Cu1
MECHANISM:	Zamak DIN-EN 1774-ZnAl4Cu1
GASKET:	Polyurethane

CYLINDER TYPE		DD
	Keyed alike (Stainless steel dust cap)	03
	Keyed differ (Stainless steel dust cap)	32
	CH751 (Stainless steel dust cap)	07
DRIVER TYPE		**DD**
	5 mm Double bit	15
	8 mm Square	28
	9 mm Triangular	39
	Eastern	91
BRASS CYLINDER		**DD**
	Keyed alike	11
HIGH-SECURITY CYLINDER (Zamak)		**DD**
	Keyed alike	22
	Keyed differ	23

MATERIAL	M	FINISH	F
Zamak	1	Chrome plated	1
		Black coated	2

Group Code	Handle		Body		Cylinder	Cam	Option
502	1	F	1	F	DD	CC	O

For cams please check pages: 170 - 171
For rods please check pages: 178 - 188
For keys please check pages: 189 - 191

tel | + 90 212 721 44 44 fax | + 90 212 721 44 45

502 SWINGHANDLE GEAR BOX

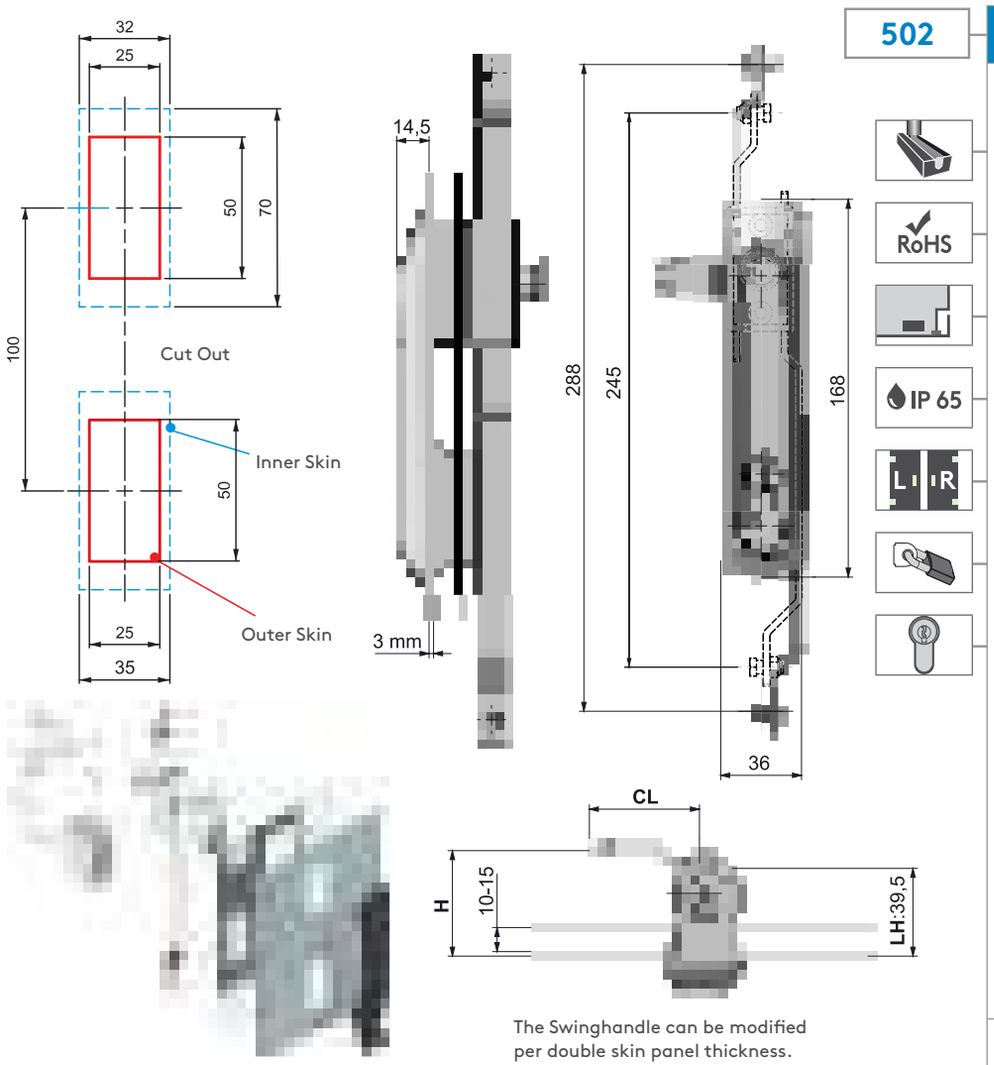

The Swinghandle can be modified per double skin panel thickness.

ALL IN METAL

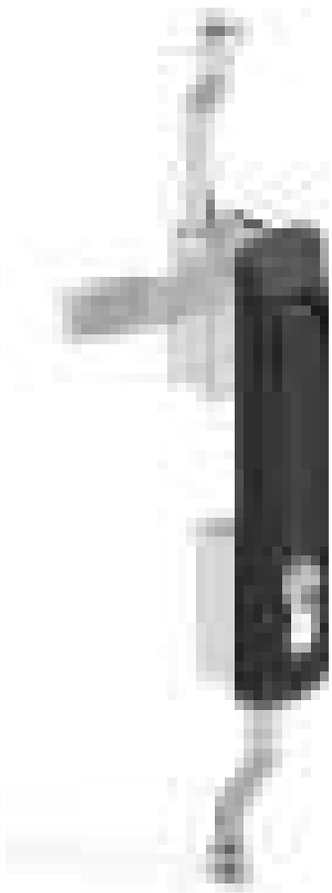

- **Stainless steel version: page 457**
- High-security swing handle for indoor and outdoor cabinets
- Ideal for double-skin door panels and outdoor cabinets
- Spring loaded ,slam-action swing handle
- Dust cap and padlockable versions optional

MATERIAL

BODY	Zamak DIN-EN 1774-ZnAl4Cu1
HANDLE	Zamak DIN-EN 1774-ZnAl4Cu1
MECHANISM:	Zamak DIN-EN 1774-ZnAl4Cu1
GASKET:	Polyurethane



O:1 Dust cap application



O:2 Padlock application



O:12 Dust cap + Padlock application

ZAMAK BAREL		DD
	Keyed alike (Stainless steel dust cap)	03
	Keyed differ (Stainless steel dust cap)	32
	CH751 (Stainless steel dust cap)	07
BRASS CYLINDER		**DD**
	Keyed alike	11
HIGH-SECURITY CYLINDER (Zamak)		**DD**
	Keyed alike	22
	Keyed differ	23

MATERIAL	M	FINISH	F
Zamak	1	Chrome plated	1
		Black coated	2

Group Code	Version	Handle		Body		Cylinder	Cam	Option
502	3	1	F	1	F	DD	CC	O

For cams please check pages: 170 - 171
For rods please check pages: 178 - 188
For keys please check pages: 189 - 191

SWINGHANDLE GEAR BOX 602

ALL IN METAL

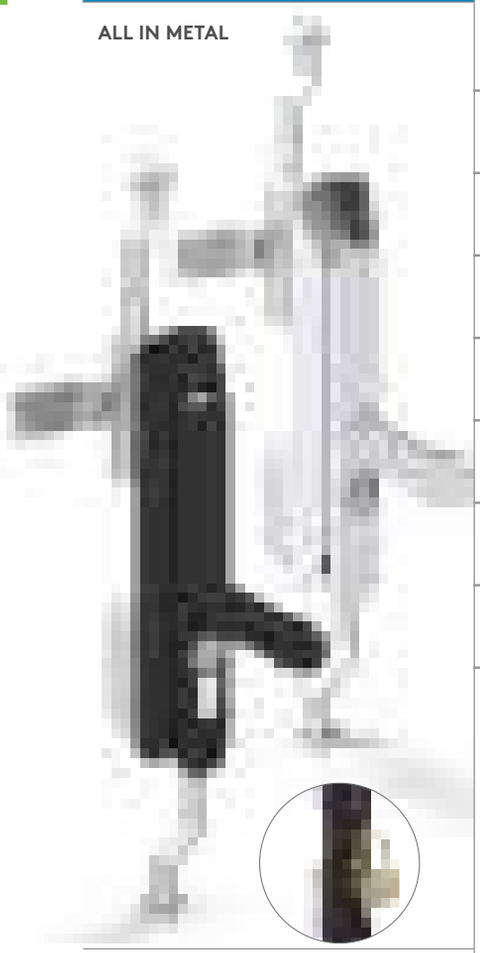

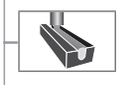

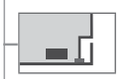
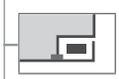


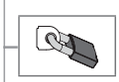
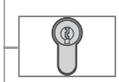

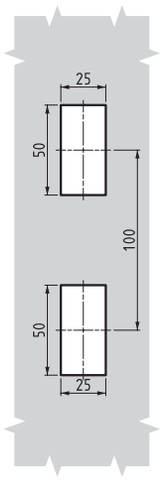

Cut Out

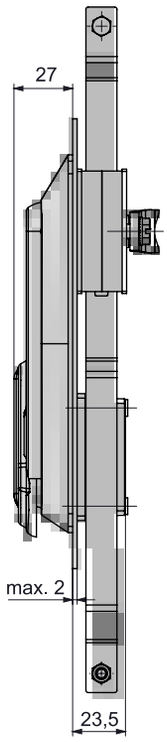

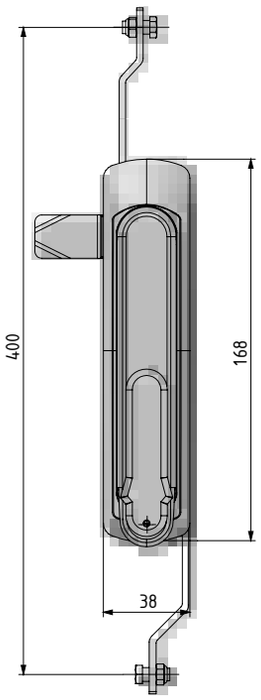



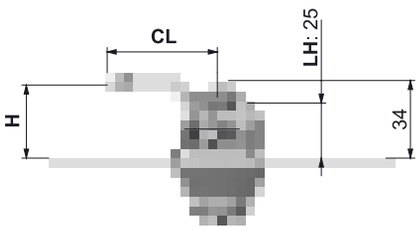

- All metal construction
- Swinghandle for steel and polyester cabinets
- 40 mm Euro Profile single cylinder fitted
- Improved corrosion resistance
- High-security, brass, Euro Profile single-cylinder available

MATERIAL

BODY	Zamak DIN-EN 1774-ZnAl4Cu1
HANDLE:	Zamak DIN-EN 1774-ZnAl4Cu1
COVER:	Zamak DIN-EN 1774-ZnAl4Cu1
MECHANISM:	Zamak DIN-EN 1774-ZnAl4Cu1
GASKET:	Polyurethane

CYLINDER TYPE		DD
	Keyed alike (Stainless steel dust cap)	03
	Keyed differ (Stainless steel dust cap)	32
	Master system	04
	Euro key (5333)	05
	CH751 (Stainless steel dust cap)	07
DRIVER TYPE		**DD**
	5 mm Double bit	15
	8 mm Square	28
	9 mm Triangular	39
	Eastern	91
HIGH-SECURITY CYLINDER (Zamak)		
	Keyed alike	22
	Keyed differ	23

MATERIAL	M	FINISH	F
Zamak	1	Chrome plated	1
		Black coated	2

Group Code	Handle		Body		Cylinder	Cam	Padlock*
602	1	F	1	F	DD	CC	

*: add **"1"** for padlock application

For cams please check pages: 170 - 171
For rods please check pages: 178 - 188
For keys please check pages: 189 - 191

tel | + 90 212 721 44 44 fax | + 90 212 721 44 45

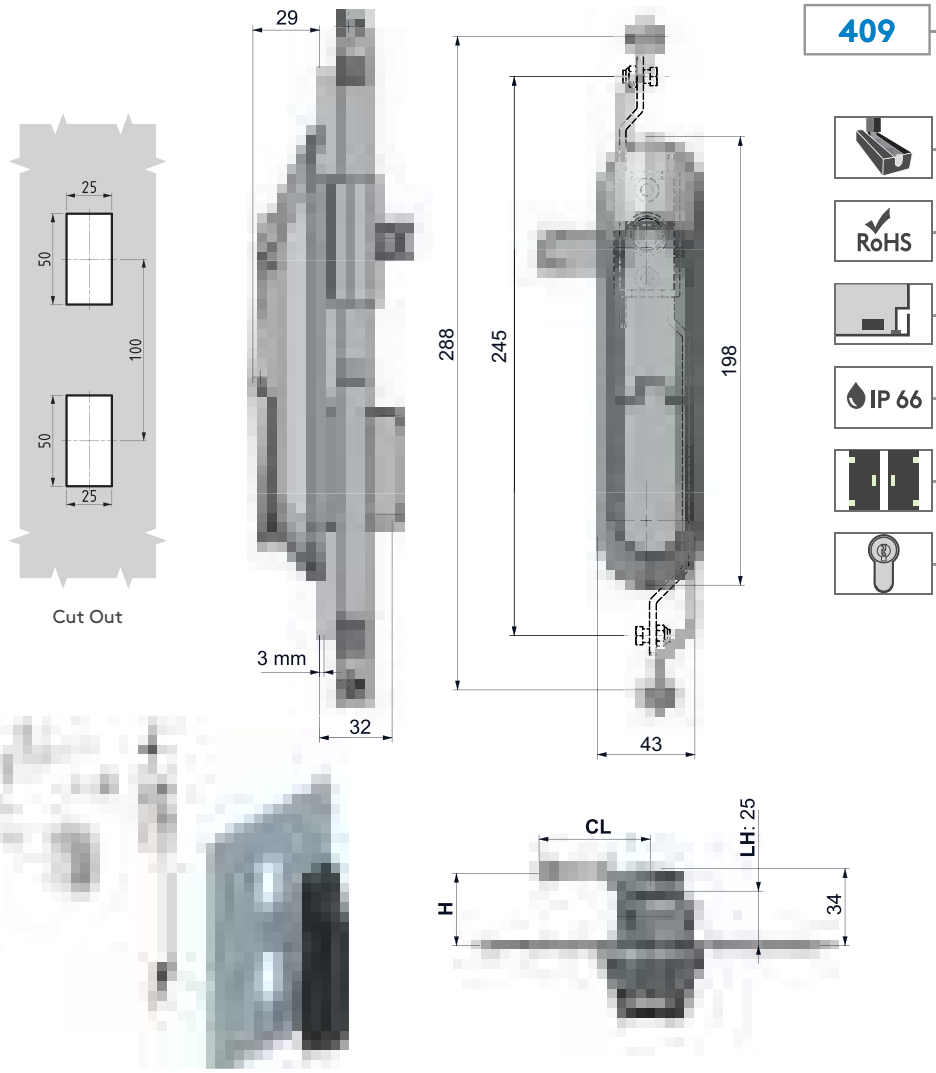

409 SWINGHANDLE GEAR BOX



- All metal construction
- Special geometry protects against vandalism
- **Complies with DIN EN 1627: 2011-09 RC2 test**
- Improved corrosion resistance
- Double o-ring used for handle improves IP rating
- High-security cylinder alternative
- Improved IP rating with moving dust cap

MATERIAL

BODY	Zamak DIN-EN 1774-ZnAl4Cu1
HANDLE:	Zamak DIN-EN 1774-ZnAl4Cu1
MECHANISM:	Zamak DIN-EN 1774-ZnAl4Cu1
GASKET:	Polyurethane
COVER:	Zamak DIN-EN 1774-ZnAl4Cu1
CAM:	Steel

CYLINDER TYPE		DD
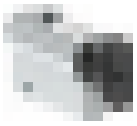	Keyed alike (Stainless steel dust cap)	03
	Keyed differ (Stainless steel dust cap)	32
	Master system	04
	Euro key (5333)	05
	CH751 (Stainless steel dust cap)	07
DRIVER TYPE		**DD**
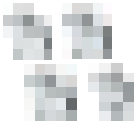	5 mm Double bit	15
	8 mm Square	28
	9 mm Triangular	39
	Eastern	91
HIGH-SECURITY CYLINDER (Zamak)		
	Keyed alike	22
	Keyed differ	23

MATERIAL	M	FINISH	F
Zamak	1	Black coated	2

Group Code	Version	Handle		Body		Cylinder	Cam
409	1	1	2	1	2	DD	CC

For cams please check pages: 170 - 171
For rods please check pages: 178 - 188
For keys please check pages: 189 - 191

SWINGHANDLE GEAR BOX

409

ALL IN METAL



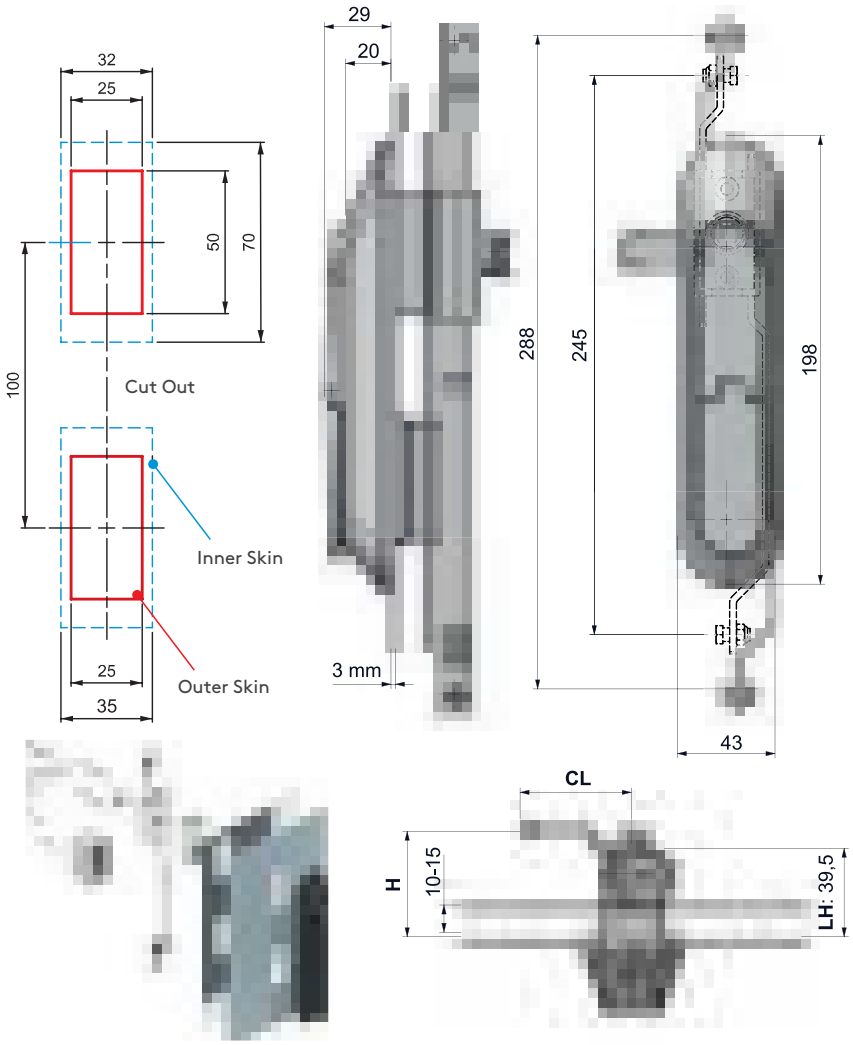

- All metal construction
- Special geometry protects against vandalism
- **Complies with DIN EN 1627: 2011-09 RC2 test**
- Double o-ring handle improves IP rating
- High-security cylinder alternative
- Improved IP rating with moving dust cap

MATERIAL

BODY	Zamak DIN-EN 1774-ZnAl4Cu1
HANDLE:	Zamak DIN-EN 1774-ZnAl4Cu1
MECHANISM:	Zamak DIN-EN 1774-ZnAl4Cu1
GASKET:	Polyurethane
COVER:	Zamak DIN-EN 1774-ZnAl4Cu1

For cams please check pages: 170 - 171
For rods please check pages: 178 - 188
For keys please check pages: 189 - 191

CYLINDER TYPE		DD
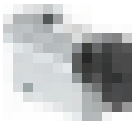	Keyed alike (Stainless steel dust cap)	03
	Keyed differ (Stainless steel dust cap)	32
	Master system	04
	Euro key (5333)	05
	CH751 (Stainless steel dust cap)	07
DRIVER TYPE		**DD**
	5 mm Double bit	15
	8 mm Square	28
	9 mm Triangular	39
	Eastern	91
HIGH-SECURITY CYLINDER (Zamak)		**DD**
	Keyed alike	22
	Keyed differ	23

MATERIAL	M	FINISH	F
Zamak	1	Black coated	2

Group Code	Version	Handle		Body		Cylinder	Cam
409	3	1	2	1	2	DD	CC

tel | + 90 212 721 44 44 fax | + 90 212 721 44 45

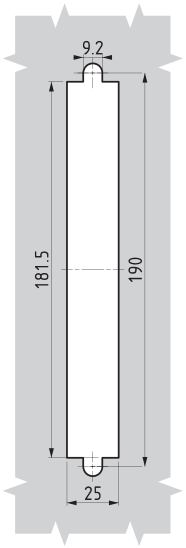

Cut Out

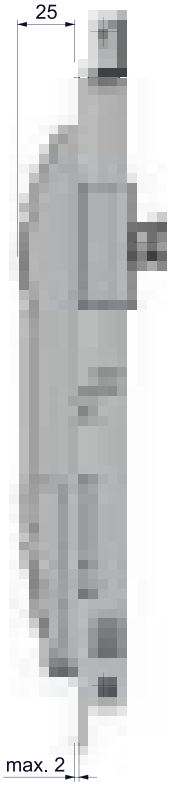

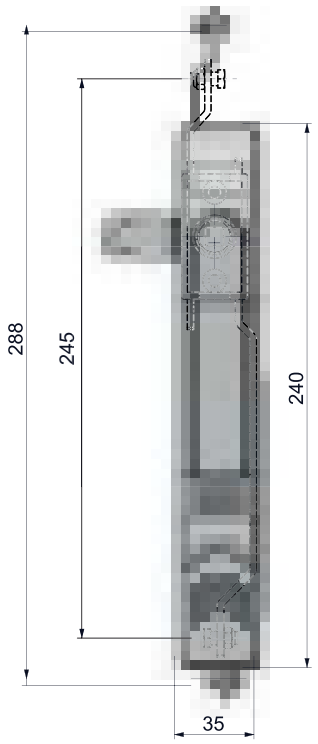

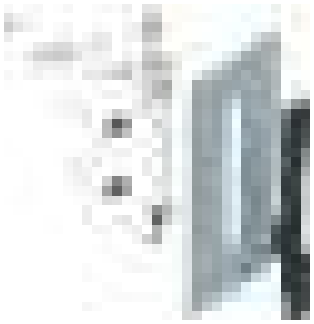

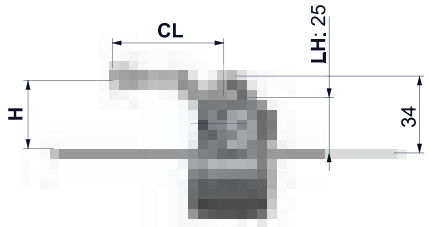

107 SWINGHANDLE GEAR BOX

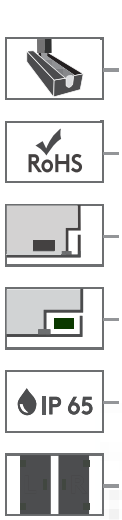



CYLINDER TYPE		DD
	Keyed alike (Stainless steel dust cap)	03
	Keyed differ (Stainless steel dust cap)	32
	Euro key (5333)	05
	CH751 (Stainless steel dust cap)	07
DRIVER TYPE		**DD**
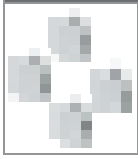	5 mm Double bit	15
	8 mm Square	28
	9 mm Triangular	39
	Button	55

MATERIAL	M	FINISH	F
Zamak	1	Chrome plated	1
		Black coated	2
Plastic	2	No finish	0

Group Code	Handle		Body		Driver Cylinder	Cam
107	1	F	2	0	DD	CC

- Suitable for indoor applications
- Spring-loaded , slam action swing handle
- Sliding dust cover
- Suited for outside gasketing application

MATERIAL

BODY	Polyamide DIN-EN ISO 1043-1 PA6 GFR 30
HANDLE	Zamak DIN-EN 1774-ZnAl4Cu1
MECHANISM:	Zamak DIN-EN 1774-ZnAl4Cu1
CAM:	Steel
GASKET:	Polyurethane

For cams please check pages: 170 - 171
For rods please check pages: 178 - 188
For keys please check pages: 189 - 191

SWINGHANDLE GEAR BOX

207



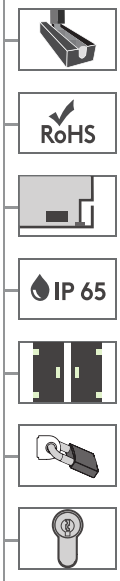

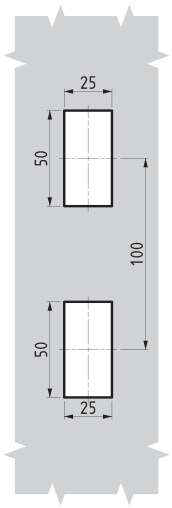

Cut Out

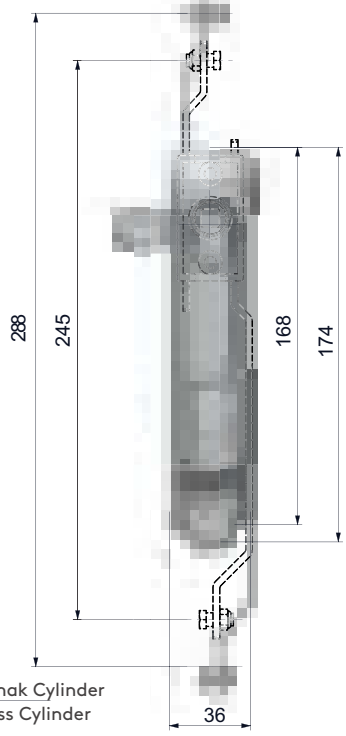

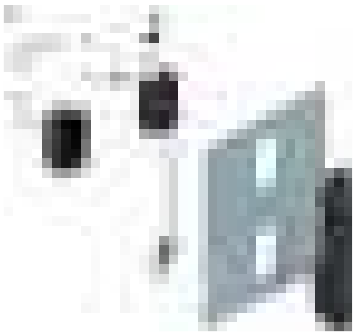

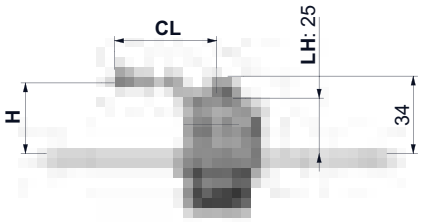

- Sliding dust cover
- Ergonomic handle
- Padlockable version available
- 40 mm Euro Profile cylinder fitted

MATERIAL

BODY:	Polyamide DIN-EN ISO 1043-1 PA6 GFR 30
HANDLE:	PA6 GFR 30
MECHANISM:	PA6 GFR 30
CAM:	Steel
GASKET:	Polyurethane

CYLINDER TYPE		DD
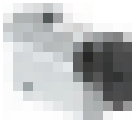	Keyed alike (Stainless steel dust cap)	03
	Keyed differ (Stainless steel dust cap)	32
	Master system	04
	Euro key (5333)	05
	CH751 (Stainless steel dust cap)	07
DRIVER TYPE		**DD**
	5 mm Double bit	15
	8 mm Square	28
	9 mm Triangular	39
	Eastern	91
BRASS CYLINDER		**DD**
	Keyed alike	11
NO CYLINDER		**DD**
	Plastic blind cylinder	24

Group Code	Handle		Body		Cylinder	Cam	Padlock*
207	2	0	2	0	DD	CC	

*: add **"1"** for padlock application

For cams please check pages: 170 - 171
For rods please check pages: 178 - 188
For keys please check pages: 189 - 191

tel | + 90 212 721 44 44 fax | + 90 212 721 44 45

307 SWINGHANDLE GEAR BOX

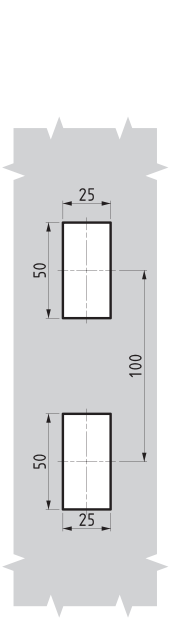

Cut Out

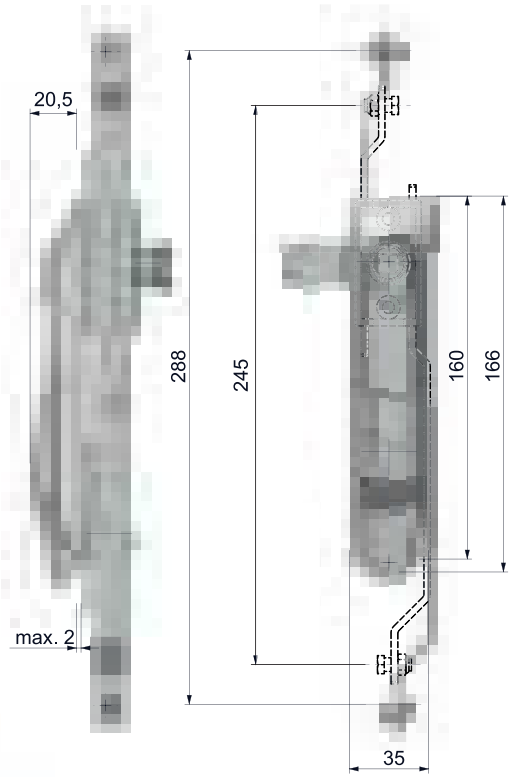



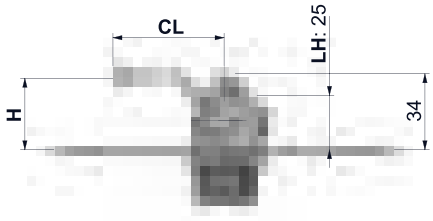

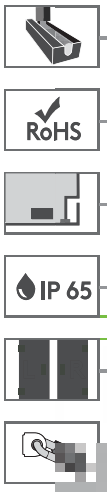



- Sliding dust cover
- Ergonomic handle
- Padlockable version available

MATERIAL

BODY	Polyamide DIN-EN ISO 1043-1 PA6 GFR 30
HANDLE:	PA6 GFR 30 or Zamak
MECHANISM:	PA6 GFR 30
CAM:	Steel
GASKET:	Polyurethane

CYLINDER TYPE		DD
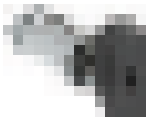	Keyed alike (Stainless steel dust cap)	03
	Keyed differ (Stainless steel dust cap)	32
	Euro key (5333)	05
	CH751 (Stainless steel dust cap)	07
DRIVER TYPE		**DD**
	5 mm Double bit	15
	8 mm Square	28
	9 mm Triangular	39

MATERIAL	M	FINISH	F
Zamak	1	Chrome plated	1
		Black coated	2
Plastic	2	No finish	0

Group Code	Handle		Body		Driver Cylinder	Cam	Padlock*
307	M	F	2	0	DD	CC	

*: add "1" for padlock application

For cams please check pages: 170 - 171
For rods please check pages: 178 - 188
For keys please check pages: 189 - 191

ROD-LATCH SYSTEM

MODULAR SYSTEM SWINGHANDLE — **407**



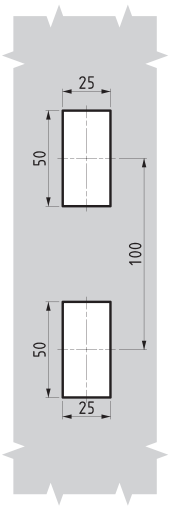

Cut Out

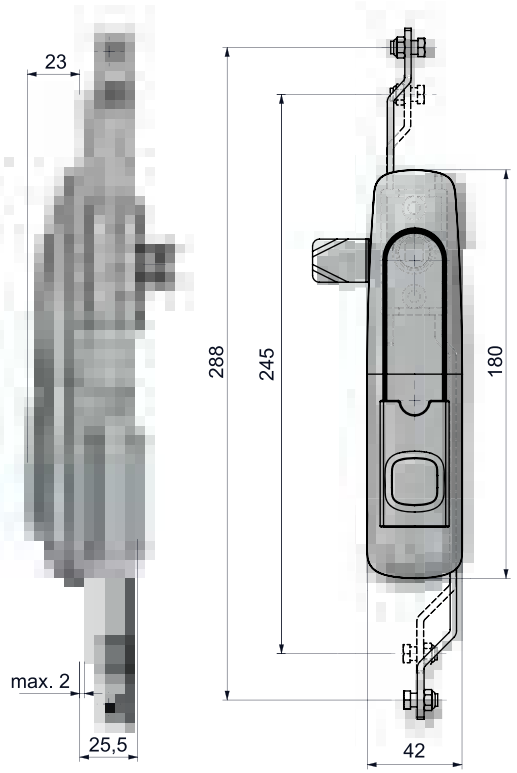

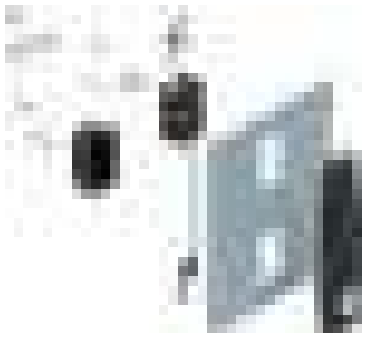

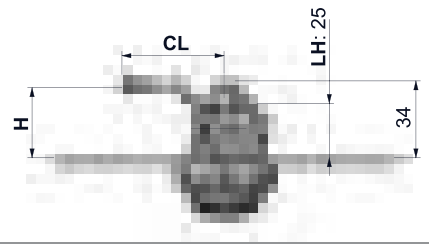

- Swing handle has a modular lock structure allows easy modification for customer requests
- Lock and modules could be ordered seperately
- Single point locking and gearbox option is possible on same lock by an adaptor
- Padlock is optional
- Easy fixing option by plastic clips

MATERIAL

BODY	PA6 GFR 30
HANDLE	Zamak DIN-EN 1774-ZnAl4Cu1
MECHANISM:	PA6 GFR 30
MODULE	Zamak
CAM:	Steel

CYLINDER TYPE	DD	Order code
Stainless steel dust cap (Keyed alike)	03	MDL03
Stainless steel dust cap (Keyed differ)	32	MDL32
Euro key (5333)	05	MDL05
CH751 (Stainless steel dust cap)	07	MDL07
DRIVER TYPE	**DD**	**Order code**
5 mm Double bit	15	MDL15
8 mm Square	28	MDL28
9 mm Triangular	39	MDL39
Button	55	MDL55
BRASS CYLINDER	**DD**	**Order code**
Keyed alike	11	MDL11

MATERIAL	M	FINISH	F
Zamak	1	Chrome plated	1
		Black coated	2
Plastic	2	No finish	0

Group Code	Handle		Body		Module	Cam	Assembly	Padlock*
407	1	F	2	0	DD	CC	A	

*: add "1" for padlock application

For cams please check pages: 170 - 171
For rods please check pages: 178 - 188
For keys please check pages: 189 - 191

tel | + 90 212 721 44 44 fax | + 90 212 721 44 45

Due to the modular structure, the swing-handle can be easily modified to the desired locking system

Modules can be ordered separately.

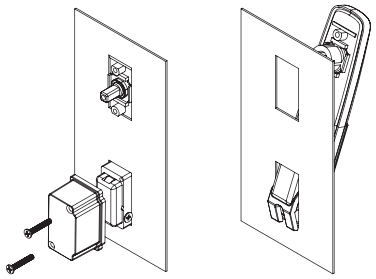

With cover

A : 1

With clip

A : 2

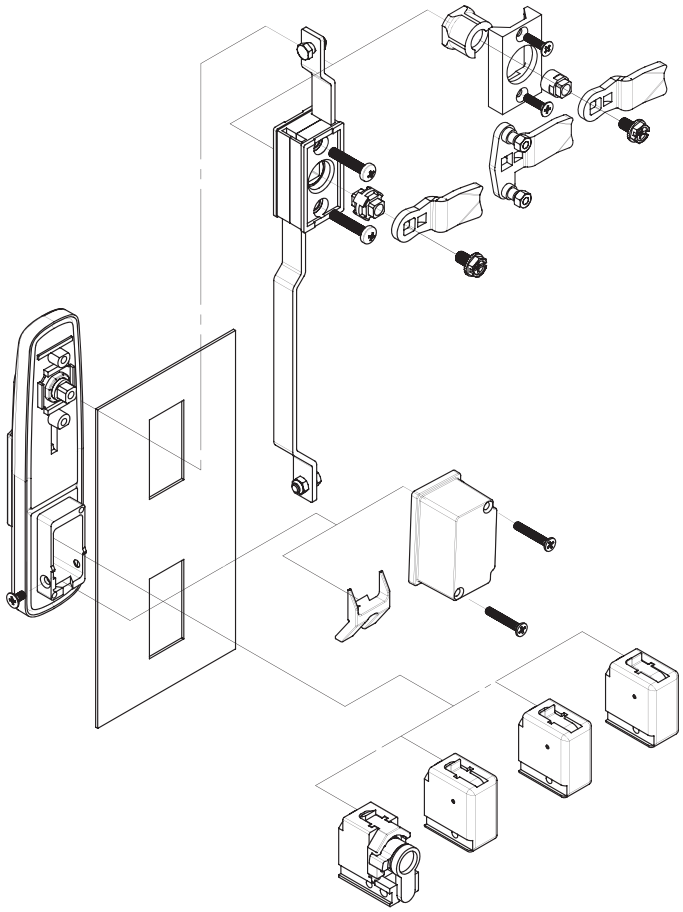

The set items can be ordered seperately with their codes in below

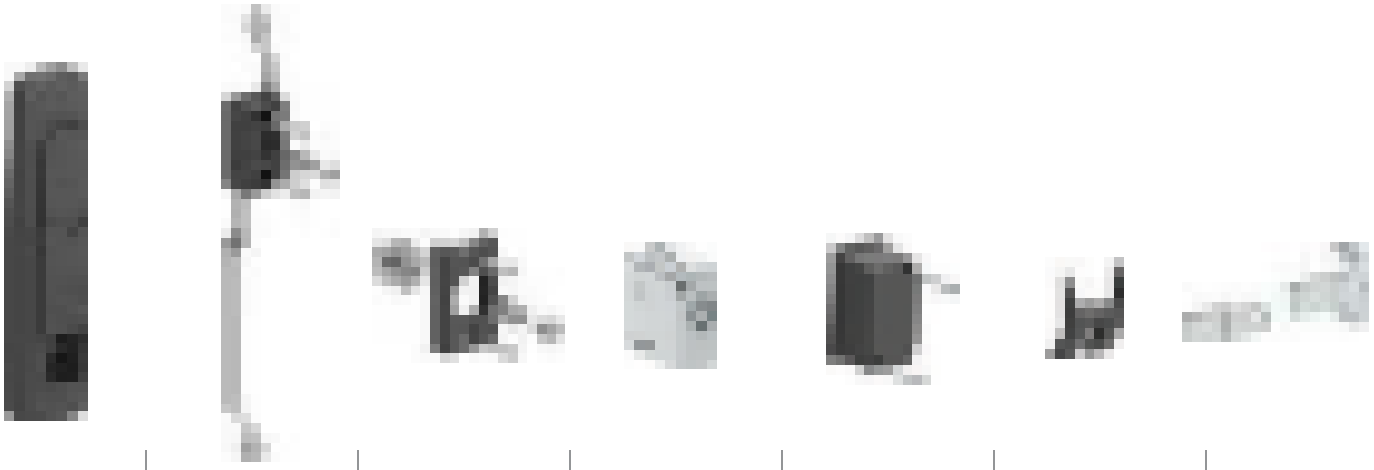

MLS01	MLS02	MLS03	MDLXX	MLS05	320.02.246	DİLLER
1-SET: • Body • Handle • Dust cap • Shaft	1-SET: • Plastic Mechanism • Screws • Cam Adapter **For multi point locking**	1-SET: • Plastic Fixed Part • Screws • Cam Adapter **For single point locking**	MODULES • MDLXX **Please check the previous page**	1-SET: • Plastic Fixed Part • Screws **With this set the handle meet IP 65 specs.**	1-PCS • Clip-in part **With this clip-in part mounting time reduces by %50**	**Please check the cams page 172 - 173**

LINEAR HANDLE LOCK 204



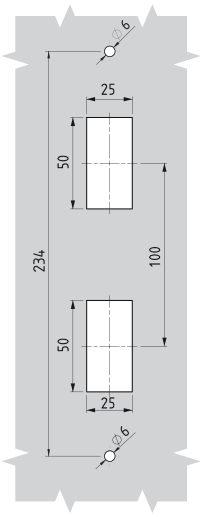

Cut Out

V:1

With mechanism

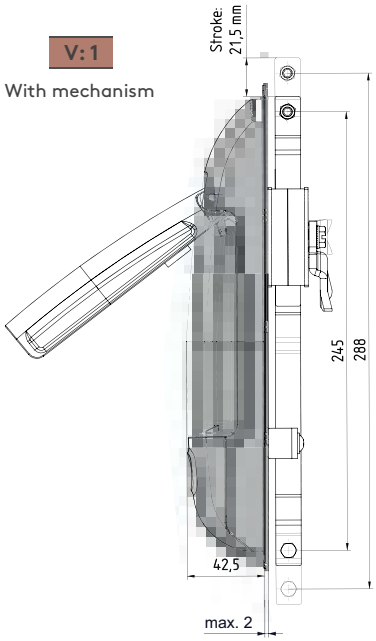

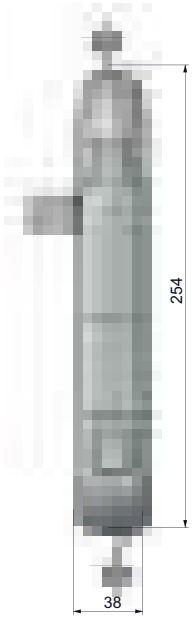



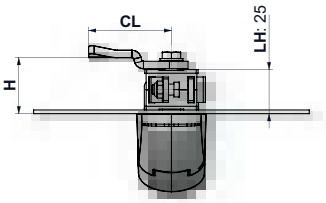

OPTION

Sliding dust cover 1

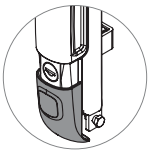

Fixed cover 2

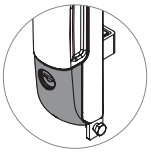

- Ergonomic and modern design
- Locking and unlocking by linear movement
- Suitable for inside & outside gasketing applications
- Swing handle has a modular lock structure allows easy modification for customer requests
- Standard or special rods allows locking to both directions

MATERIAL

BODY	PA6 GFR 30
HANDLE	Zamak DIN-EN 1774-ZnAl4Cu1
MECHANISM:	Steel
CAM:	Steel
GASKET:	Polyurethane

Note: For different colors please contact Essentra

CYLINDER TYPE		DD
	Stainless steel dust cap (Keyed alike)	03
	Stainless steel dust cap (Keyed differ)	32
	Euro key (5333)	05
	CH751 (Stainless steel dust cap)	07
DRIVER TYPE		**DD**
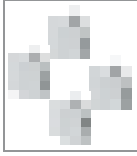	5 mm Double bit	15
	8 mm Square	28
	9 mm Triangular	39
	Button	55

MATERIAL	M	FINISH	F
Zamak	1	Chrome plated	1
		Black coated	2

Group Code	Version	Handle		Body		Modul	Cam	Option
204	V	1	F	2	0	DD	CC	O

For cams please check pages: 170 - 171
For rods please check pages: 178 - 188
For keys please check pages: 189 - 191

tel | + 90 212 721 44 44 fax | + 90 212 721 44 45

204 LINEAR HANDLE LOCK

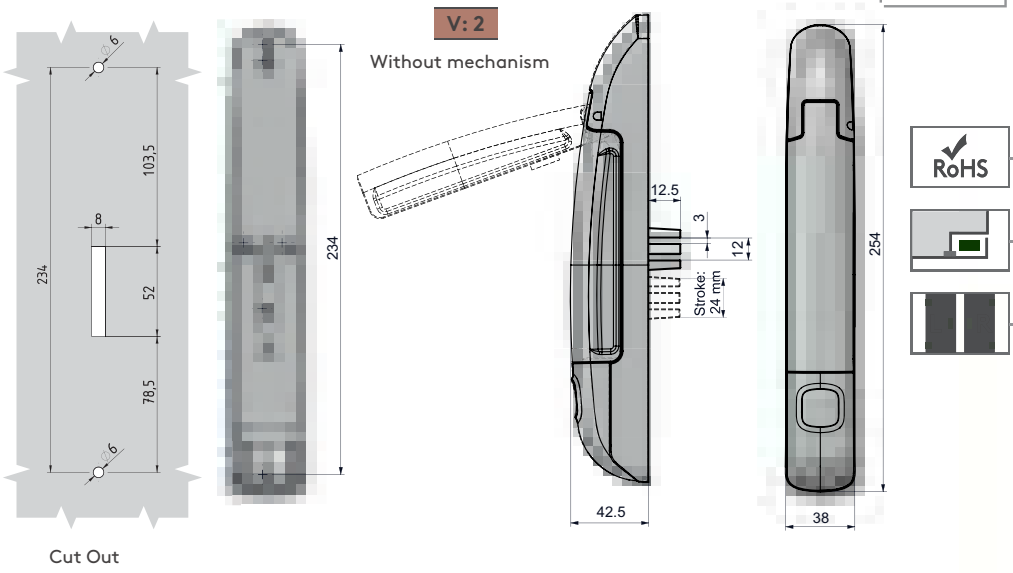

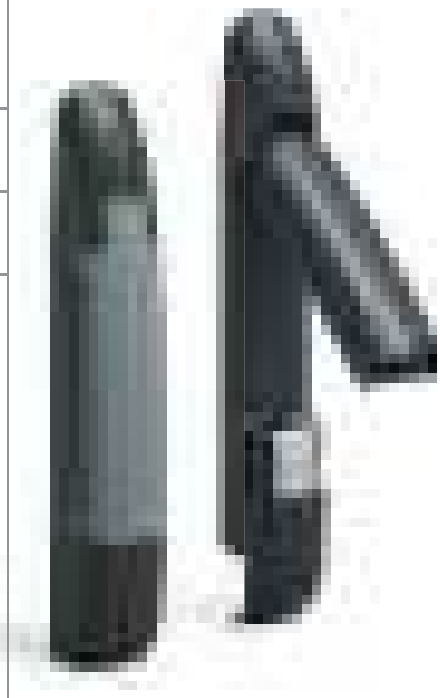

- Ergonomic and modern design
- Locking and unlocking by linear movement
- Suitable for inside & outside gasketing applications
- Swing handle has a modular lock structure allows easy modification for customer requests
- Standard or special rods allows locking to one direction

MATERIAL

BODY	PA6 GFR 30
HANDLE	Zamak DIN-EN 1774-ZnAl4Cu1
MECHANISM:	Steel

Example application of V:2 (standard flat rod):

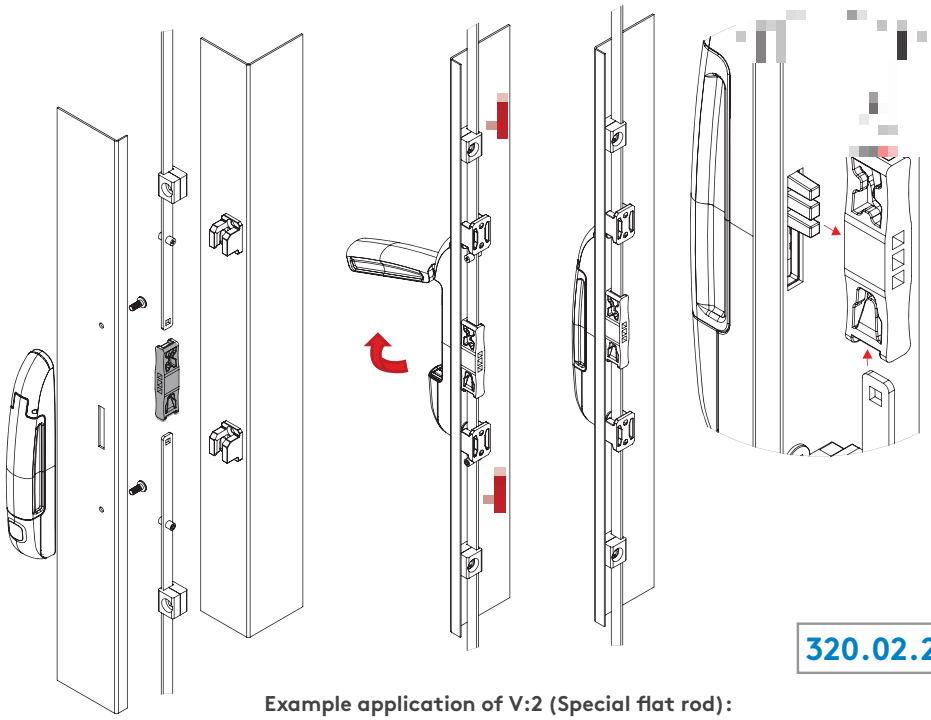

320.02.225 FLAT ROD EASY ASSEMBLY PART

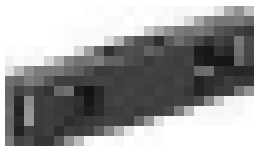

- Allows easy mounting of the flat rods

MATERIAL
PA6 GFR 30

Example application of V:2 (Special flat rod):

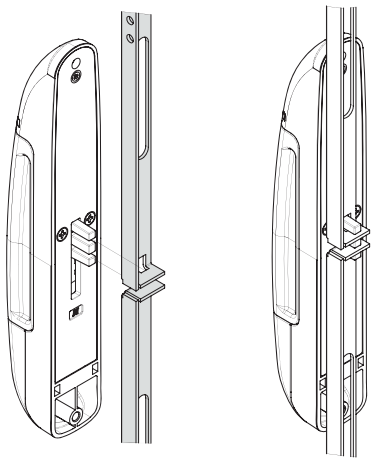

For rods please check pages: 178 - 188
For keys please check pages: 189 - 191

LINEAR HANDLE LOCK 104

ALL IN METAL

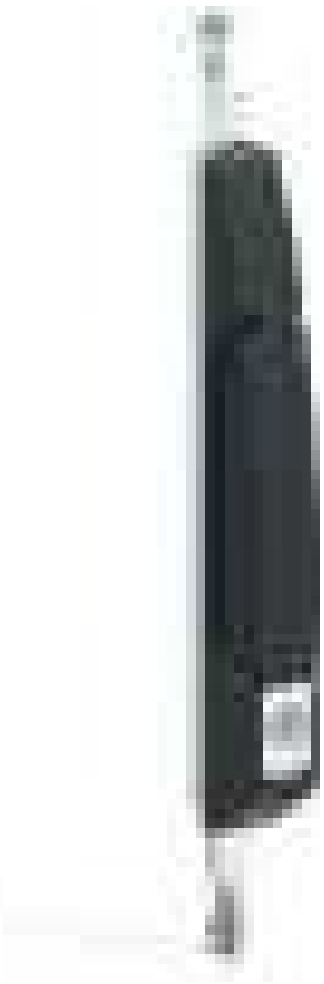

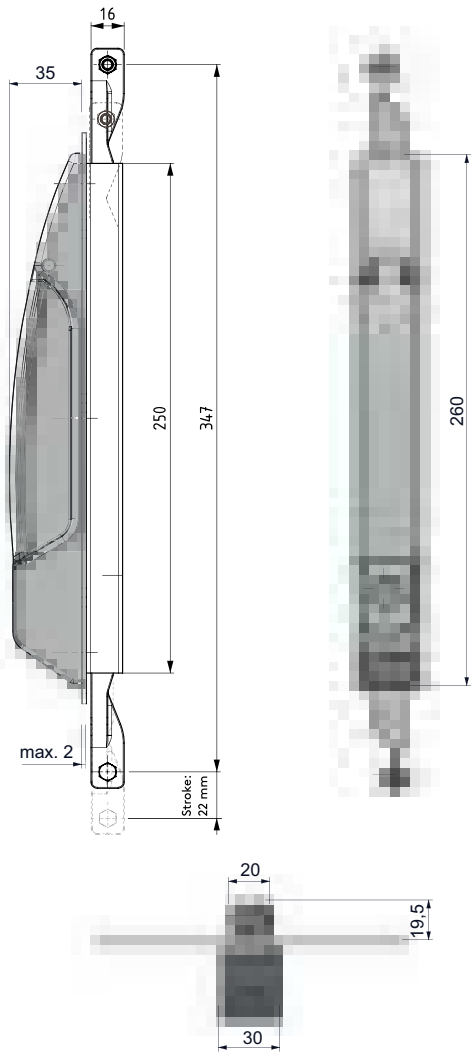

- Locking and unlocking by linear movement
- Suitable for out-of-gasket applications

MATERIAL

BODY	Zamak DIN-EN 1774-ZnAl4Cu1
HANDLE	Zamak DIN-EN 1774-ZnAl4Cu1
MECHANISM:	Steel
CAM:	Steel
GASKET:	Polyurethane

CYLINDER TYPE		DD
	Keyed alike(Stainless steel dust cap)	03
	Keyed differ(Stainless steel dust cap)	32
	Euro key (5333)	05
	CH751 (Stainless steel dust cap)	07
DRIVER TYPE		**DD**
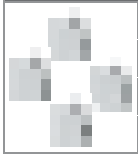	5 mm Double bit	15
	8 mm Square	28
	9 mm Triangular	39
	Button	55

MATERIAL	M	FINISH	F
Zamak	1	Chrome plated	1
		Black coated	2

Group Code	Handle		Body		Module
104	1	F	1	F	DD

tel | + 90 212 721 44 44 fax | + 90 212 721 44 45

104 LINEAR HANDLE LOCK

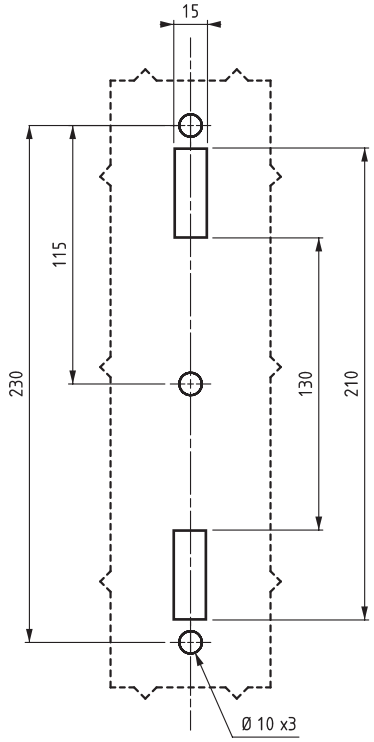

Cut Out

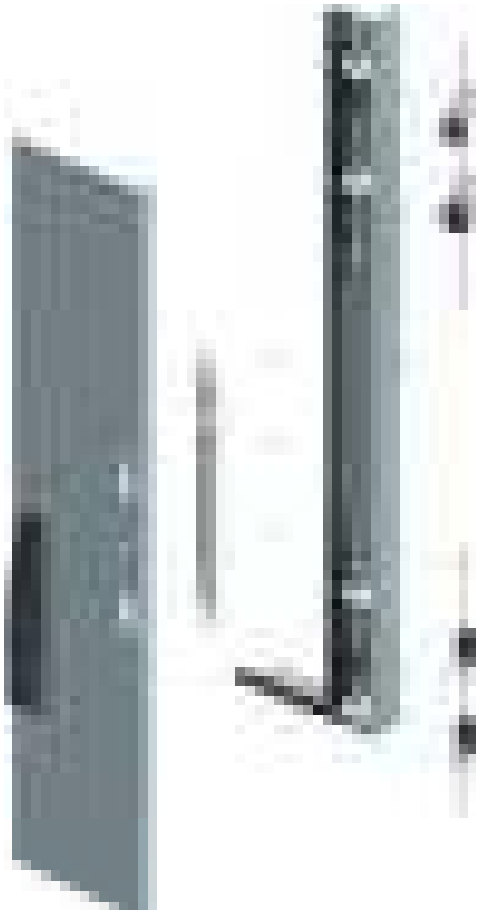

Application

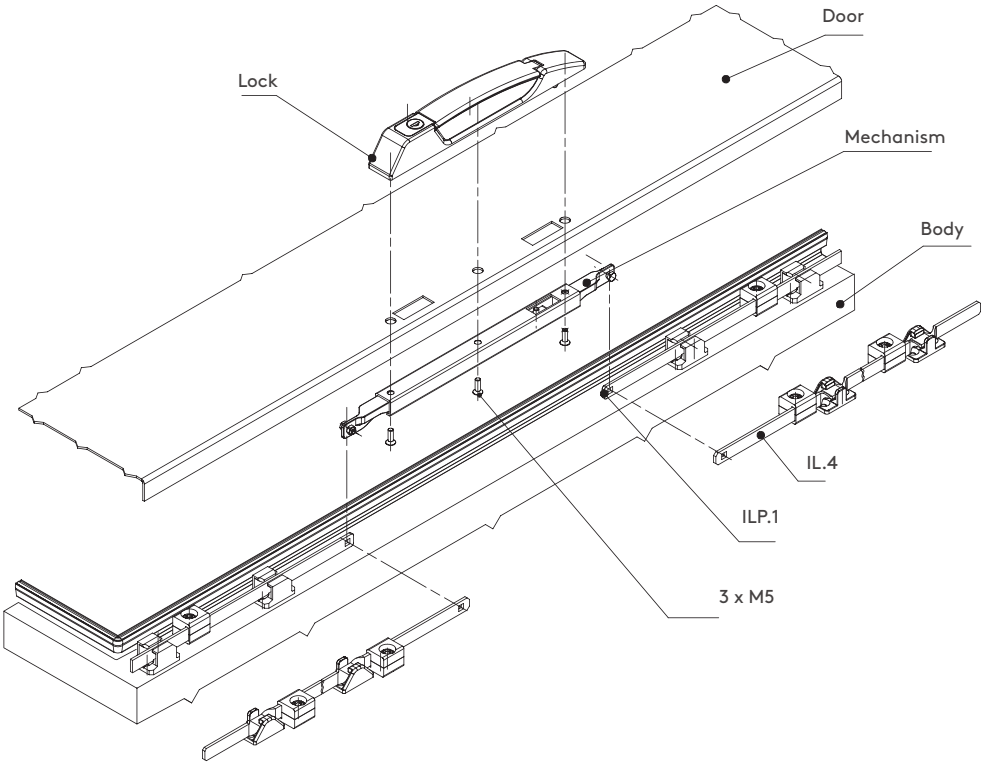

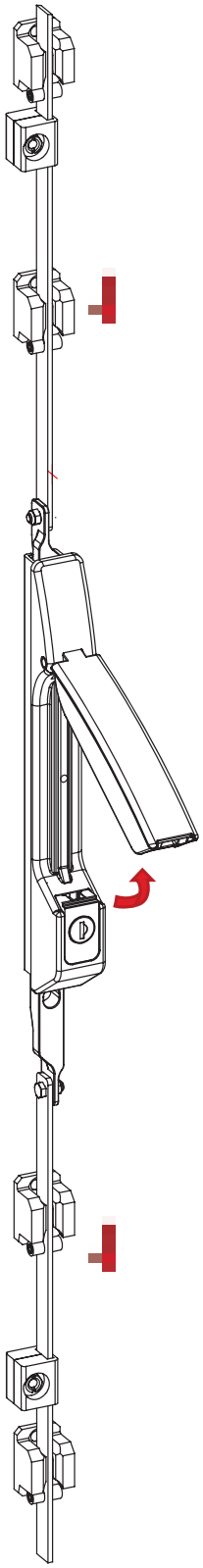

SWINGHANDLE GEAR BOX 109

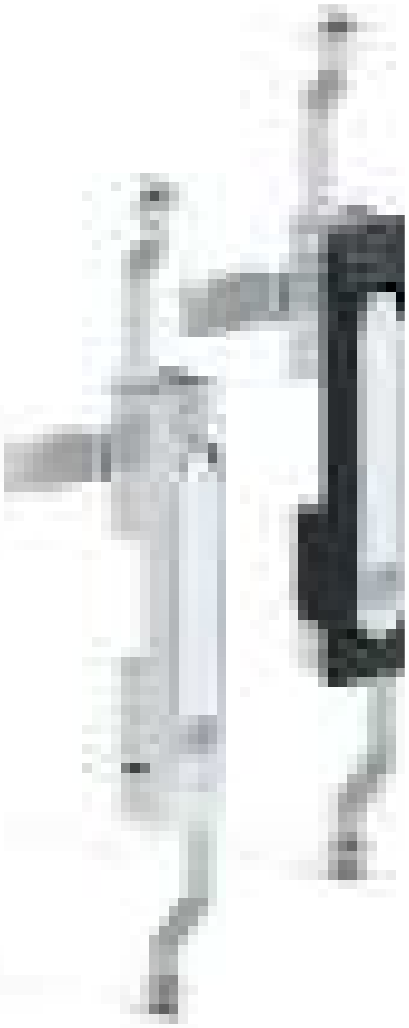

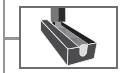

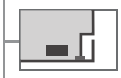



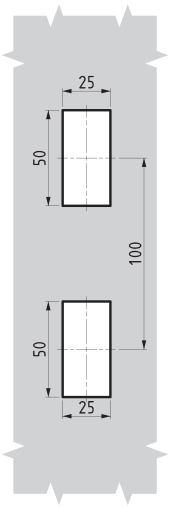

Cut Out

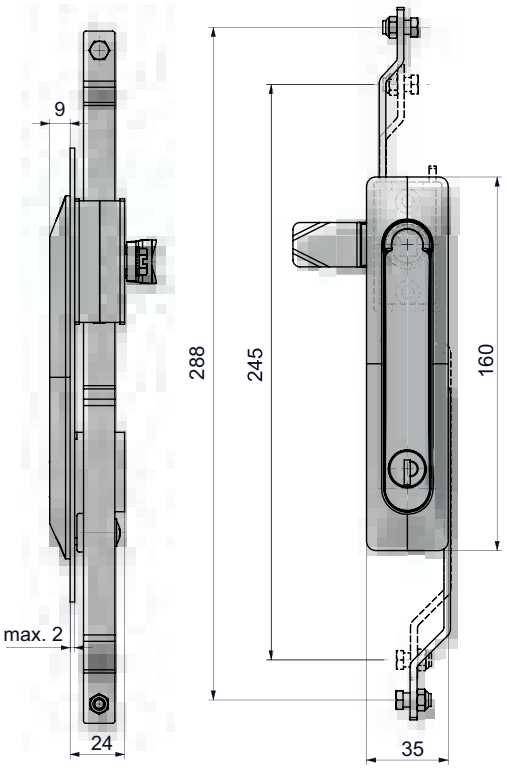



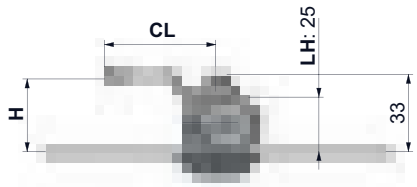

- Ultra-low external profile, just 9 mm, for flush appearance
- Spring loaded, slam-action swinghandle

MATERIAL

BODY	Zamak DIN-EN 774-ZnAl4Cu1 or PA6 GFR 30
HANDLE	Zamak DIN-EN 1774-ZnAl4Cu1
MECHANISM:	Zamak DIN-EN 1774-ZnAl4Cu1
CAM:	Steel
GASKET:	Polyurethane

CYLINDER TYPE	DD
Keyed alike (Stainless steel dust cap)	03
Keyed differ (Stainless steel dust cap)	32
Master system	04
Euro key (5333)	05
CH751 (Stainless steel dust cap)	07
DRIVER TYPE	**DD**
5 mm Double bit	15
8 mm Square	28
9 mm Triangular	39
HIGH-SECURITY CYLINDER	**DD**
Keyed alike	20
Keyed differ	21

MATERIAL	M	FINISH	F
Zamak	1	Chrome plated	1
		Black coated	2
Plastic	2	No finish	0

Group Code	Handle		Body		Driver Cylinder	Cam
109	1	F	M	F	DD	CC

For cams please check pages: 170 - 171
For rods please check pages: 178 - 188
For keys please check pages: 189 - 191

tel | + 90 212 721 44 44 fax | + 90 212 721 44 45

909 SWINGHANDLE GEAR BOX

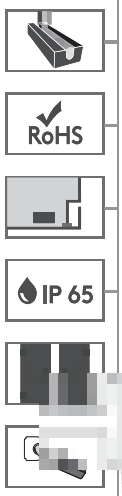

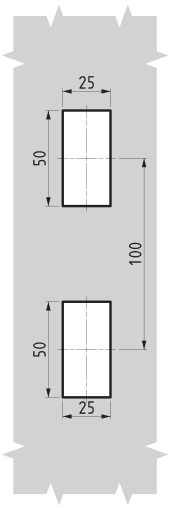

Cut Out

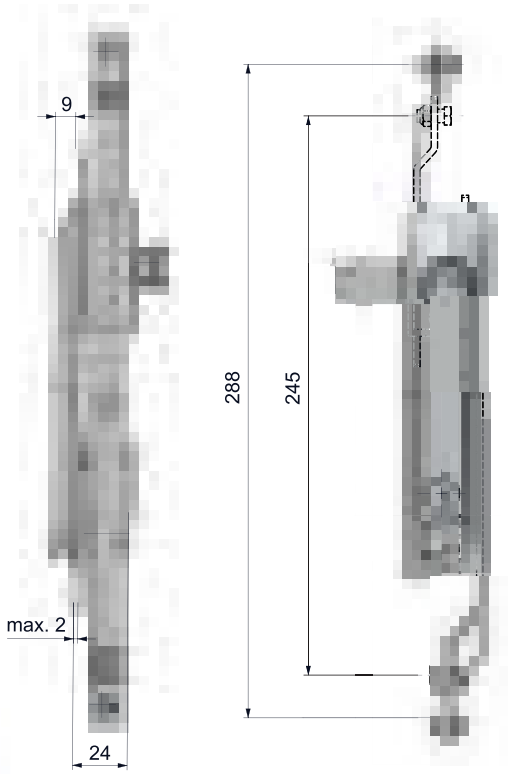



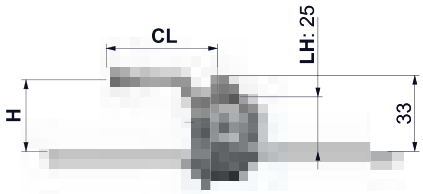

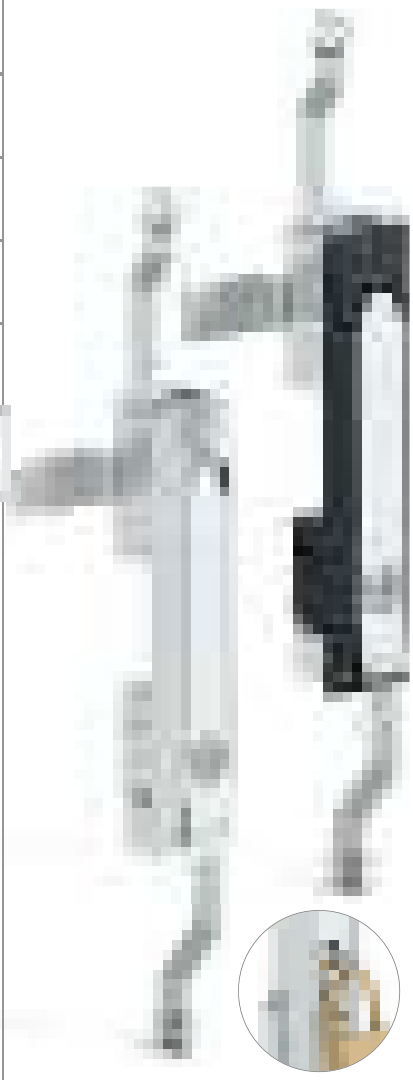

- Swing handle with push button
- Standard cut out
- Ultra low external profile, just 9 mm, to give flush appearance

MATERIAL

BODY	Zamak DIN-EN 774-ZnAl4Cu1 or PA6 GFR 30
MECHANISM:	Zamak DIN-EN 1774-ZnAl4Cu1
HANDLE	Zamak DIN-EN 1774-ZnAl4Cu1
CAM:	Steel
GASKET:	Polyurethane

CYLINDER TYPE		DD
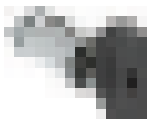	No Cylinder	00
	Keyed alike (Stainless steel dust cap)	03
	Keyed differ (Stainless steel dust cap)	32
	Master sistem	04
	Euro key (5333)	05
	CH751 (Stainless steel dust cap)	07
DRIVER		**DD**
	5 mm Double bit	15
	8 mm Square	28
	9 mm Triangular	39

MATERIAL	M	FINISH	F
Zamak	1	Chrome plated	1
		Black coated	2
Plastik	2	No finish	0

Group Code	Handle		Body		Driver Cylinder	Cam	Padlock*
909	1	F	M	F	DD	CC	

*: add "1" for padlock application

For cams please check pages: 170 - 171
For rods please check pages: 178 - 188
For keys please check pages: 189 - 191

SWINGHANDLE GEAR BOX 109

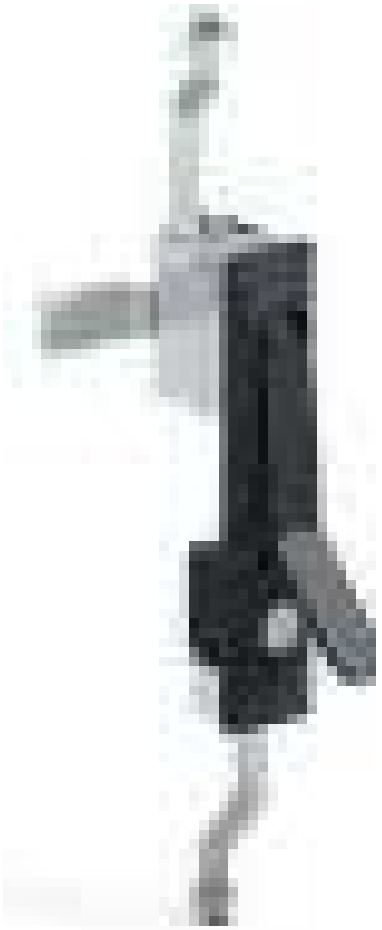

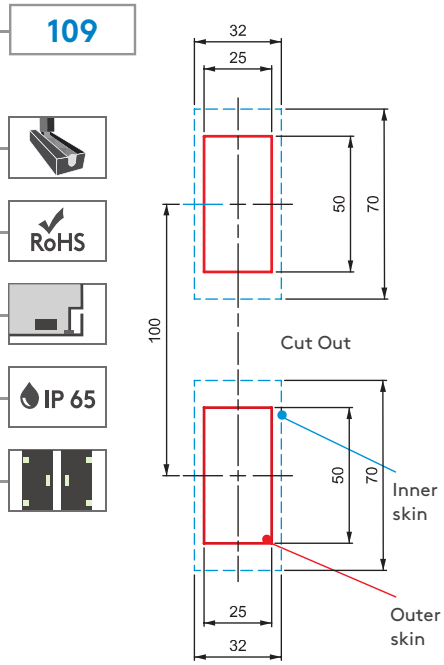

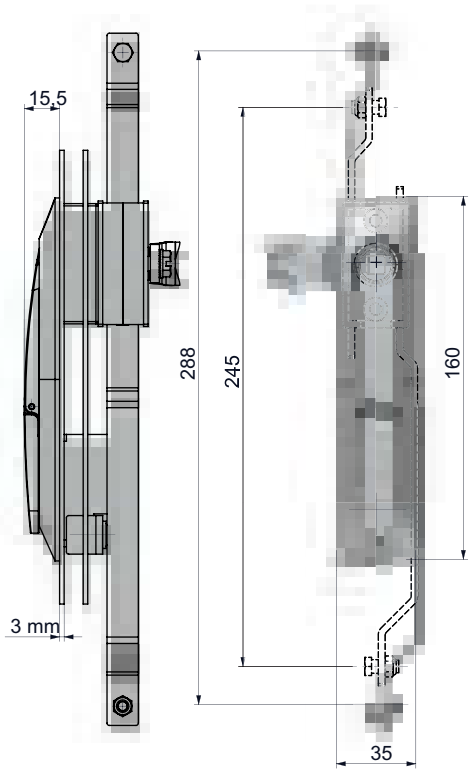



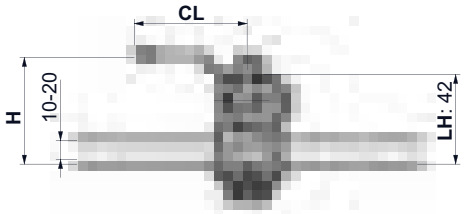

The swing handle can be modified per double-skin panel thickness.

- Ideal for double-skin doors and outdoor cabinets
- Stronger body to protect against vandalism
- High-security cylinder with specially shaped key prevents unauthorized duplication
- Improved IP resistance with moving dust cap
- Spring-loaded handle, slam action

MATERIAL

BODY	Zamak DIN-EN 1774-ZnAl4Cu1
HANDLE:	Zamak DIN-EN 1774-ZnAl4Cu1
MECHANISM:	Zamak DIN-EN 1774-ZnAl4Cu1
CAM:	Steel
GASKET:	Polyurethane

For cams please check pages: 170 - 171
For rods please check pages: 178 - 188

CYLINDER TYPE	DD
Keyed alike (Stainless steel dust cap)	03
Keyed differ (Stainless steel dust cap)	32
Master system	04
Euro key (5333)	05
CH751 (Stainless steel dust cap)	07
DRIVER TYPE	**DD**
5 mm Double bit	15
8 mm Square	28
9 mm Triangular	39
HIGH-SECURITY CYLINDER	**DD**
Keyed alike	20
Keyed differ	21

MATERIAL	M	FINISH	F
Zamak	1	Chrome plated	1
		Black coated	2

Group Code	Version	Handle		Body		Cylinder	Cam
109	3	1	F	1	F	DD	CC

tel | + 90 212 721 44 44 fax | + 90 212 721 44 45

109 SWINGHANDLE GEAR BOX

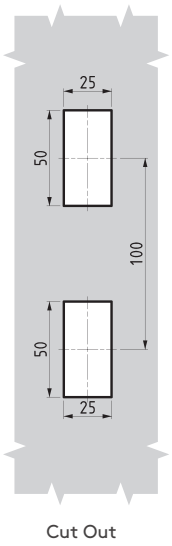

Cut Out

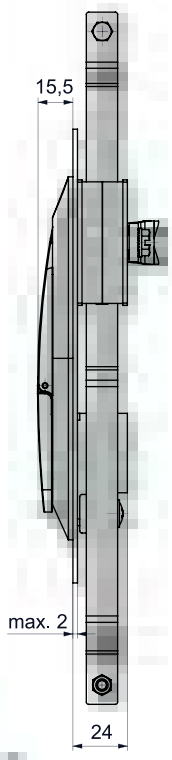

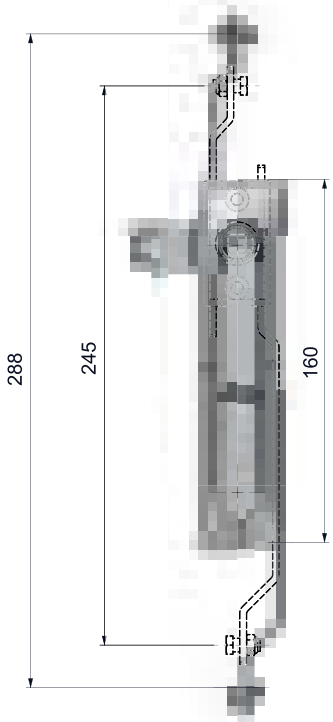



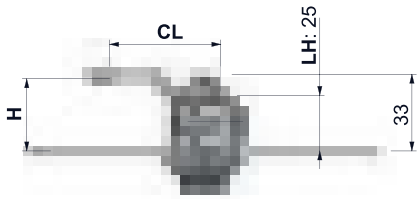



CYLINDER TYPE		DD
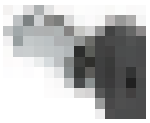	Keyed alike (Stainless steel dust cap)	03
	Keyed differ (Stainless steel dust cap)	32
	Master system	04
	Euro key (5333)	05
	CH751 (Stainless steel dust cap)	07
DRIVER TYPE		**DD**
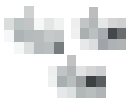	5 mm Double bit	15
	8 mm Square	28
	9 mm Triangular	39
HIGH-SECURITY CYLINDER		**DD**
	Keyed alike	20
	Keyed differ	21

MATERIAL	M	FINISH	F
Zamak	1	Chrome plated	1
		Black coated	2

Group Code	Version	Handle		Body		Cylinder	Cam
109	2	1	F	1	F	DD	CC

- All metal construction
- Improved corrosion resistance
- High-security cylinder alternative
- Improved IP resistance with moving dust cap

MATERIAL

BODY	Zamak DIN-EN 1774-ZnAl4Cu1
HANDLE	Zamak DIN-EN 1774-ZnAl4Cu1
MECHANISM:	Zamak DIN-EN 1774-ZnAl4Cu1
CAM:	Steel
GASKET:	Polyurethane

For cams please check pages: 170 - 171
For rods please check pages: 178 - 188
For keys please check pages: 189 - 191

SWINGHANDLE GEAR BOX 309

SMALL VERSION

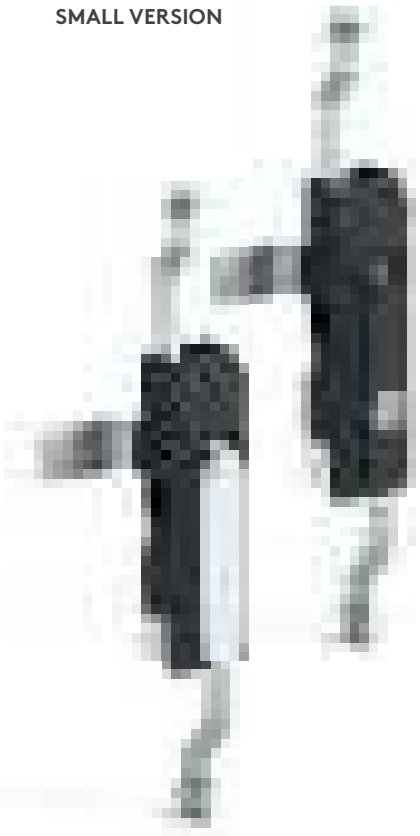

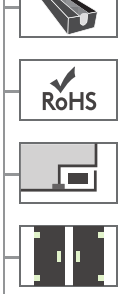

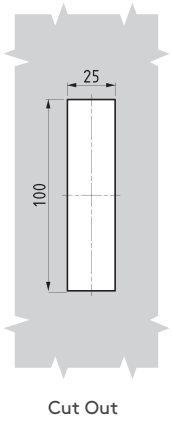

Cut Out

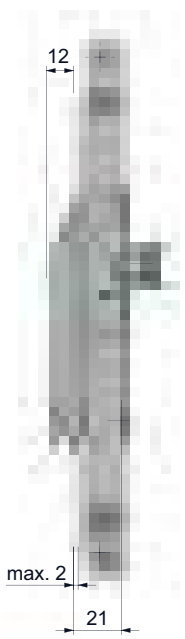

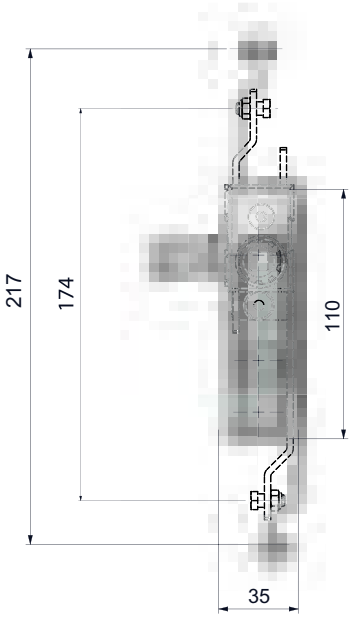



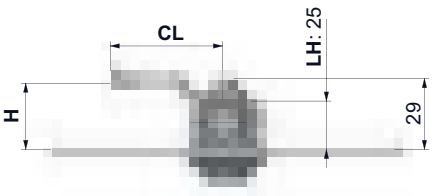

- **Large version: page 75**
- Swinghandle can be applied outside gasketing
- Special gear-box is used
- Three-point locking
- 25 mm x 100 mm cut out

MATERIAL

BODY	Polyamide DIN-EN ISO 1043-1 PA6 GFR 30
MECHANISM:	PA66
HANDLE	Zamak DIN-EN 1774-ZnAl4Cu1 or PA6 GFR 30
GASKET:	Polyurethane

For cams please check pages: 170 - 171
For rods please check pages: 178 - 188

CYLINDER TYPE	DD
No Cylinder	00
Keyed alike (Stainless steel dust cap)	03
Keyed differ (Stainless steel dust cap)	32
Master system	04
Euro key (5333)	05
CH751 (Stainless steel dust cap)	07

MATERIAL	M	FINISH	F
Zamak	1	Chrome plated	1
		Black coated	2
Plastic	2	No finish	0

Group Code	Handle		Body		Driver Cylinder	Cam
309	M	F	2	0	DD	CC

tel | + 90 212 721 44 44 fax | + 90 212 721 44 45

209 SWINGHANDLE GEAR BOX

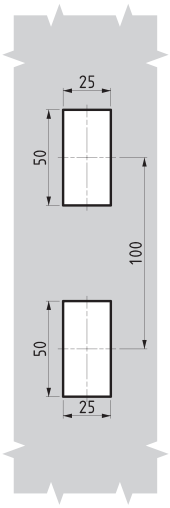

Cut Out

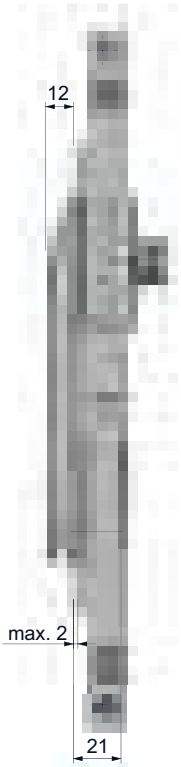

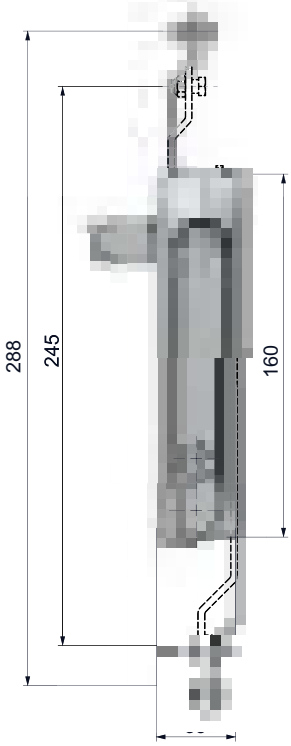

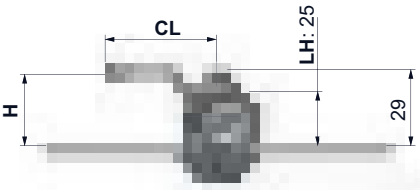

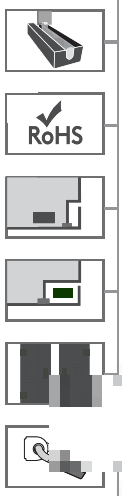





CYLINDER TYPE		DD
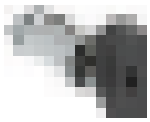	No Cylinder	00
	Keyed alike (Stainless steel dust cap)	03
	Keyed differ (Stainless steel dust cap)	32
	Master system	04
	Euro key (5333)	05
	CH751 (Stainless steel dust cap)	07
DRIVER TYPE		**DD**
	5 mm Double bit	15
	8 mm Square	28
	9 mm Triangular	39

MATERIAL	M	FINISH	F
Zamak	1	Chrome plated	1
		Black coated	2
Plastic	2	No finish	0

Group Code	Handle		Body		Driver Cylinder	Cam	Padlock*
209	M	F	M	F	DD	CC	

*: add "1" for padlock application
(All in metal only is applied)

- Handle is not spring loaded and slam action
- Key can be removed at unlocked position.

MATERIAL

BODY:	Zamak DIN-EN 1774-ZnAl4Cu1 or PA6 GFR 30
HANDLE:	Zamak DIN-EN 1774-ZnAl4Cu1 or PA6 GFR 30
MECHANISM:	PA6 GFR 30
CAM:	Steel
GASKET:	Polyurethane

For cams please check pages: 170 - 171
For rods please check pages: 178 - 188

SWINGHANDLE GEAR BOX 007



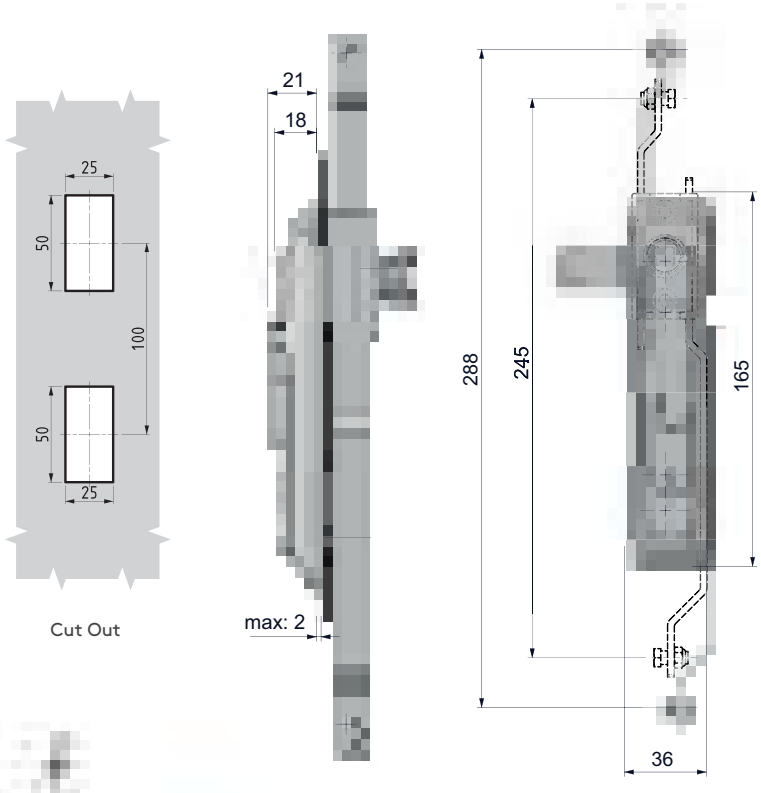



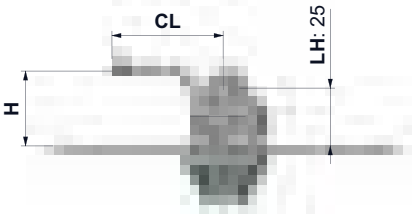

- Lower strength swing-handle that accepts cylindrical drivers only
- Spring-loaded, slam-action swinghandle
- Can use indoors
- Competitive price with polyamide gearbox

MATERIAL

BODY	Polyamide DIN-EN ISO 1043-1 PA6 GFR 30
HANDLE:	PA6 GFR 30
MECHANISM:	PA6 GFR 30
CAM:	Steel
GASKET:	Polyurethane

CYLINDER TYPE		DD
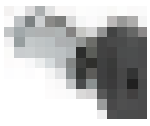	Keyed alike (Stainless steel dust cap)	03
	Keyed differ (Stainless steel dust cap)	32
	Master system	04
	Euro key (5333)	05
	CH751 (Stainless steel dust cap)	07
DRIVER TYPE		**DD**
	5 mm Double bit	15
	8 mm Square	28
	9 mm Triangular	39

Group Code	Driver Cylinder	Cam
007	DD	CC

For cams please check pages: 170 - 171
For rods please check pages: 178 - 188
For keys please check pages: 189 - 191

tel | + 90 212 721 44 44 fax | + 90 212 721 44 45

809 SWINGHANDLE GEAR BOX

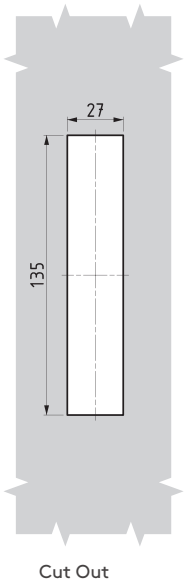

Cut Out

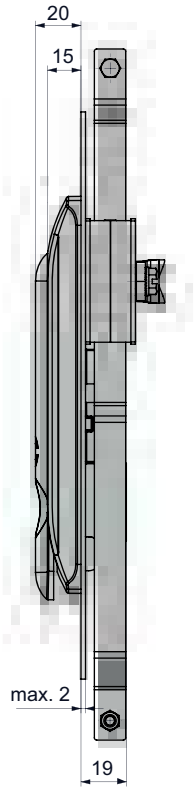

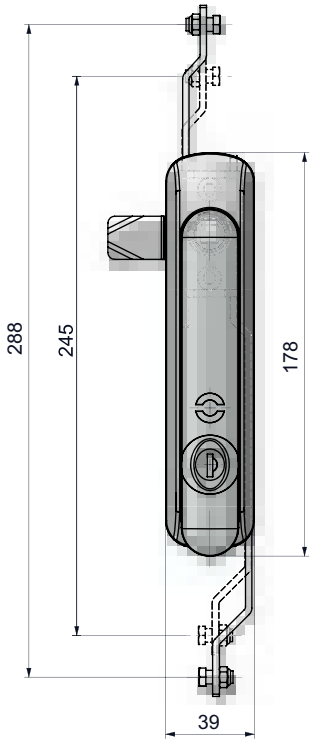



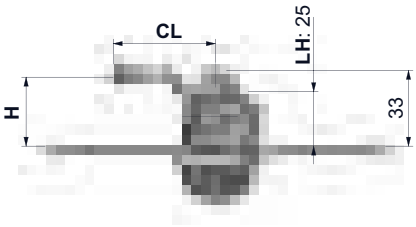



- Offers an economical solution

MATERIAL

BODY	Polyamide DIN-EN ISO 1043-1 PA6 GFR 30
MECHANISM:	Zamak DIN-EN 1774-ZnAl4Cu1
HANDLE:	Polyamide DIN-EN ISO 1043-1 PA6 GFR 30
GASKET:	Polyurethane

	CYLINDER TYPE	DD
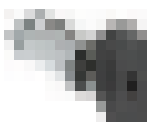	Keyed alike (Stainless steel dust cap)	03
	Keyed differ (Stainless steel dust cap)	32
	Master system	04
	Euro key (5333)	05
	CH751 (Stainless steel dust cap)	07

Group Code	Handle		Body		Cylinder	Cam
809	2	0	2	0	DD	CC

For cams please check pages: 170 - 171
For rods please check pages: 178 - 188

THREE-POINT LOCK – WING KNOB

103

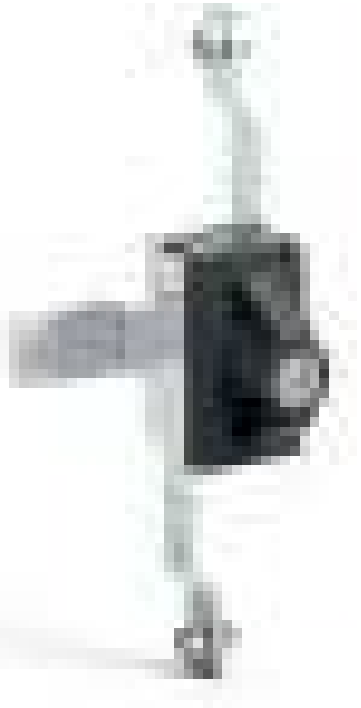

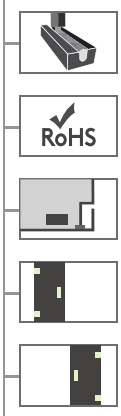

V: 2

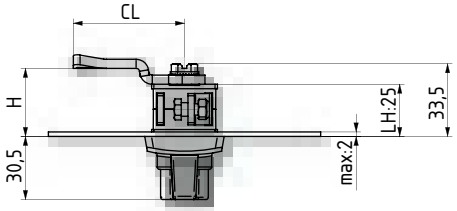

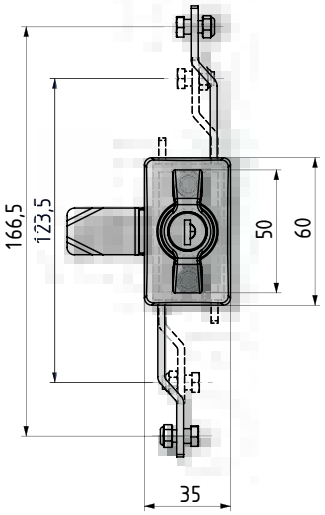



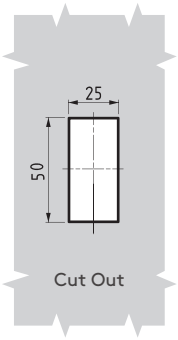

- Wing knob, T handle and L handle available
- Optional blind version
- Standard 25 mm x 50 mm cut outw

MATERIAL

BODY:	Zamak or PA6 GFR 30
HANDLE:	Zamak or PA6 GFR 30
MECHANISM:	Zamak DIN-EN 1774-ZnAl4Cu1
CAM:	Steel
GASKET:	Polyurethane

No Cylinder '00'

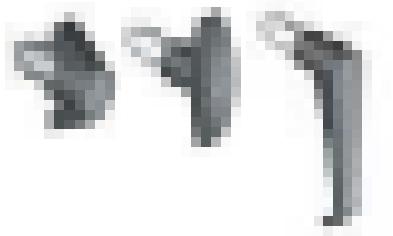

CYLINDER TYPE	DD
No Cylinder	00
Keyed alike (Stainless steel dust cap)	03
Keyed differ (Stainless steel dust cap)	32
Master system	04
Euro key (5333)	05
CH751 (Stainless steel dust cap)	07

MATERIAL	M	FINISH	F
Zamak	1	Chrome plated	1
		Black coated	2
Plastic	2	No finish	0

DOOR DIRECTION	
Right hand	001
Left hand	002

Group Code	Version	Handle		Body		Cylinder	Cam	Door Direction
103	V	M	F	M	F	DD	CC	

For cams please check pages: 170 - 171
For rods please check pages: 178 - 188

tel | + 90 212 721 44 44 fax | + 90 212 721 44 45

103 THREE-POINT LOCK – T HANDLE

V: 3

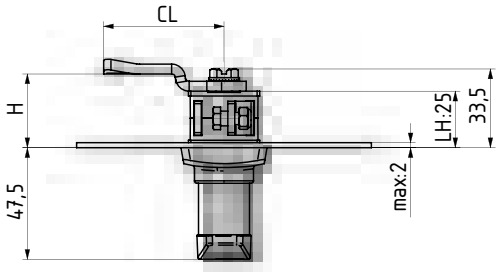

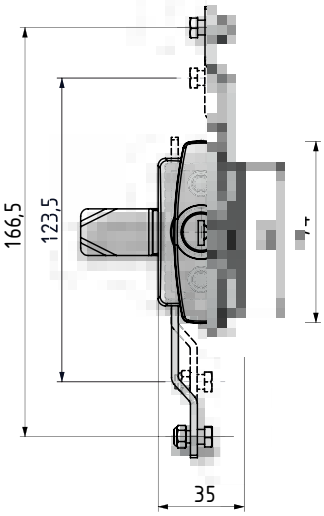

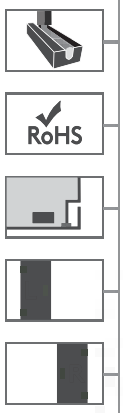



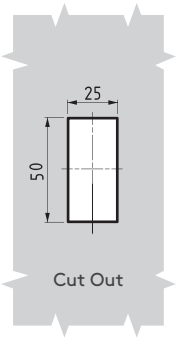

103 THREE-POINT LOCK – L HANDLE

V: 4

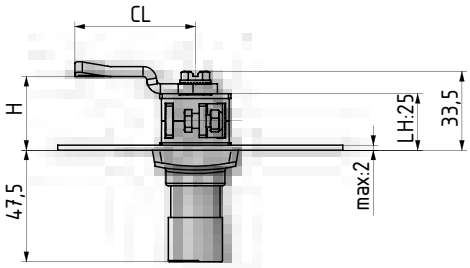

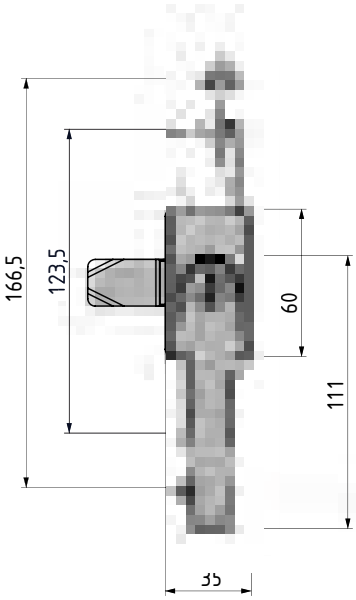

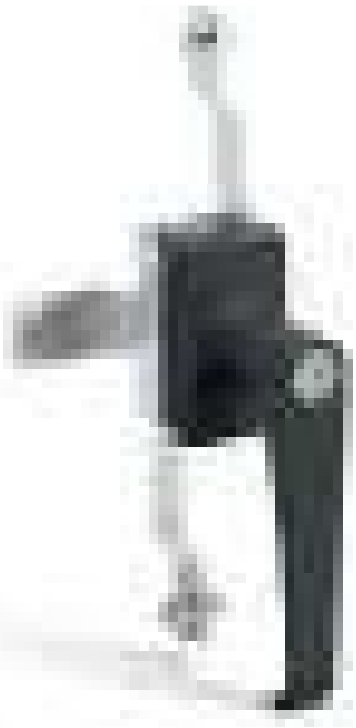

For cams please check pages: 170 - 171
For rods please check pages: 178 - 188

THREE-POINT LOCK – WING KNOB

203



IP 54

RoHS

V: 2

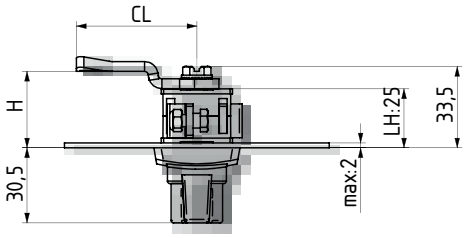

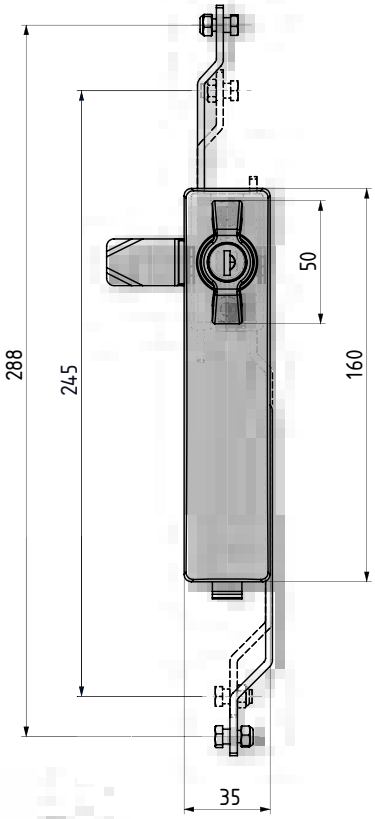



- Clip fixing for easy assembly
- Wing knob, T handle and L handle available with three point locking
- Optional blind version
- For doors with standard swinghandle cut out

MATERIAL

BODY	PA6 GFR 30
HANDLE:	Zamak or PA6 GFR 30
MECHANISM:	Zamak DIN-EN 1774-ZnAl4Cu1
CAM:	Steel
GASKET:	Polyurethane

No Cylinder '00'

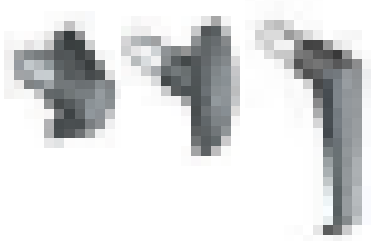

CYLINDER TYPE		DD
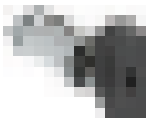	No Cylinder	00
	Keyed alike (Stainless steel dust cap)	03
	Keyed differ (Stainless steel dust cap)	32
	Master system	04
	Euro key (5333)	05
	CH751 (Stainless steel dust cap)	07

MATERIAL	M	FINISH	F
Zamak	1	Chrome plated	1
		Black coated	2
Plastic	2	No finish	0

DOOR DIRECTION	
Right hand	001
Left hand	002

Group Code	Version	Handle		Body		Cylinder	Cam	Door Direction
203	V	M	F	2	0	DD	CC	

tel | + 90 212 721 44 44 fax | + 90 212 721 44 45

203 THREE-POINT LOCK – T HANDLE

V: 3

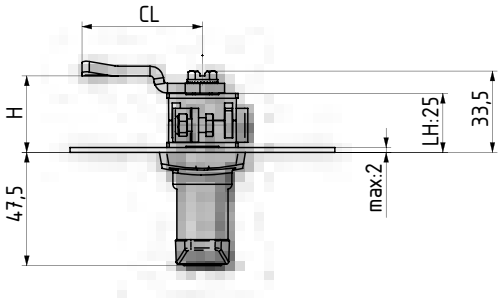

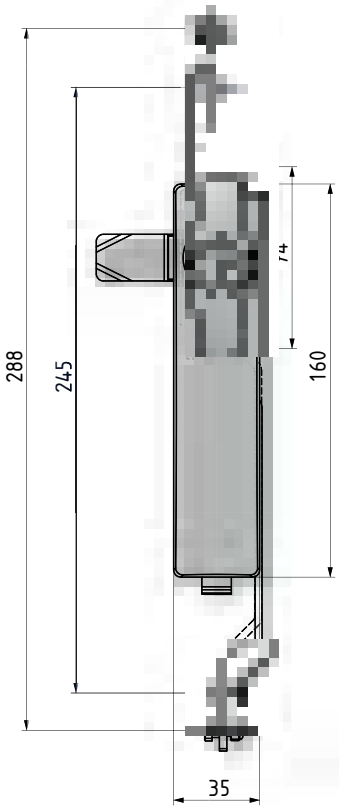

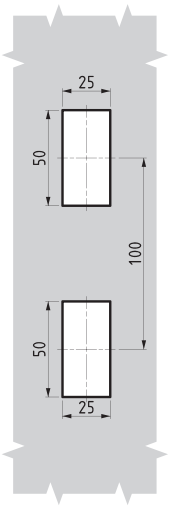

Cut Out



203 THREE POINT LOCK – L HANDLE

V:4

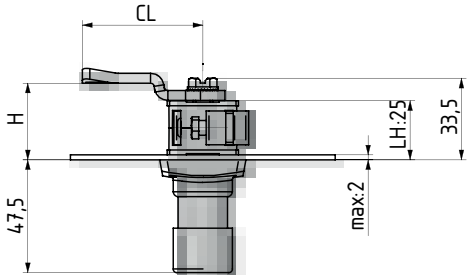

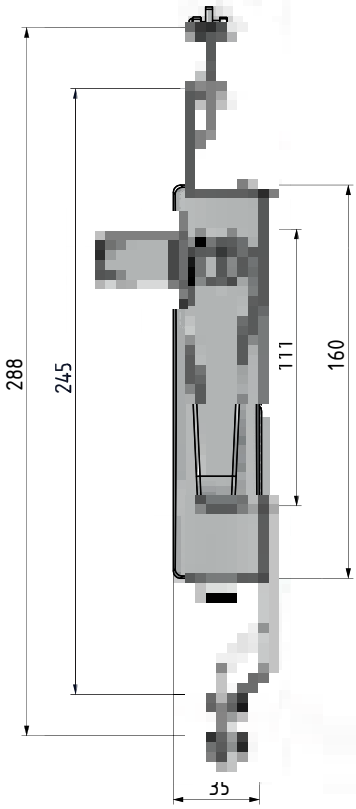



THREE-POINT LOCK

203



IP 54

RoHS

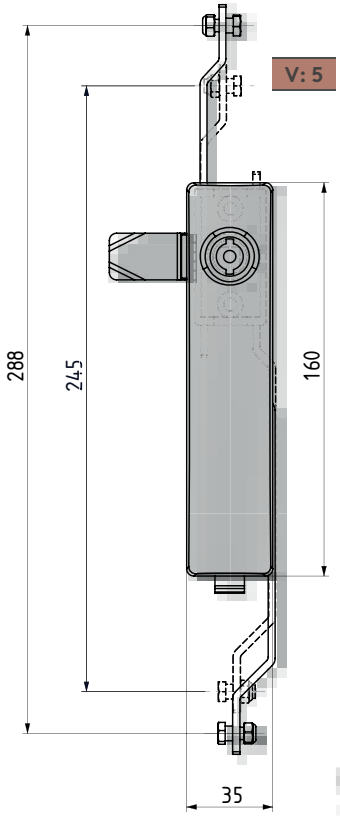

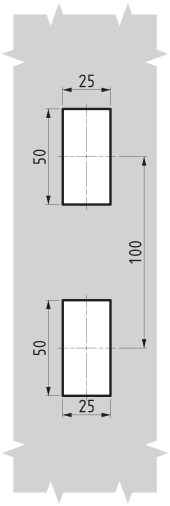

Cut Out

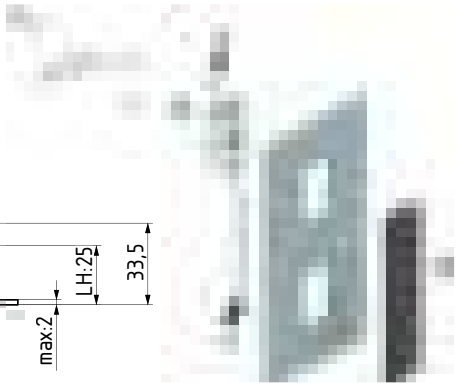

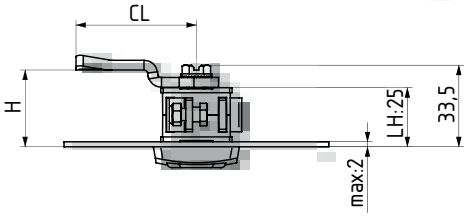

- Clip fixing for easy assembly
- Integral gear-box for three- point locking

MATERIAL

BODY	PA6 GFR 30
MECHANISM:	Zamak DIN-EN 1774-ZnAl4Cu1
CAM:	Steel
GASKET:	Polyurethane

DRIVERS		
5 mm Double bit	8 mm Square	9 mm Triangular
		
15	28	39

DOOR DIRECTION	
Right hand	001
Left hand	002

Group Code	Version	Driver	Cam	Door Direction
203	5	DD	CC	

For cams please check pages: 170 - 171
For rods please check pages: 178 - 188
For keys please check pages: 189 - 191

tel | + 90 212 721 44 44 fax | + 90 212 721 44 45

003 THREE-POINT LOCK

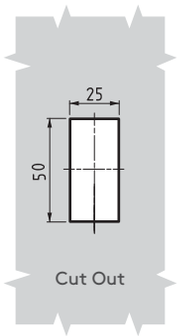

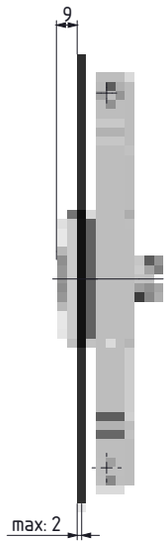

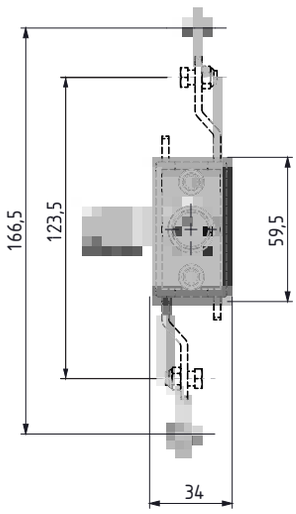

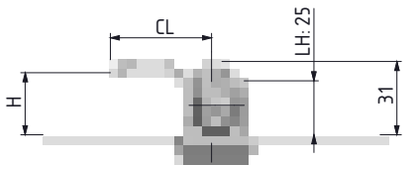

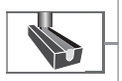



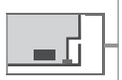





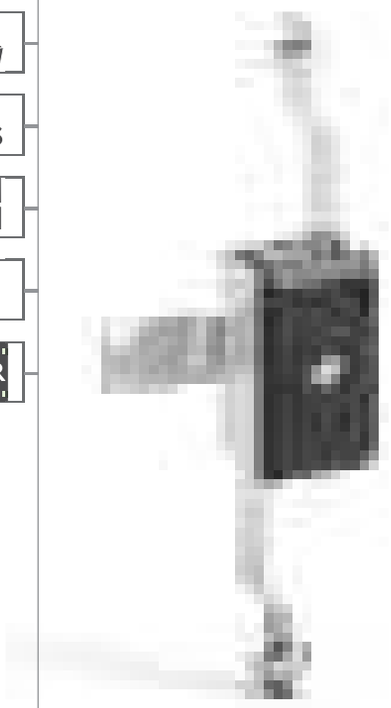

103 THREE-POINT LOCK

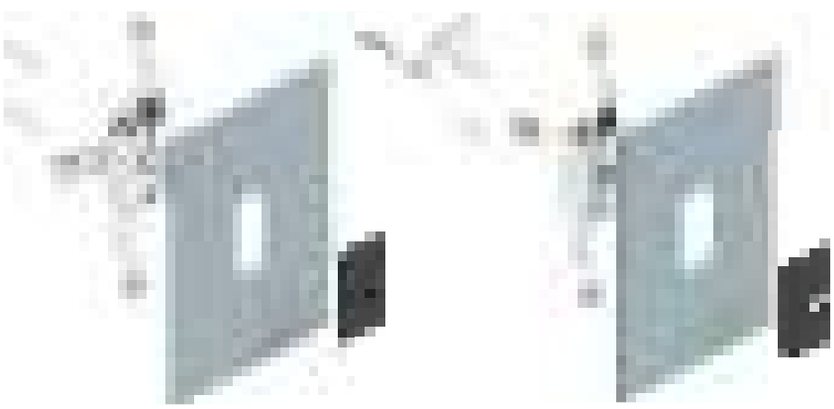

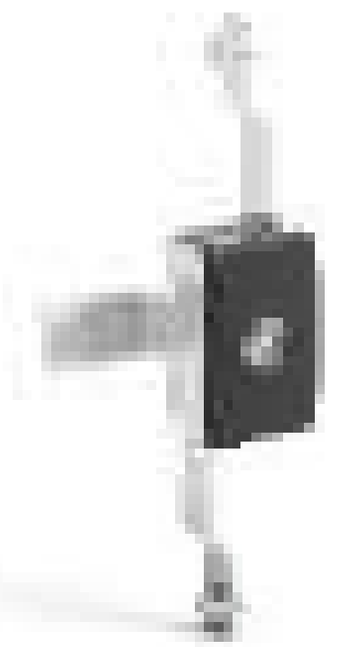

DRIVERS		
5 mm Double bit	8 mm Square	9 mm Triangular
15	28	39

DOOR DIRECTION	
Right hand	001
Left hand	002

Group Code	Driver	Cam	Door Direction
003	DD	CC	

Group Code	Version	Driver	Cam	Door Direction
103	5	DD	CC	

For cams please check pages: 170 - 171
For rods please check pages: 178 - 188
For keys please check pages: 189 - 191

ROD-LATCH SYSTEM

M : 1 Stepped bolt

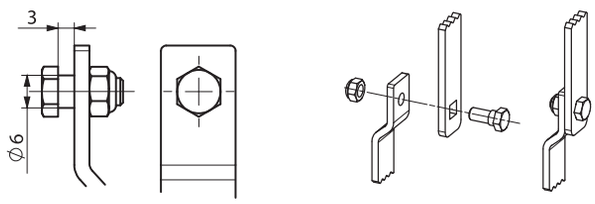

M : 2 With snap ring

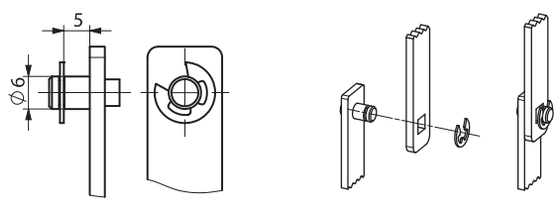

M : 3 Square riveted

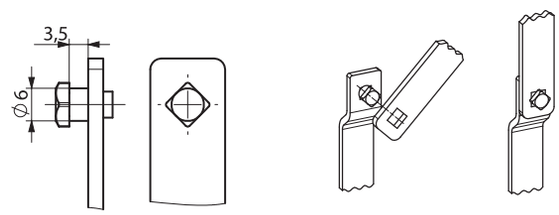

M : 4 'T'- tipped

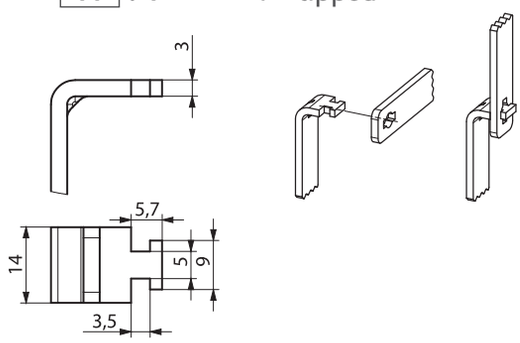

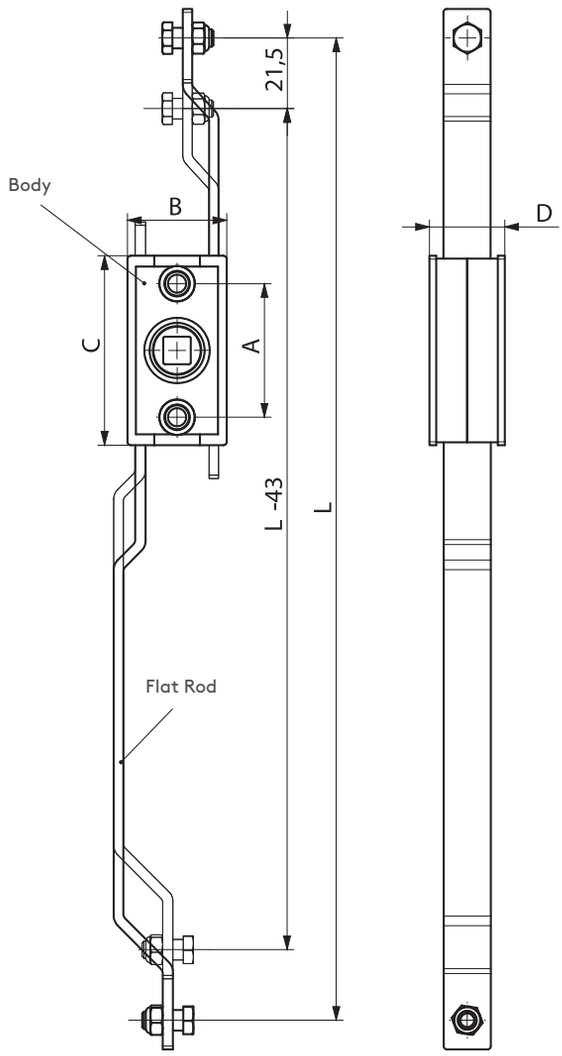

L mm
217
278
288
347
166
125

tel | + 90 212 721 44 44 fax | + 90 212 721 44 45



Group Code	Version	Length	Flat Rod Mounting
4001	V	L	M

V	MECHANISM		A	B	C	D
	Body	Flat rod				
1	Zamak	Steel	39	29	55	22
2	Plastic	Steel	39	29	55	22
3	Zamak (with Stopper)	Steel	39	29	55	22
4	Stainless steel	Stainless steel	39	29	55	22
5	Zamak (D: 19mm)	Steel	39	27	55	19
6	Zamak (A: 38 mm)	Steel	39	29	55	22

INTERNAL LOCKING SYSTEM 03030

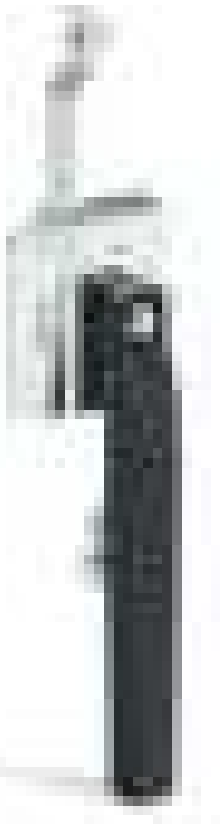

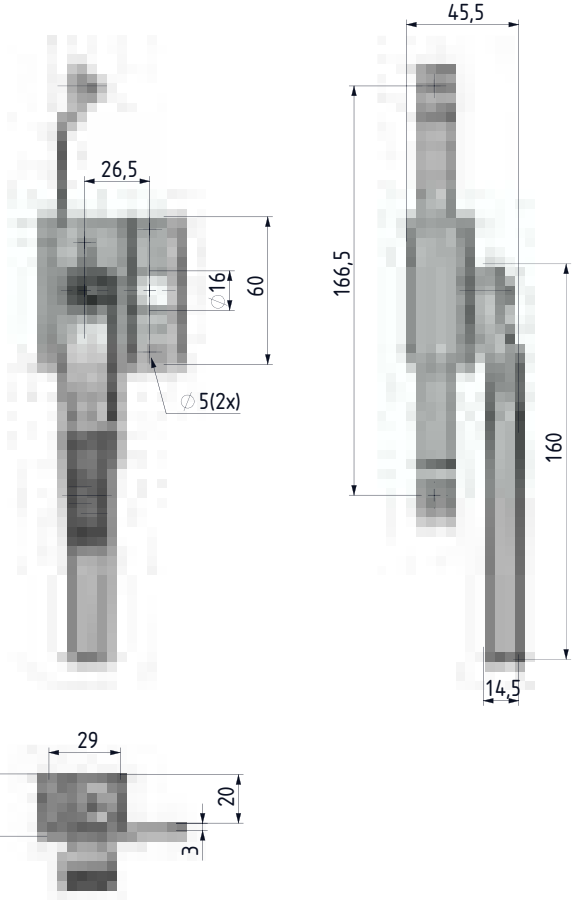

- For double-door cabinets to lock single door from inside

MATERIAL

HANDLE:	Zamak DIN-EN 1774-ZnAl4Cu1
MECHANISM:	Zamak DIN-EN 1774-ZnAl4Cu1

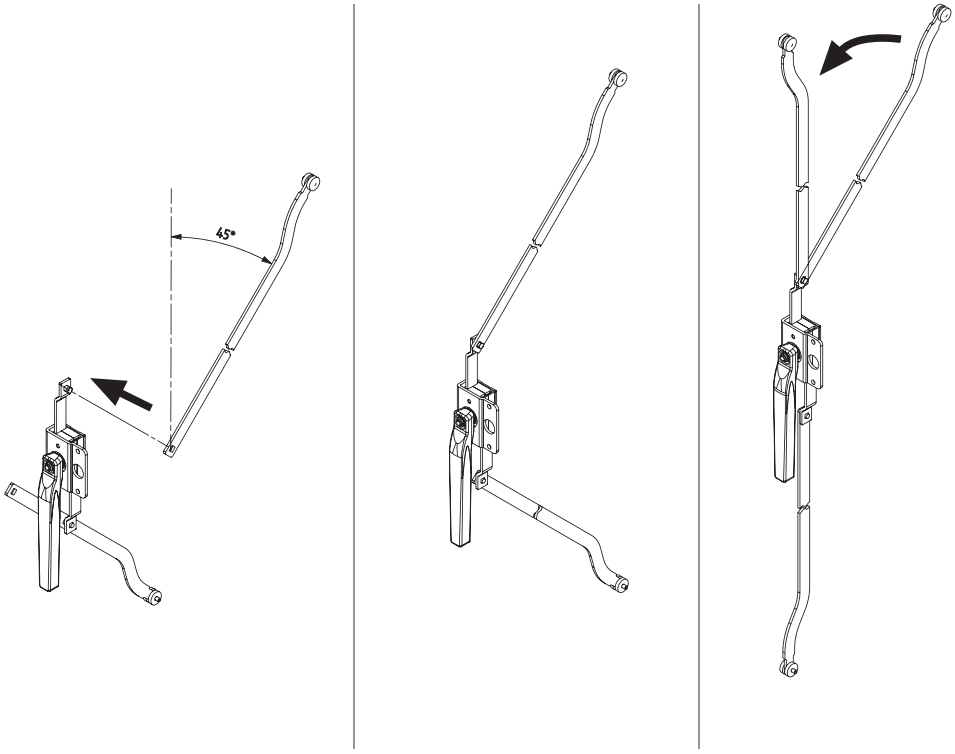

For cams please check pages: 170 - 171

For rods please check pages: 178 - 188

tel | + 90 212 721 44 44 fax | + 90 212 721 44 45

FAST FIND INDEX

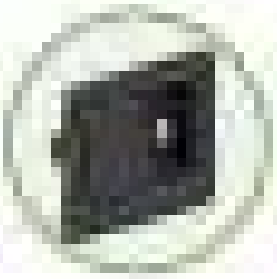
90-92

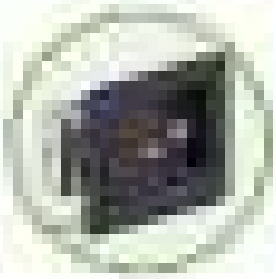
93

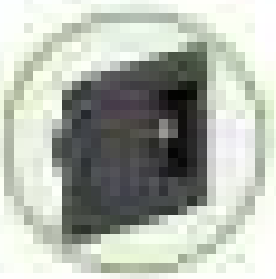
94

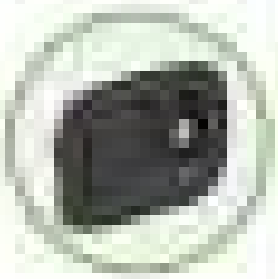
95

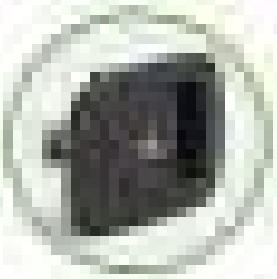
96

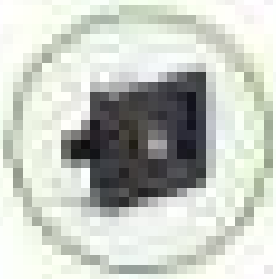
97


98

NEW


99


100-105

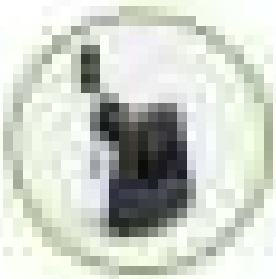
106

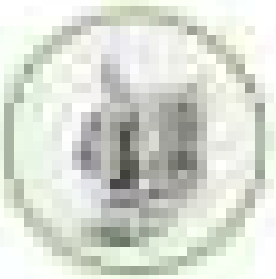
109


110

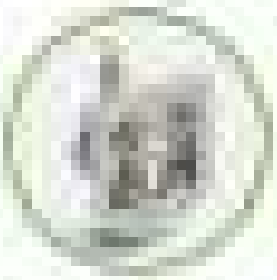
111

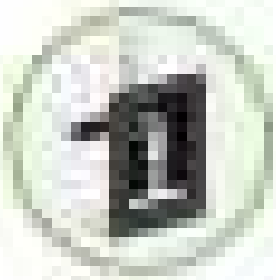
112-113

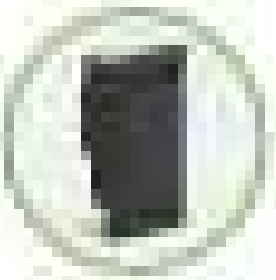
114


115



HEAVY-DUTY LOCKS

88-115

mesan
ESSENTRA COMPONENTS

email | info@mesanlocks.com web | www.mesanlocks.com

PUSH-TO-CLOSE LOCK — 016



RoHS

- **Stainless steel version: page 454**
- Slam-shut operation
- Brass cam
- Striking plate required
- Can open from inside by moving cam

MATERIAL

BODY:	Steel
HANDLE:	Steel
CAM:	Brass
SCREW:	Stainless steel
GASKET:	Polyurethane

FINISH
Black Coated

V: 1

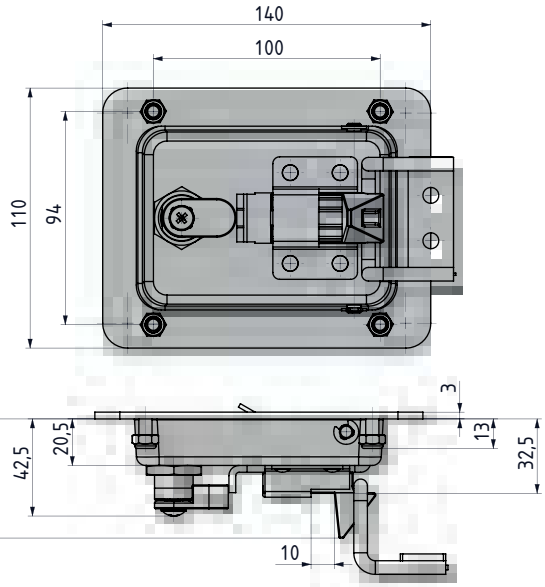

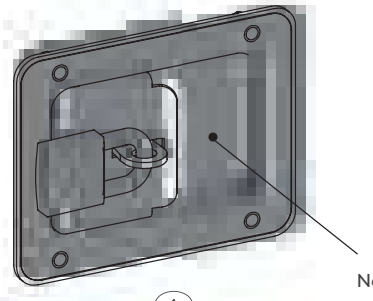

No cylinder

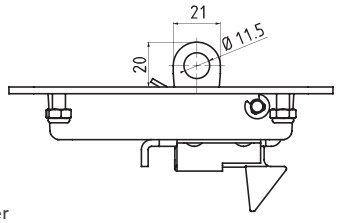

1
Padlock application

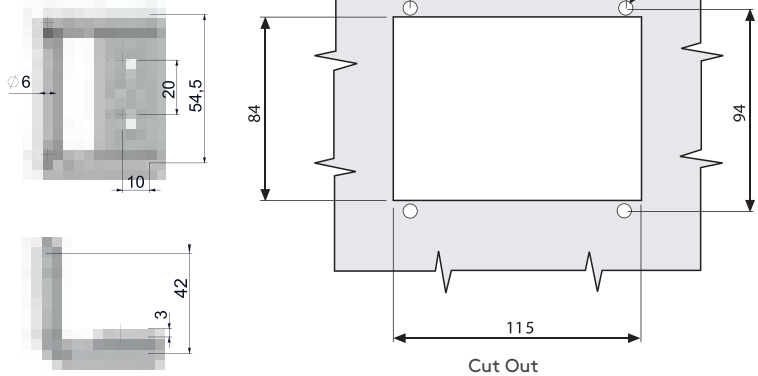

Cut Out

CAM STRIKING PLATE — 016 A71

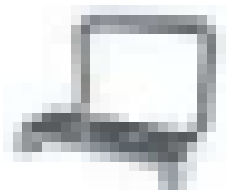

- Striking plate
- Custom sizes available

MATERIAL
Steel

FINISH
Zinc plated

SPECIFICATIONS	D D
No cylinder	00
Stainless steel dust cap (Keyed alike)	03
Stainless steel dust cap (Keyed differ)	32

MATERIAL	M
Steel	6

FINISH	F
Black Coated	2

Group Code	Material	Finish	Cylinder	Version	Padlock *
016	6	2	DD	V	

*: add **"1"** for padlock application

tel | + 90 212 721 44 44 fax | + 90 212 721 44 45

016 PUSH-TO-CLOSE LOCK

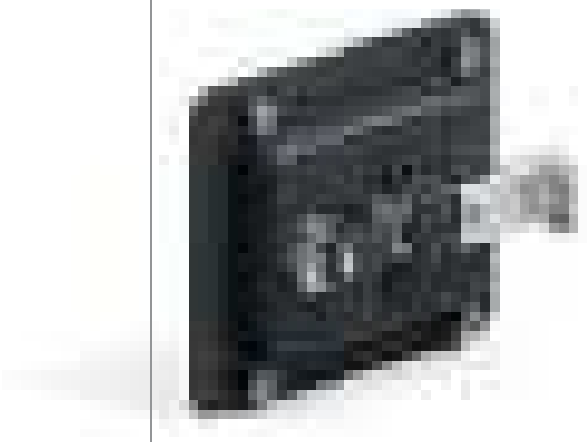

- Two types of die-cast zinc cams
- No locking device needed
- Can open from inside by moving cam

MATERIAL

BODY:	Steel
HANDLE:	Steel
CAM:	Zamak DIN-EN 1774-ZnAl4Cu1
SEAL:	Polyurethane

FINISH
Black coated

V: 2

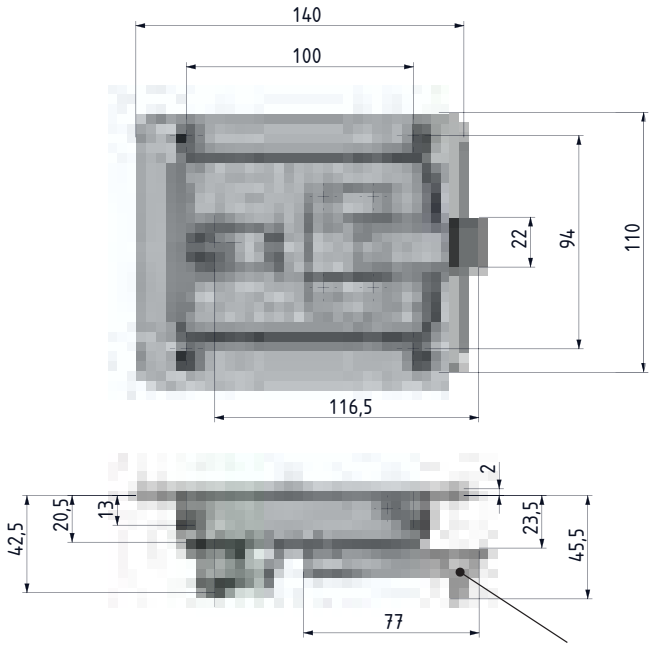

V: 3

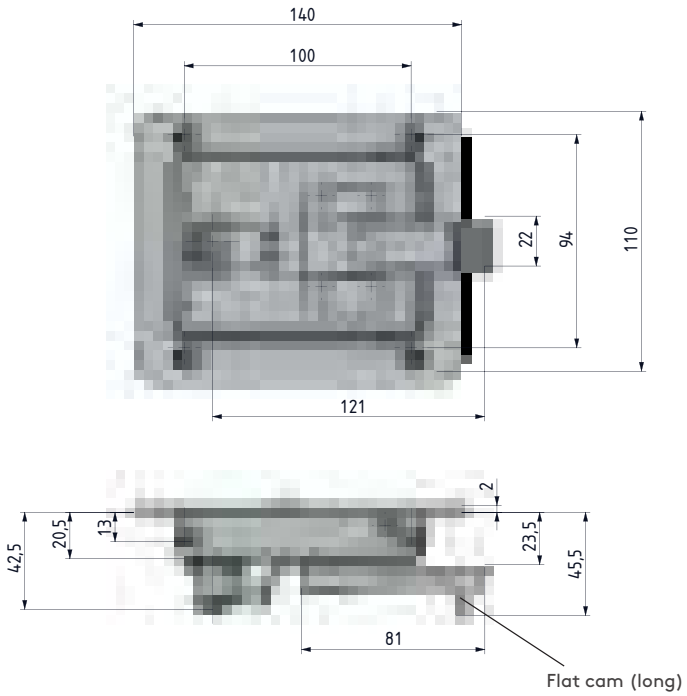

PUSH-TO-CLOSE LOCK — 016

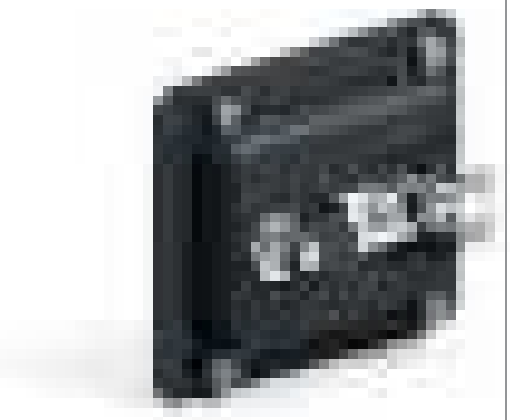

- Slam-shut operation with steel cam
- Can open from inside by moving cam

MATERIAL

BODY:	Steel
HANDLE:	Steel
CAM:	Steel
SCREW:	Stainless steel
GASKET:	Polyurethane

FINISH
Black Coated

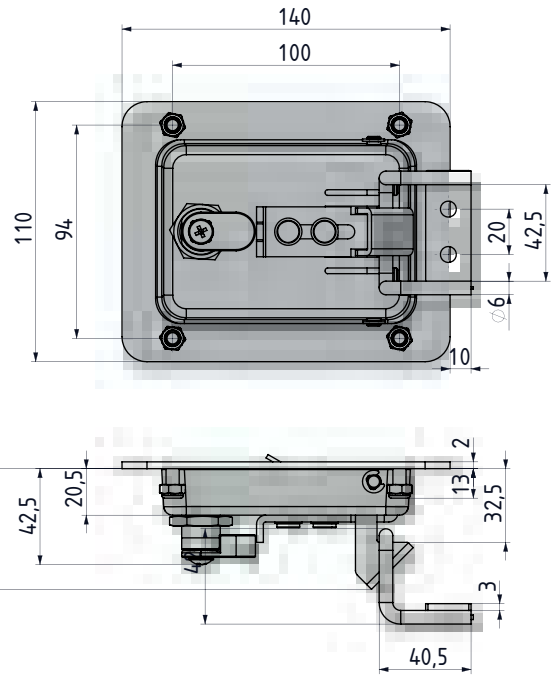

CAM STRIKING PLATE — 016 A71

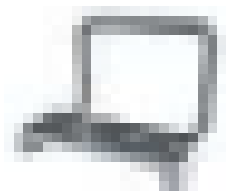

- Striking plate
- Custom sizes available

MATERIAL
Steel

FINISH
Zinc plated

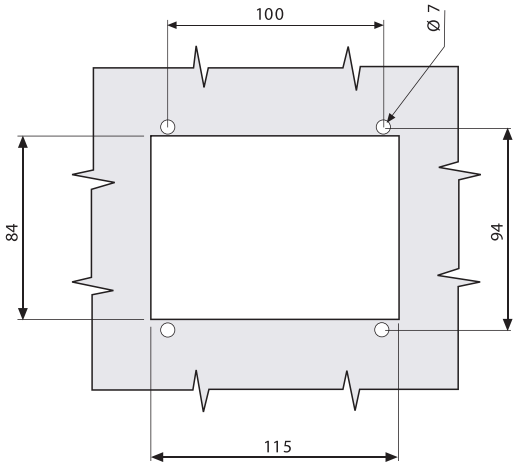

Cut Out

SPECIFICATIONS	D D
No cylinder	00
Stainless steel dust cap (Keyed alike)	03
Stainless steel dust cap (Keyed differ)	32

MATERIAL	M
Steel	6

FINISH	F
Black Coated	2

Group Code	Material	Finish	Cylinder	Version
016	6	2	DD	4

tel | + 90 212 721 44 44 fax | + 90 212 721 44 45

016 PUSH-TO-CLOSE LOCK

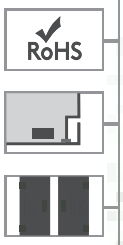

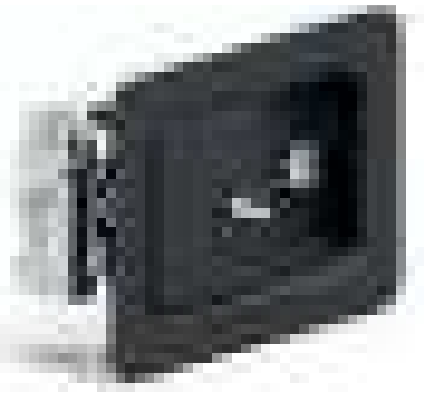

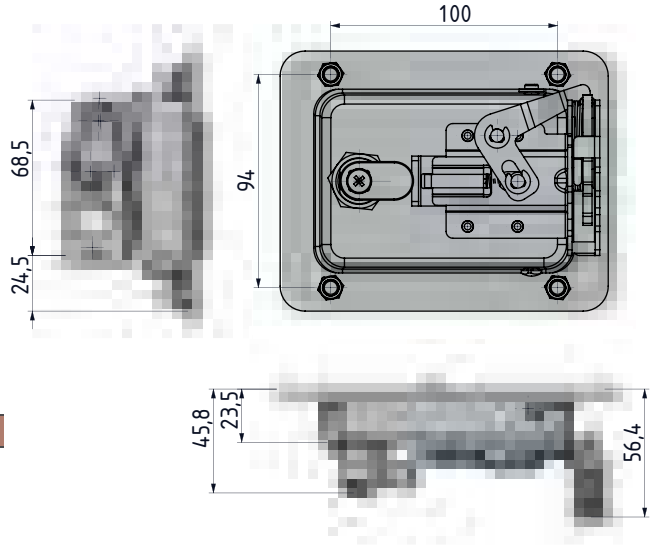

V: 5

- Padlatch with integrated Rotary Latch
- Slam-shut operation
- Striker bolt is required
- Can open from inside by moving cable

MATERIAL

BODY:	Steel
HANDLE:	Steel
CAM:	Zamak DIN-EN 1774-ZnAl4Cu1
SEAL:	Polyurethane
ROTARY LATCH:	Steel

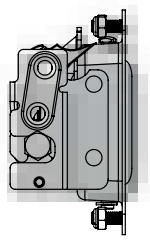

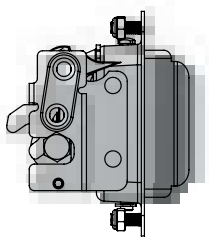

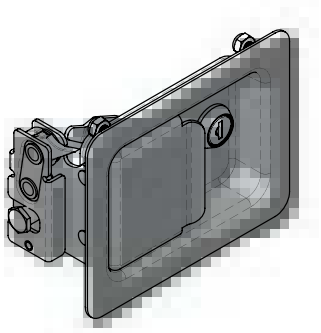

Locked position

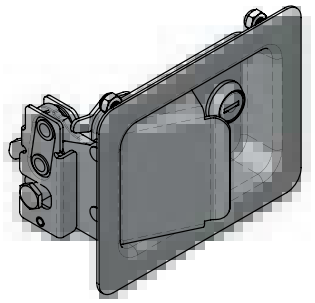

Unlock position

SB.1 STRIKER BOLT (MINI)

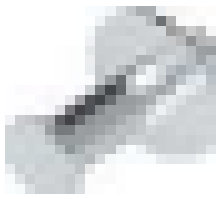

MATERIAL
BODY: Steel

FINISH
Zinc Plated

SPECIFICATIONS	D D
No cylinder	00
Stainless steel dust cap (Keyed alike)	03
Stainless steel dust cap (Keyed differ)	32

MATERIAL	M
Steel	6

FINISH	F
Black Coated	2

Group Code	Material	Finish	Cylinder	Version	Padlock *
016	6	2	DD	5	

*: add **"1"** for padlock application

For Cables & Cable Accessories page: 158- 159

PUSH-TO-CLOSE LOCK — 016



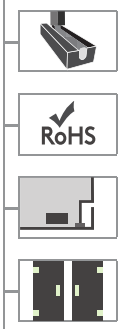

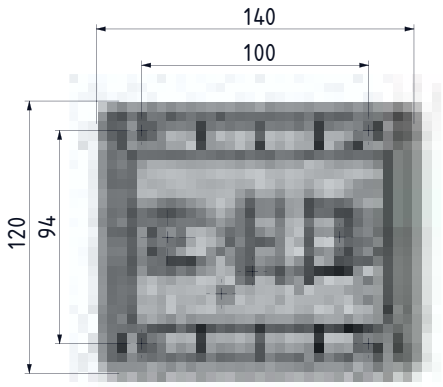

- Slam-shut operation
- Brass cam
- Striking plate required
- Can open from inside by moving cam

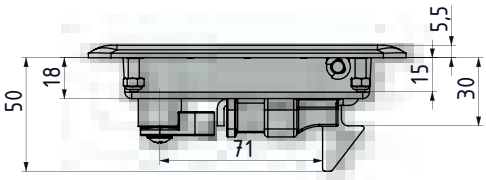

MATERIAL

BODY: Polyamid DIN-EN ISO 1043-1 PA6 GFR 30

CAM: Brass or Delrin

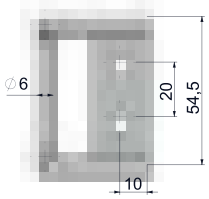

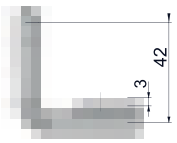

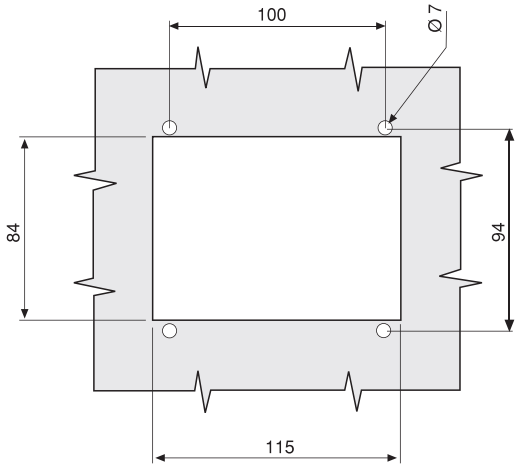

Cut Out

CAM STRIKING PLATE — 016 A71

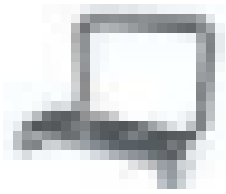

- Striking plate
- Custom sizes available

MATERIAL
Steel

FINISH
Zinc plated

CYLINDER TYPE	D D
Stainless steel dust cap (Keyed alike)	03
Stainless steel dust cap (Keyed differ)	32

CAM	C C
Brass	01
Plastic	02

Group Code	Material	Finish	Cylinder	Cam
016	2	0	DD	CC

tel | + 90 212 721 44 44 fax | + 90 212 721 44 45

216 PUSH-TO-CLOSE LOCK

Plastic material

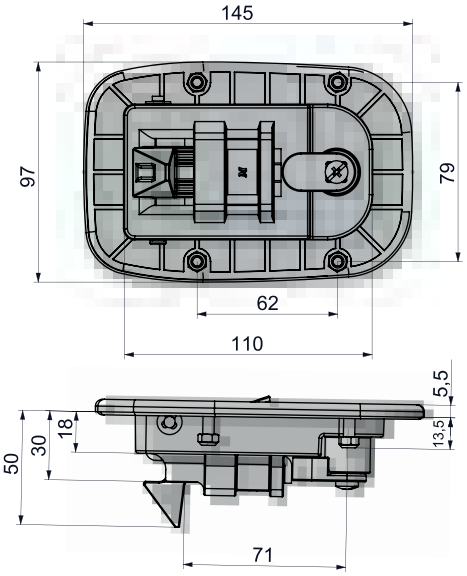

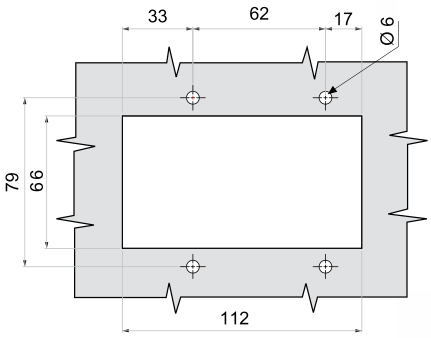

Cut Out

NEW

Metal material

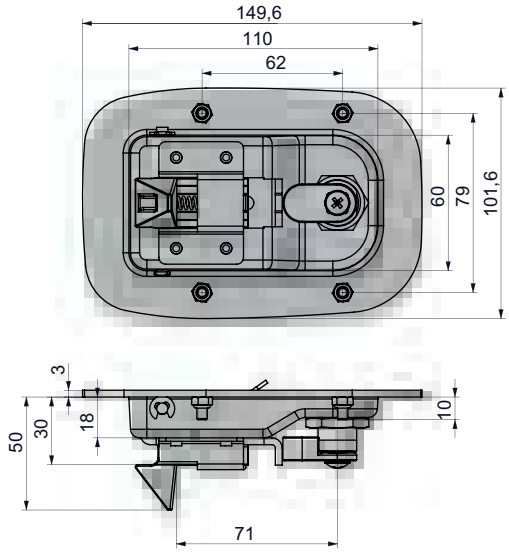

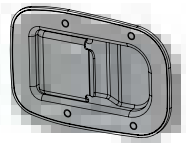

No cylinder
(for only metal material)

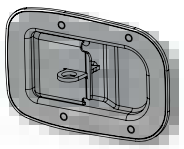

Padlock application
(for only metal material)





- Slam-shut operation
- Brass cam
- Striking plate required
- Can open from inside by moving cam

MATERIAL

BODY: Steel or Polyamide DIN-EN ISO 1043-1 PA6 GFR 30

CAM: Brass or Delrin

MATERIAL	M	FINISH	F
Steel	6	Black coated	2
Plastic	2	No finish	0

CYLINDER TYPE	D D
No cylinder	00
Stainless steel dust cap (Keyed alike)	03
Stainless steel dust cap (Keyed differ)	32

CAM	C C
Brass	01
Plastic	02

Group Code	Material	Finish	Cylinder	Cam	Asma Kilit *
216	M	F	DD	CC	

*: add **"1"** for padlock application

016 A71 CAM STRIKING PLATE

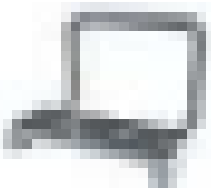

- Striking plate
- Custom sizes available

MATERIAL
Steel

FINISH
Zinc plated

PUSH-TO-CLOSE LOCK 316

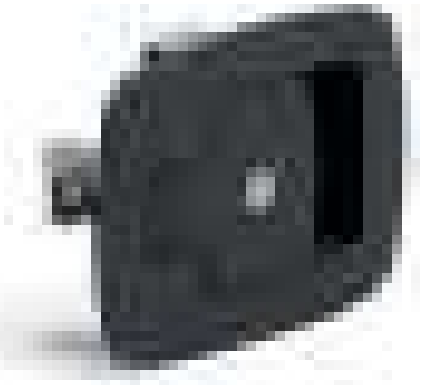

IP 54

RoHS

- Slam shut operation. Steel cam.
- Striking plate is needed
- Lock can be opened from inside by moving cam. .

MATERIAL

BODY: Polyamid DIN-EN ISO 1043-1 PA6 GFR 30

CAM: Steel

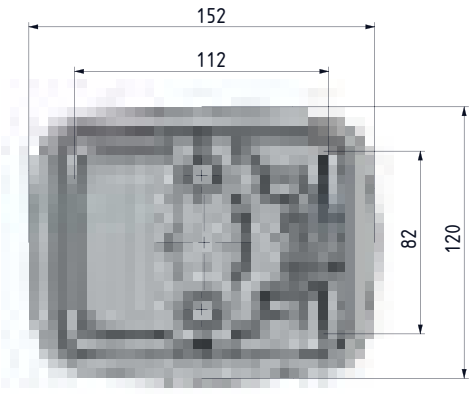

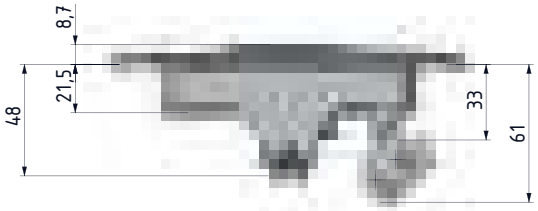



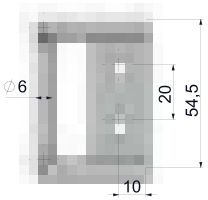

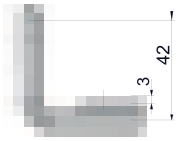

CAM STRIKING PLATE 016 A71

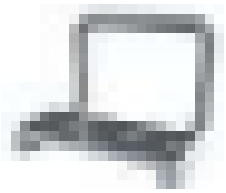

- Striking plate
- Custom sizes available

MATERIAL

Steel

FINISH

Zinc plated

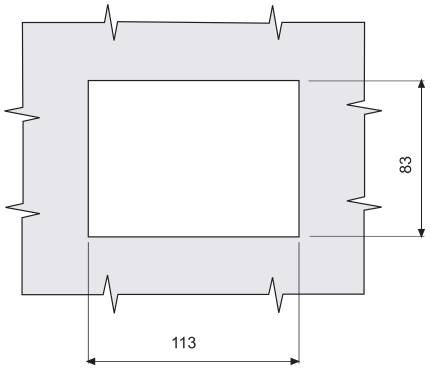

Cut Out

SPECIFICATIONS	D D
Stainless steel dust cap (Keyed alike)	03

Group Code	Material	Finish	Cylinder	Cam
316	2	0	03	01

tel | + 90 212 721 44 44 fax | + 90 212 721 44 45

116 MINI PUSH-TO-CLOSE LOCK

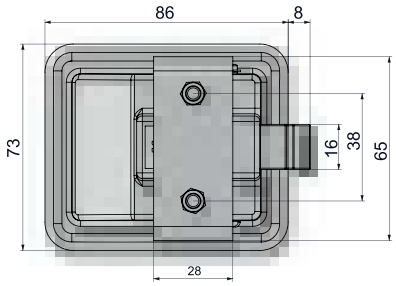

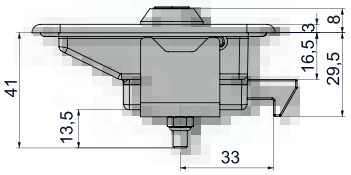



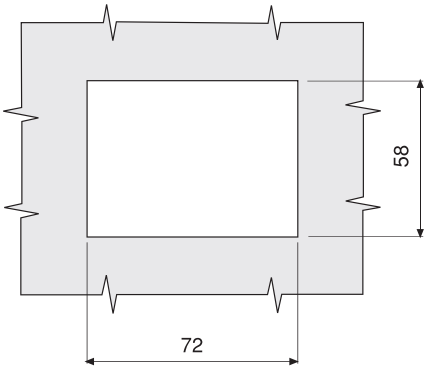

Cut Out

IP 54

RoHS

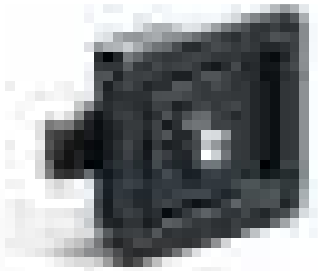

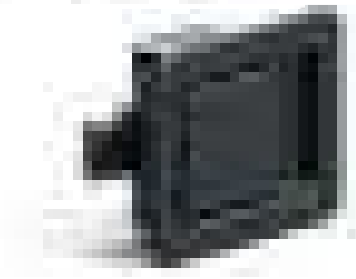

- Delrin cams
- No locking device needed
- Can open from inside by moving cam

MATERIAL

BODY:	Polyamid DIN-EN ISO 1043-1 PA6 GFR 30
HANDLE:	Zamak DIN-EN 1774-ZnAl4Cu1
CAM:	Delrin

MOUNTING BRACKET: Steel

SPECIFICATIONS	D D
No cylinder	00
Keyed alike	01

Group Code	Cylinder
116	DD

T HANDLE HEAVY-DUTY LOCK — 214



IP 65

RoHS

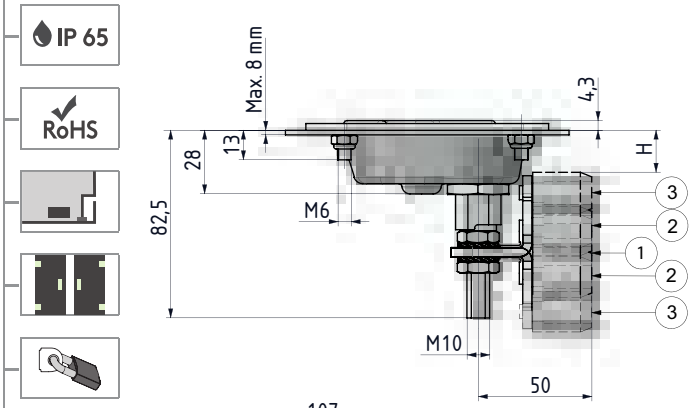

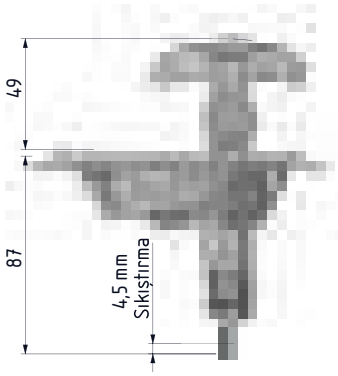

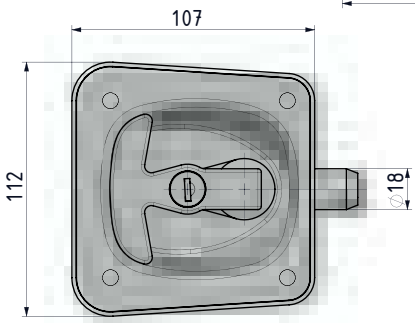

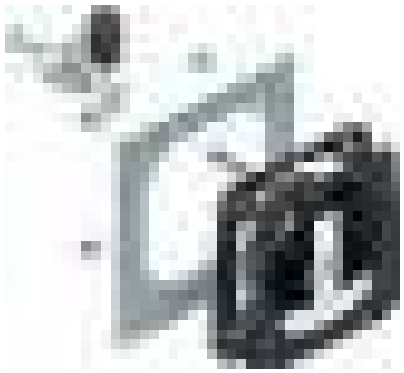

- Advanced sealing with compression
- Adjustable grip is possible
- Easy fixing with roller cam
- with/without padlock options

MATERIAL

BODY:	Steel
HANDLE:	Zamak DIN-EN 1774-ZnAl4Cu1
CAM:	Steel
SCREW:	Stainless steel
SEAL:	Polyurethane

FINISH

BODY: Black coated
HANDLE: Chrome or black coated

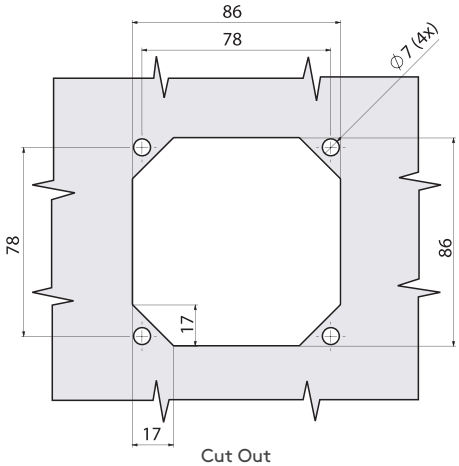

Cut Out

CAM	Stock Code	CC	Position	H: GRIP min	H: GRIP max
1	214C01	01	Up	35	54
			Down	57	72
2	214C02	02	Up	35	50
			Down	63	78
3	214C03	03	Up	20	35
			Down	75	90



Padlock application

SPECIFICATIONS	D D
No cylinder	00
Stainless steel dust cap (Keyed alike)	03
Stainless steel dust cap (Keyed differ)	32
Euro key (5333)	05
CH751 (Stainless steel dust cap)	07

FINISH	F
Chrome plated	1
Black coated	2

Group Code	Handle		Cylinder	Cam	Padlock*
214	1	F	DD	CC	

*: add **"1"** for padlock application

tel | + 90 212 721 44 44 fax | + 90 212 721 44 45

214 T HANDLE HEAVY-DUTY LOCK

NEW

IP 65

RoHS

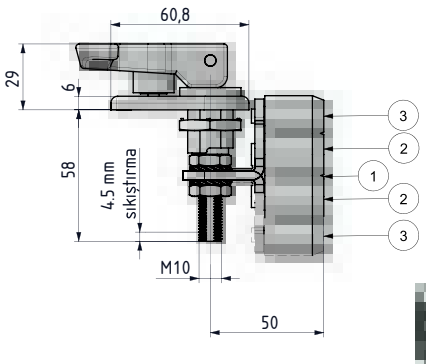

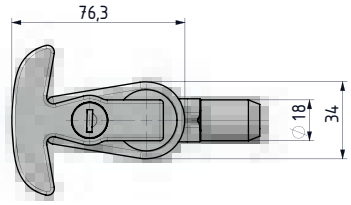



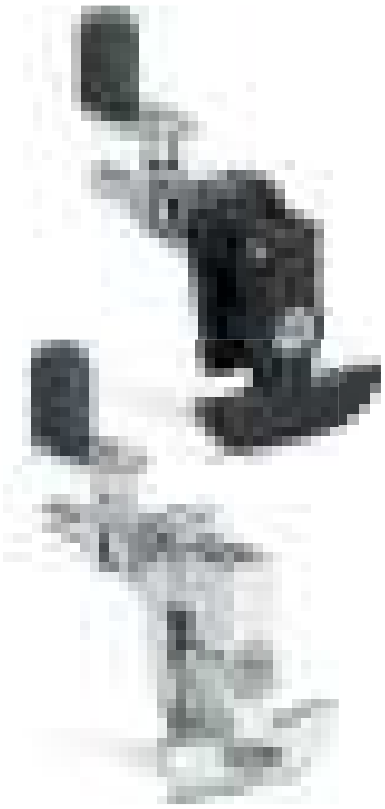

- Advanced sealing with compression
- Adjustable grip is possible
- Easy fixing with roller cam
- with/without padlock options

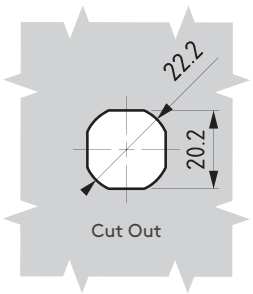

CAM	Stock Code	CC	Position	H: GRIP min	H: GRIP max
1	214C01	01	Up	20	35
			Down	72	87
2	214C02	02	Up	35	50
			Down	57	72
3	214C03	03	Up	38,5	54
			Down	54	69

MATERIAL

HOUSING:	Zamak DIN-EN 1774-ZnAl4Cu1
HANDLE:	Zamak DIN-EN 1774-ZnAl4Cu1
CAM:	Steel
SEAL:	Polyurethane

FINISH

BODY: Black coated

HANDLE: Chrome or black coated

SPECIFICATIONS	D D
No cylinder	00
Stainless steel dust cap (Keyed alike)	03
Stainless steel dust cap (Keyed differ)	32
Euro key (5333)	05
CH751 (Stainless steel dust cap)	07

FINISH	F
Chrome plated	1
Black coated	2

Group Code	Version	Handle		Housing		Cylinder	Cam	Padlock*
214	2	1	F	1	F	DD	CC	

*: add **"1"** for padlock application

014

VERSIONS

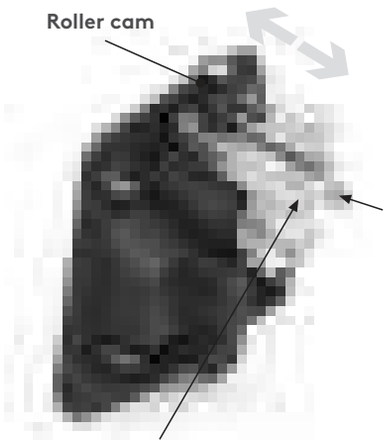

V: 1 **V: 6**

Adjustable roller cam

Grip adjustment system

Grip adjusted by rotating the main screw between
10 - 60 mm
40 - 80 mm

Set screw

To adjust the grip, first loosen the set screw. Then screw again for fixing

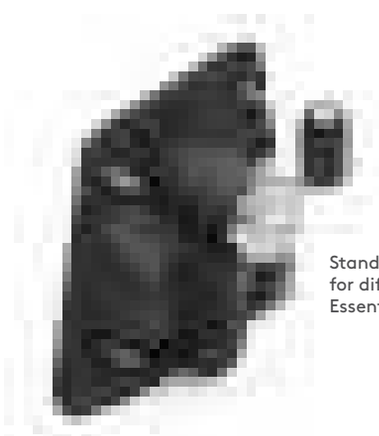

V: 2

Fixed cam

Standard Grip **(H)** is **60 mm**;
for different grip ranges contact
Essentra Components

V: 3

Espagnolette cam



two-point locking

V: 4

Espagnolette cam and adjustable roller cam

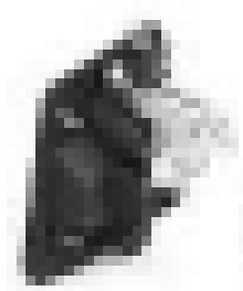

three-point locking

V: 5

Espagnolette cam and fixed cam

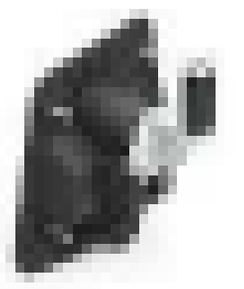

three-point locking

GENERAL FEATURES

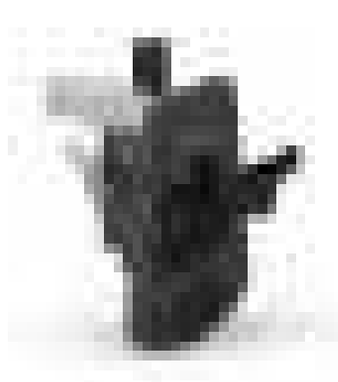

Ergonomic T handle

Black coated or
chrome plated

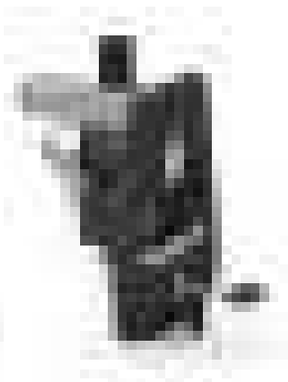

Cylinder locking system

Stainless steel dust
cap (Keyed alike or
Keyed differ)

Padlockable

Max. hasp dia 9 mm

Stud or hole option

M5 stud or rivet

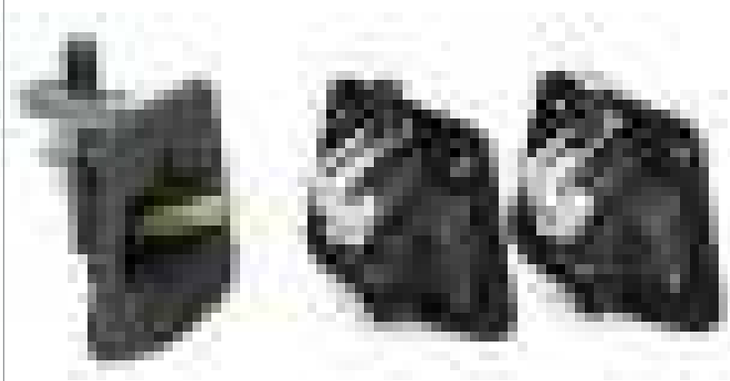

Cut out

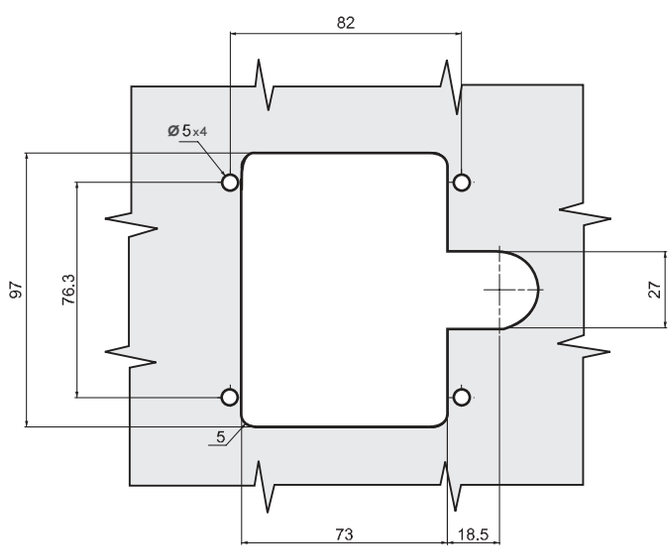

tel | + 90 212 721 44 44 fax | + 90 212 721 44 45

014 T HANDLE HEAVY-DUTY LOCK

Adjustable roller cam

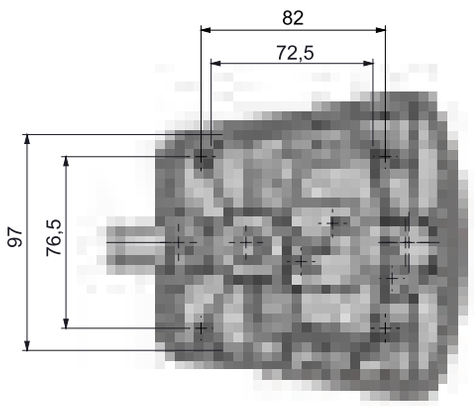

IP 65 | RoHS | L I R

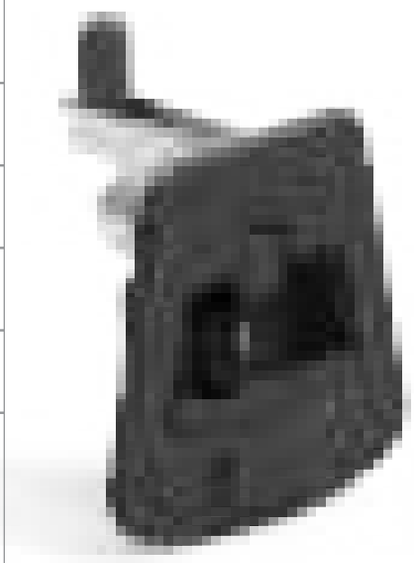

- Single-point locking
- 10 - 60 or 40 - 80 mm grip range
- Easy fixing with roller cam
- Provides sealing with compression property
- Option to use with or without padlock
- Use rivets or bolts for fixing
- Can be supplied without cylinder

MATERIAL

BODY: Polyamid DIN-EN ISO 1043-1PA6 GFR 30

HANDLE: Zamak DIN-EN 1774-ZnAl4Cu1

FINISH

HANDLE: Chrome or black coated

V:1

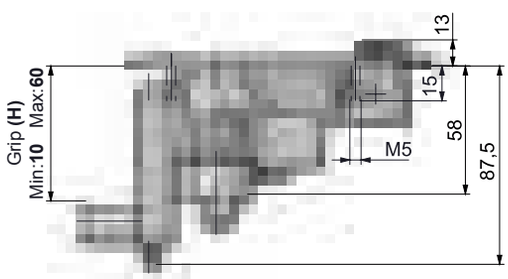

NEW

V:6

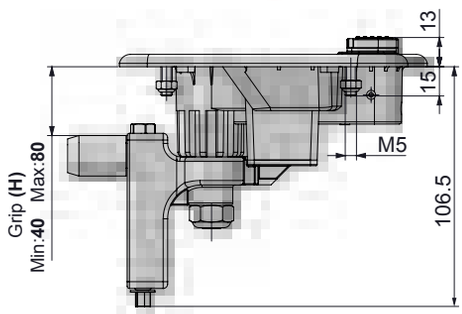

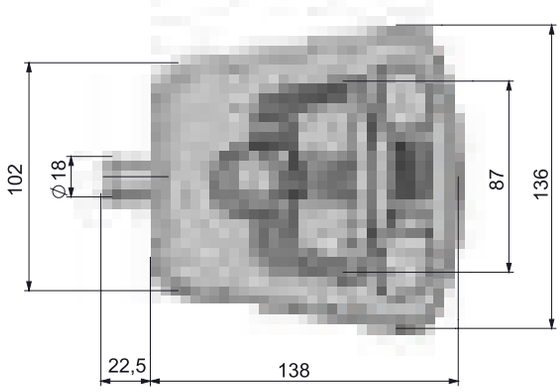

SPECIFICATIONS	D D
Stainless steel dust cap (Keyed alike)	03
Stainless steel dust cap (Keyed differ)	32
CH751 (Stainless steel dust cap)	07

FINISH	F
Chrome Plated	1
Black Coated	2

OPTION	O
Hole	0
Stud	1

Group Code	Version	Handle	Cylinder	Option
014	V	1 F	DD	

T HANDLE HEAVY-DUTY LOCK — 014

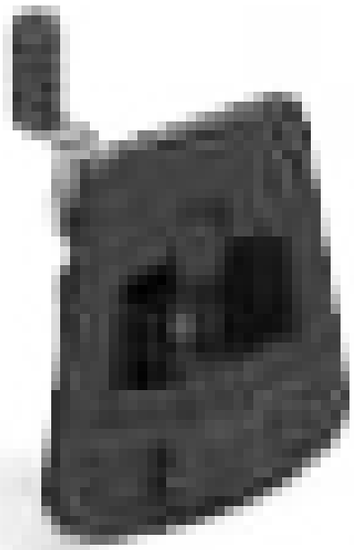

IP 65

RoHS

L R

- Fixed grip
- Single-point locking
- Easy fixing with roller cam
- Provides sealing with compression property
- Option to use with or without padlock
- Use rivets or bolts for fixing
- Can be supplied without cylinder

MATERIAL

BODY: Polyamid DIN-EN ISO 1043-1 PA6 GFR 30

HANDLE: Zamak DIN-EN 1774-ZnAl4Cu1

FINISH

HANDLE: Chrome or black coated

V: 2

Fixed cam

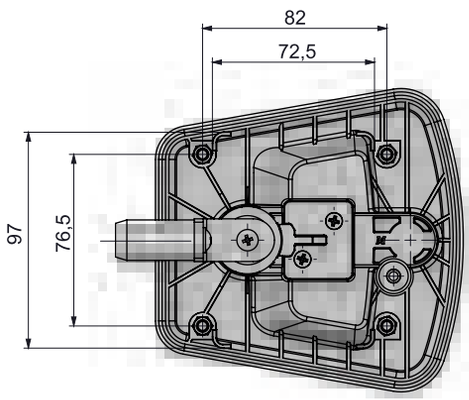

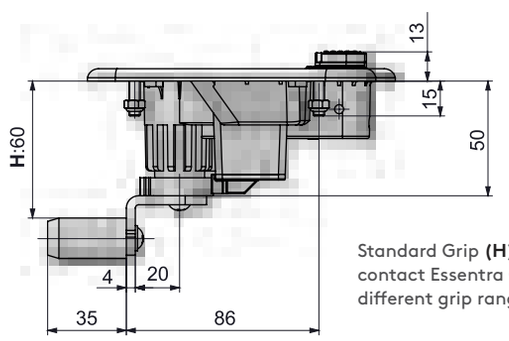

Standard Grip **(H)** is **60 mm**; contact Essentra Components for different grip ranges

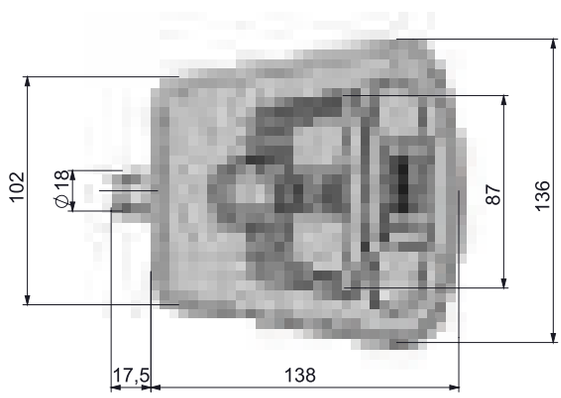

SPECIFICATIONS	D D
Stainless steel dust cap (Keyed alike)	03
Stainless steel dust cap (Keyed differ)	32
CH751 (Stainless steel dust cap)	07

FINISH	F
Chrome Plated	1
Black Coated	2

OPTION	O
Hole	0
Stud	1

Group Code	Version	Handle		Cylinder	Grip	Option
014	2	1	F	DD	60	

tel | + 90 212 721 44 44 fax | + 90 212 721 44 45

014 T HANDLE HEAVY-DUTY LOCK

V: 3

Espagnolette cam

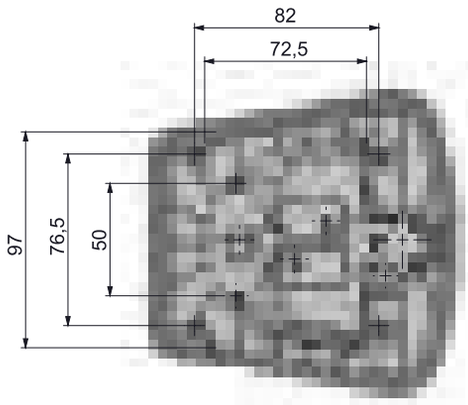

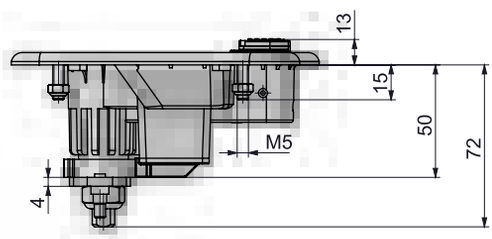

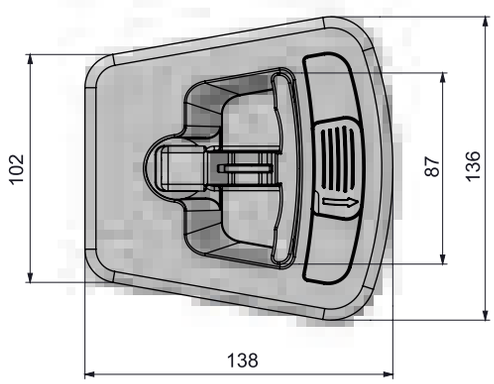

IP 65

RoHS

L R





- Two-point locking
- Option to use with or without padlock
- Use rivets or bolts for fixing
- Can be supplied without cylinder

MATERIAL

BODY: Polyamid DIN-EN ISO 1043-1PA6 GFR 30

HANDLE: Zamak DIN-EN 1774-ZnAl4Cu1

FINISH

HANDLE: Chrome or black coated

SPECIFICATIONS	D D
Stainless steel dust cap (Keyed alike)	03
Stainless steel dust cap (Keyed differ)	32
CH751 (Stainless steel dust cap)	07

FINISH	F
Chrome Plated	1
Black Coated	2

OPTION	O
Hole	0
Stud	1

Group Code	Version	Handle		Cylinder	Option
014	3	1	F	DD	

T HANDLE HEAVY-DUTY LOCK — 014

IP 65

RoHS

L R



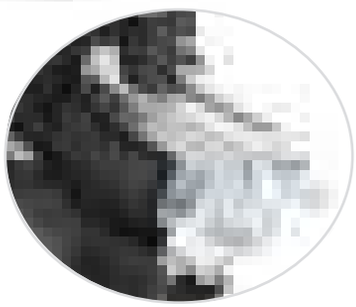

V:4

Espagnolette cam and adjustable roller cam

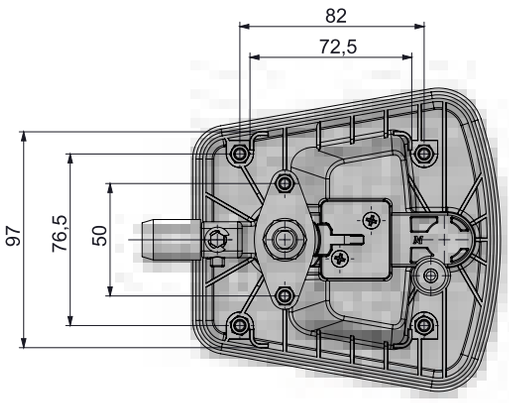

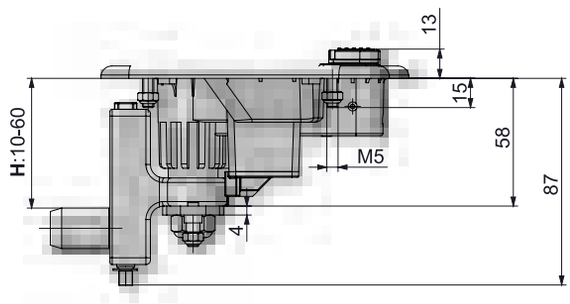

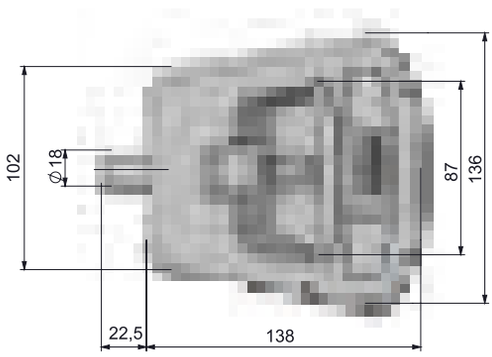

- Three-point locking
- 10 - 60 mm grip range
- Easy fixing with roller cam
- Provides sealing with compression property
- Option to use with or without padlock
- Use rivets or bolts for fixing
- Can be supplied without cylinder

MATERIAL

BODY: Polyamid DIN-EN ISO 1043-1 PA6 GFR 30

HANDLE: Zamak DIN-EN 1774-ZnAl4Cu1

FINISH

HANDLE: Chrome or black coated

SPECIFICATIONS	D D
Stainless steel dust cap (Keyed alike)	03
Stainless steel dust cap (Keyed differ)	32
CH751 (Stainless steel dust cap)	07

FINISH	F
Chrome Plated	1
Black Coated	2

OPTION	O
Hole	0
Stud	1

Group Code	Version	Handle		Cylinder	Option
014	4	1	F	DD	

tel | + 90 212 721 44 44 fax | + 90 212 721 44 45

V:5

Espagnolette cam and fixed cam

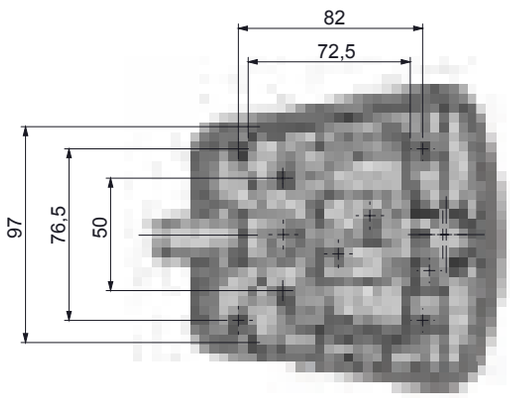

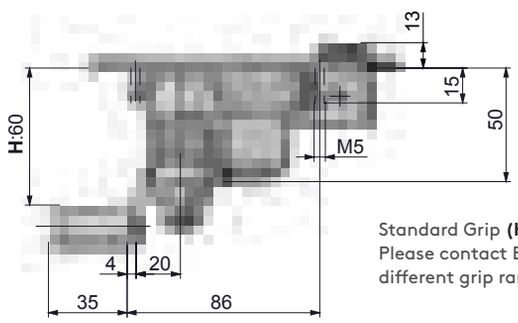

Standard Grip **(H)** is **60 mm**
Please contact Essentra Components for different grip ranges

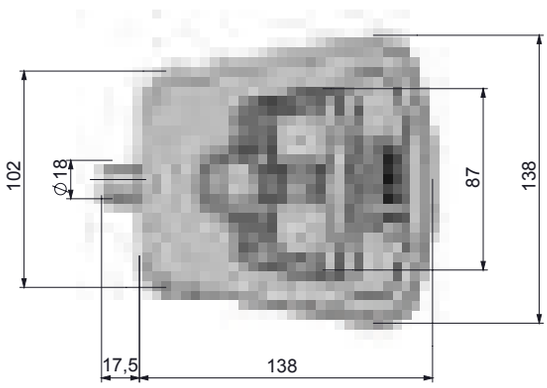

014 T HANDLE HEAVY-DUTY LOCK

IP 65

RoHS

L I R

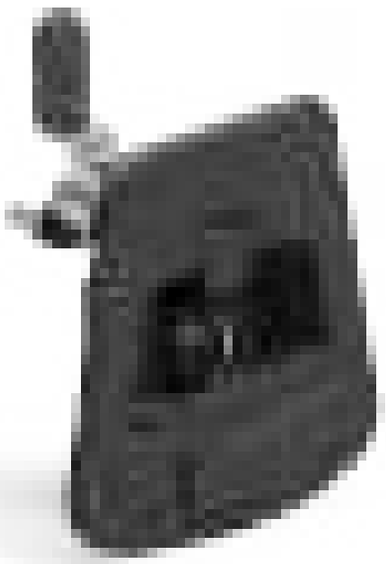



- Fixed Grip
- Three-point locking
- Easy fixing with roller cam
- Provides sealing with compression property
- Option to use with or without padlock
- Use rivets or bolts for fixing
- Can be supplied without cylinder

MATERIAL

BODY:	Polyamid DIN-EN ISO 1043-1 PA6 GFR 30
HANDLE:	Zamak DIN-EN 1774-ZnAl4Cu1

FINISH
HANDLE: Chrome or black coated

SPECIFICATIONS	D D
Stainless steel dust cap (Keyed alike)	03
Stainless steel dust cap (Keyed differ)	32
CH751 (Stainless steel dust cap)	07

FINISH	F
Chrome Plated	1
Black Coated	2

OPTION	O
Hole	0
Stud	1

Group Code	Version	Handle		Cylinder	Grip	Option
014	5	1	F	DD	60	

MINI 'T' HANDLE CABINET LOCK — 114

IP 65

RoHS

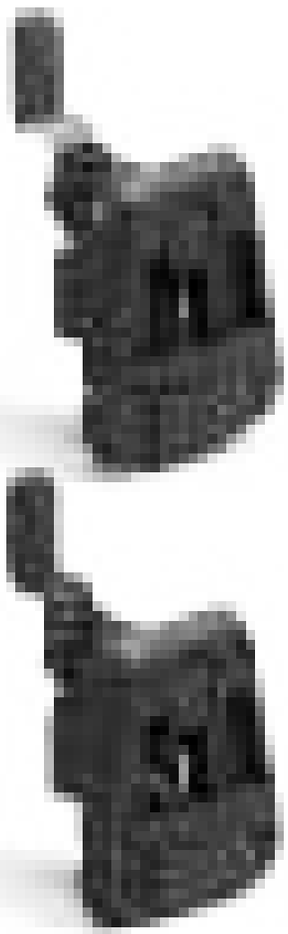

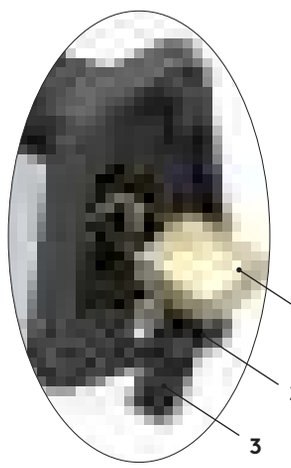

1- Double security
2- Cylinder locking system
3- Sliding dust cap

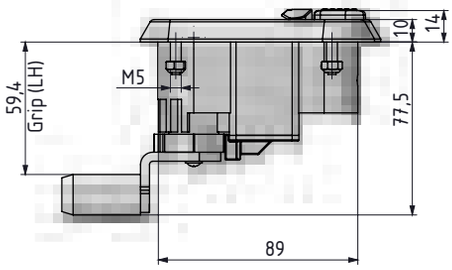

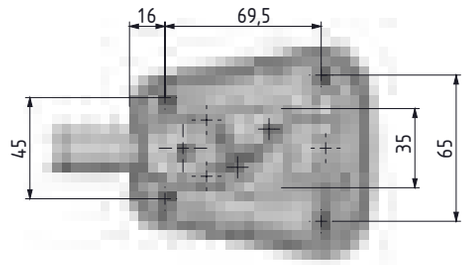

V: 2

Stud version

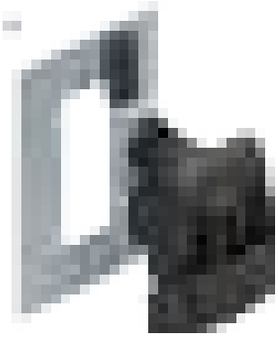

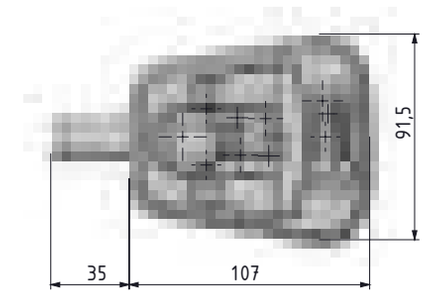

V: 3

Stud version

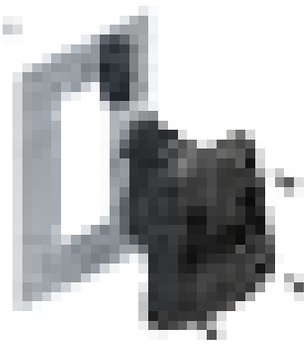

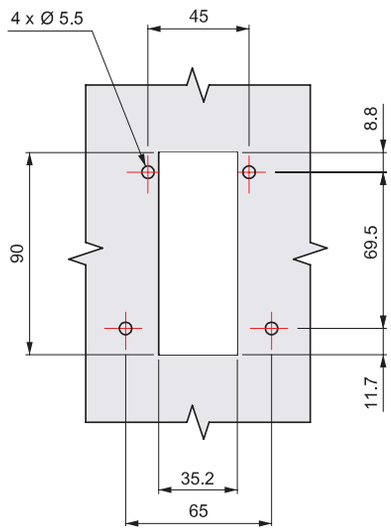

Cut Out
V2 - V3

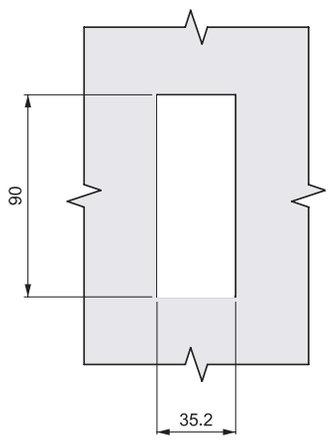

Cut Out
V1

tel | + 90 212 721 44 44 fax | + 90 212 721 44 45

114 MINI 'T' HANDLE CABINET LOCK

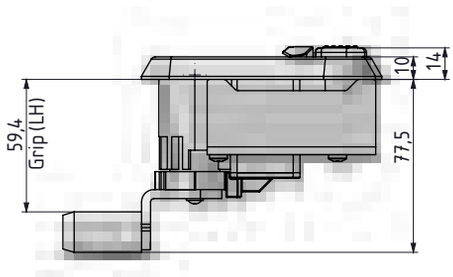

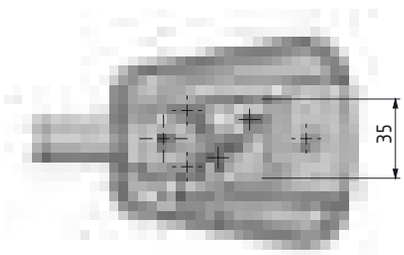

V: 1

Bracket version

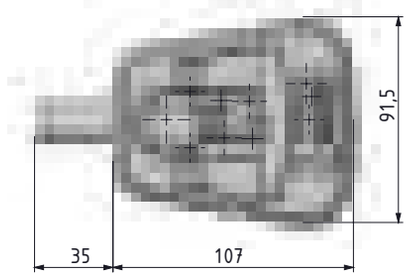

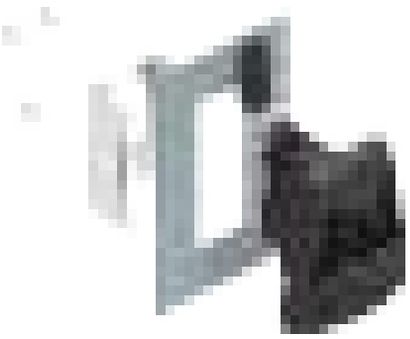

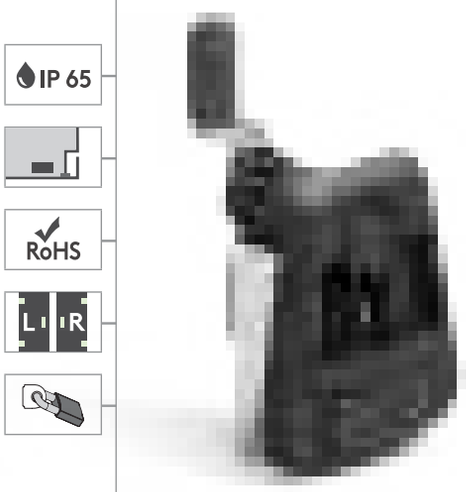

- Single point locking
- Easy locking by the roller cam
- 4 mm compression
- Optionally used with or without padlock.
- Fixing is possible by rivets, bolts or bracket
- Can be supplied without cylinder.
- Fixed grip
- Please contact us for different grip (LH)

MATERIAL

BODY:	Polyamid DIN-EN ISO 1043-1 PA6 GFR 30
HANDLE:	Zamak DIN-EN 1774-ZnAl4Cu1
CYLINDER:	Zamak DIN-EN 1774-ZnAl4Cu1

FINISH

HANDLE: Chrome or black coated

SPECIFICATIONS	D D
Stainless steel dust cap (Keyed alike)	03
Stainless steel dust cap (Keyed differ)	32
CH751 (Stainless steel dust cap)	07

FINISH	F
Chrome Plated	1
Black Coated	2

Group Code	Version	Handle		Cylinder	Cam
114	V	1	F	DD	01

MINI 'T' HANDLE CABINET LOCK

114



IP 65

RoHS

L R

V: 4

Adjustable roller cam

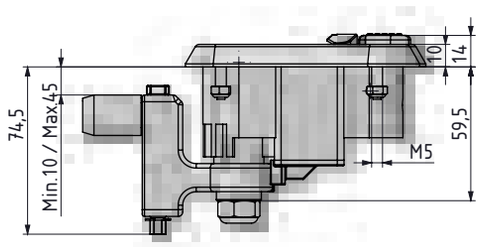

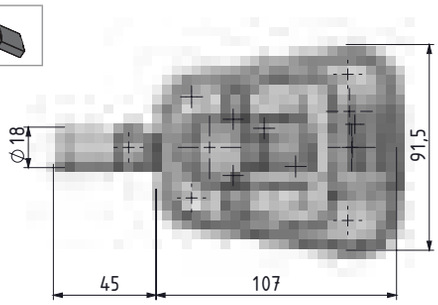

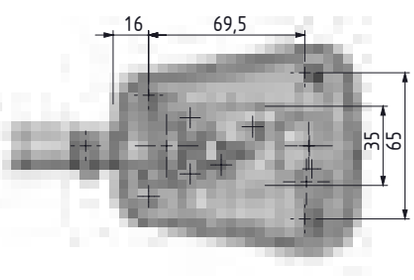

- Single-point locking
- 10 - 45 mm grip range
- Easy fixing with roller cam
- Provides sealing with compression property
- Option to use with or without padlock
- Use rivets or bolts for fixing
- Can be supplied without cylinder

MATERIAL

BODY: Polyamid DIN-EN ISO 1043-1PA6 GFR 30

HANDLE: Zamak DIN-EN 1774-ZnAl4Cu1

FINISH

HANDLE: Chrome or black coated

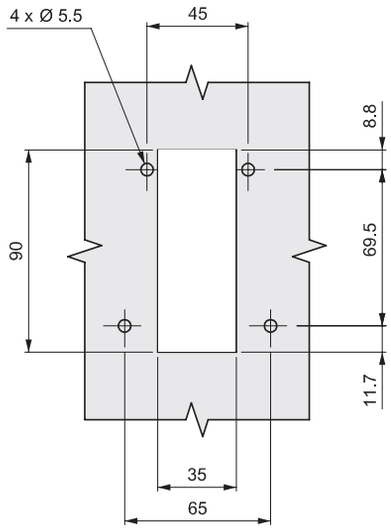

Cut Out

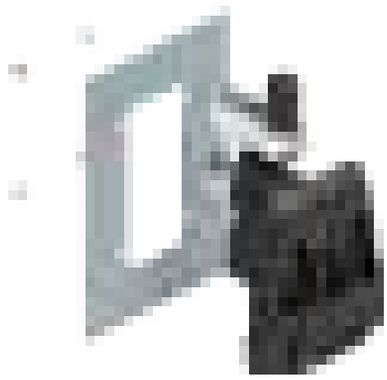

SPECIFICATIONS	D D
Stainless steel dust cap (Keyed alike)	03
Stainless steel dust cap (Keyed differ)	32
CH751 (Stainless steel dust cap)	07

FINISH	F
Chrome Plated	1
Black Coated	2

OPTION	O
Hole	0
Stud	1

Group Code	Version	Handle		Cylinder	Option
114	4	1	F	DD	

tel | + 90 212 721 44 44 fax | + 90 212 721 44 45

315 T HANDLE HEAVY-DUTY LOCK

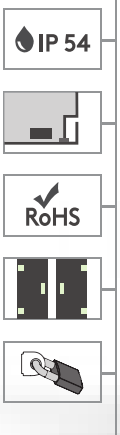

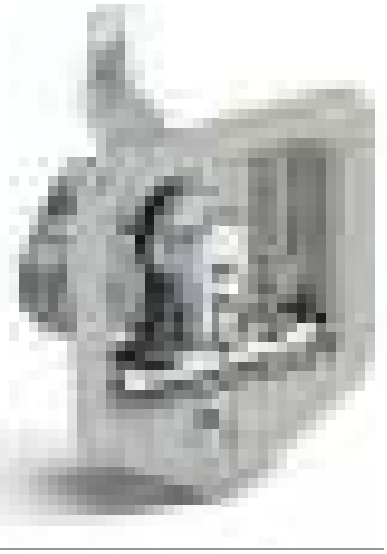

- Suitable for special equipment cases
- Adjustable cam for wide grip range
- Maximum padlock shackle diameter 9 mm

MATERIAL

BODY:	Stainless steel
HANDLE:	Zamak DIN-EN 1774-ZnAl4Cu1
PADLOCK HASP:	Stainless steel
CAM:	Steel

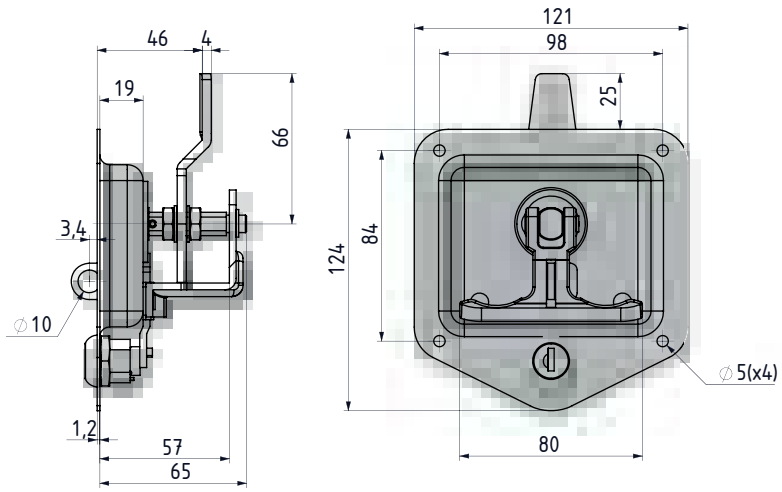

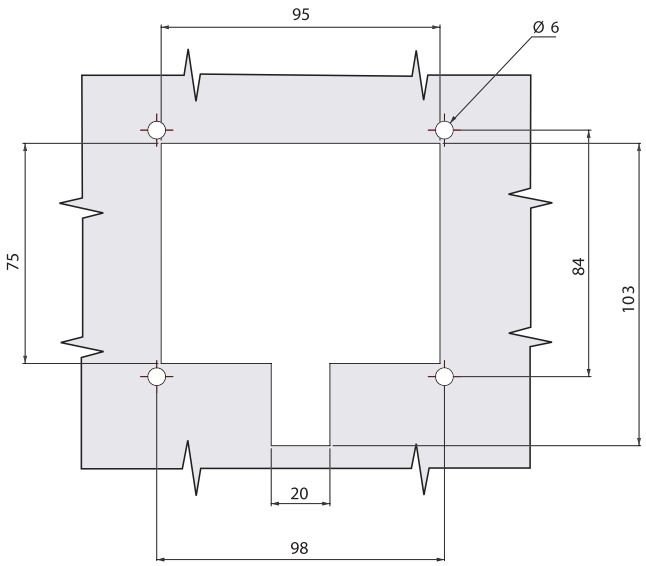

Cut Out



SPECIFICATIONS	D D
Stainless steel dust cap (Keyed alike)	03
Stainless steel dust cap (Keyed differ)	32

Group Code	Material	Finish	Cylinder
315	4	0	DD

T HANDLE HEAVY-DUTY LOCK — 115



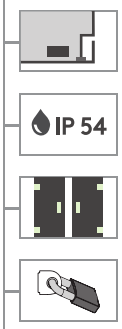

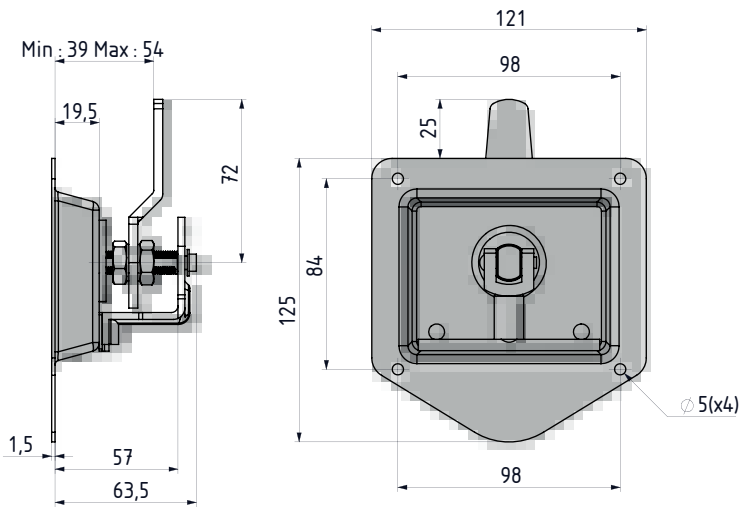

- Suitable for special equipment cases
- Adjustable cam for wide grip range
- Maximum padlock shackle diameter 9 mm

MATERIAL

BODY:	Stainless steel
HANDLE:	Zamak DIN-EN 1774-ZnAl4Cu1
PADLOCK HASP:	Stainless steel
CAM:	Steel



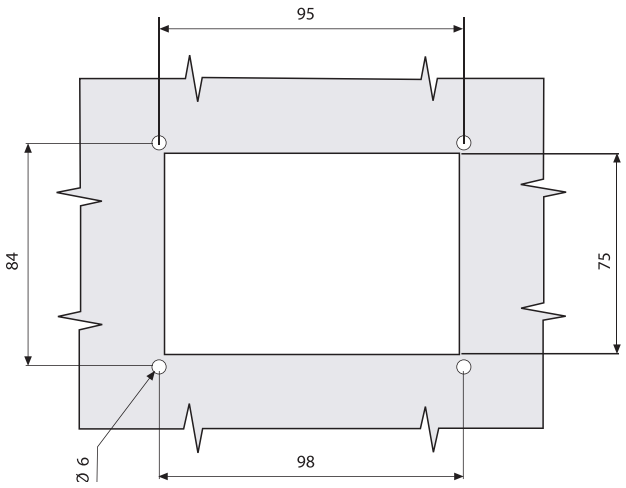

Cut Out

Group Code	Material	Finish
115	4	0

tel | + 90 212 721 44 44 fax | + 90 212 721 44 45

215 T HANDLE HEAVY-DUTY LOCK







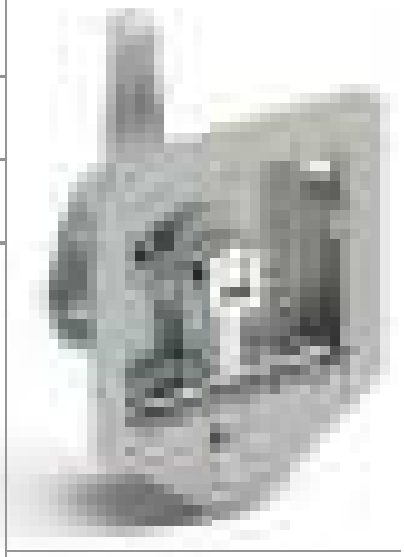

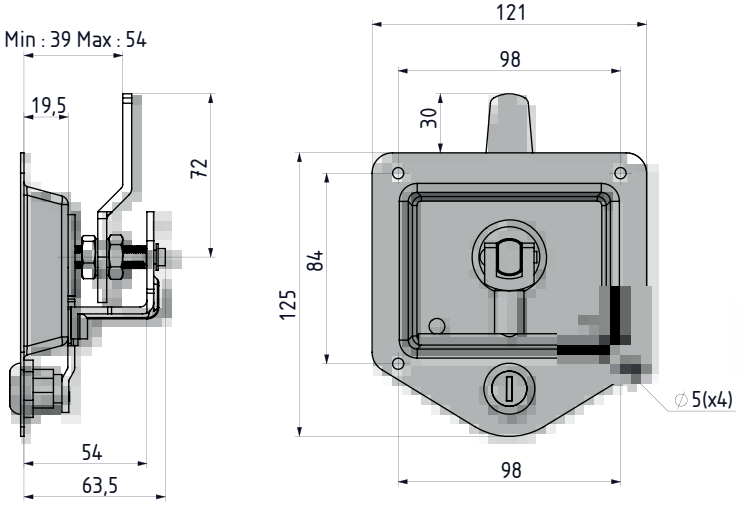

- Suitable for special equipment cases
- Adjustable cam for wide grip range

MATERIAL

BODY:	Stainless steel
HANDLE:	Zamak DIN-EN 1774-ZnAl4Cu1
CAM:	Steel

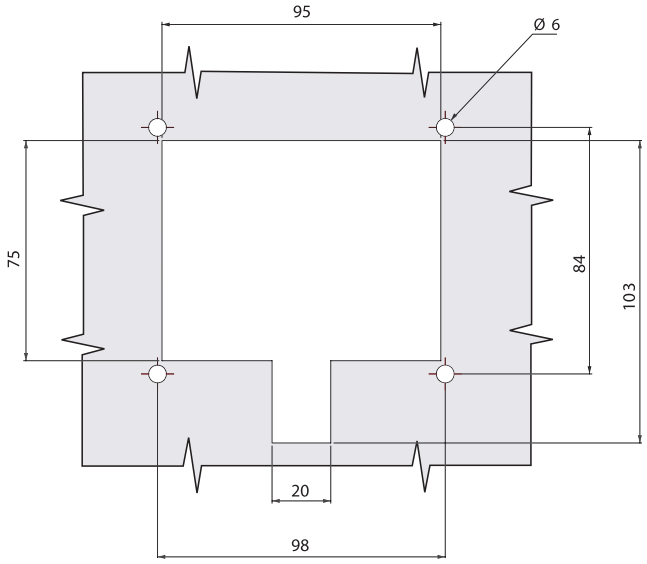

Cut Out

SPECIFICATIONS	D D
Stainless steel dust cap (Keyed alike)	03
Stainless steel dust cap (Keyed differ)	32

Group Code	Material	Finish	Cylinder
215	4	0	DD

T HANDLE HEAVY-DUTY LOCK — 015



- Secured by padlock
- Maximum padlock shackle diameter 9 mm
- Horizontal and vertical versions available

MATERIAL

BODY:	Steel
HANDLE:	Zamak DIN-EN 1774-ZnAl4Cu1
CAM:	Steel
SCREW:	Stainless steel
SEAL:	Polyurethane

FINISH

HANDLE: Chrome or black coated
BODY: Black coated

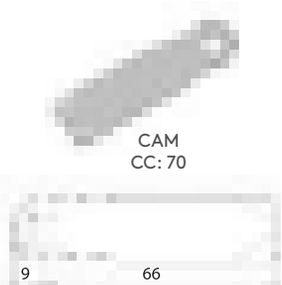

For cams please check pages: 172 - 173

V: 1 VERTICAL

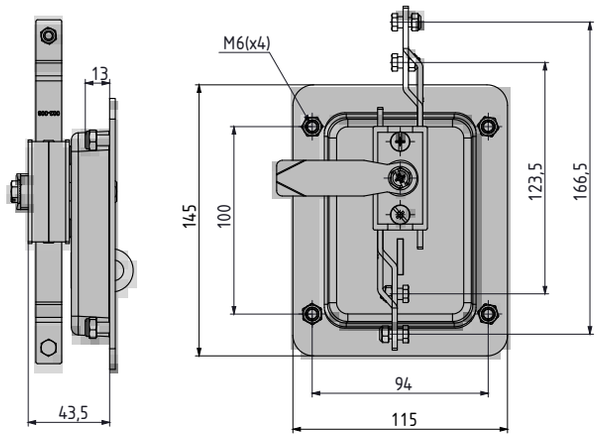

V: 2 HORIZONTAL

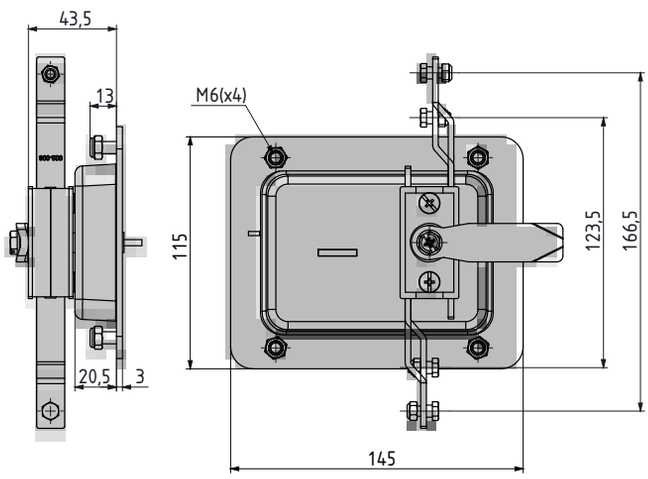

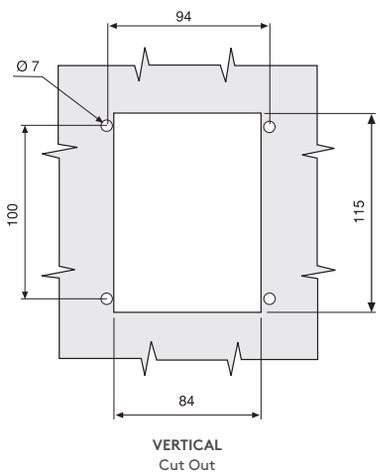

VERTICAL
Cut Out

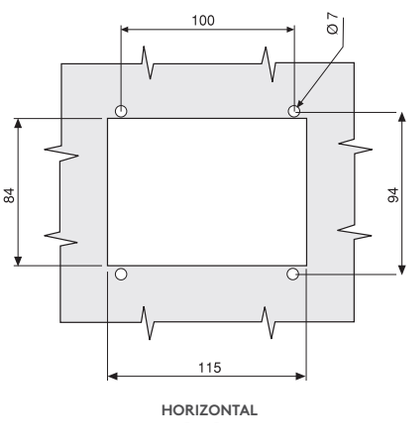

HORIZONTAL
Cut Out

FINISH	F
Chrome Plated	1
Black Coated	2

70	CAM
00	NO CAM

Group Code	Version	Handle	Body	Cam
015	V	F	2	CC

tel | + 90 212 721 44 44 fax | + 90 212 721 44 45

015 T HANDLE HEAVY-DUTY LOCK

V: 3
VERTICAL

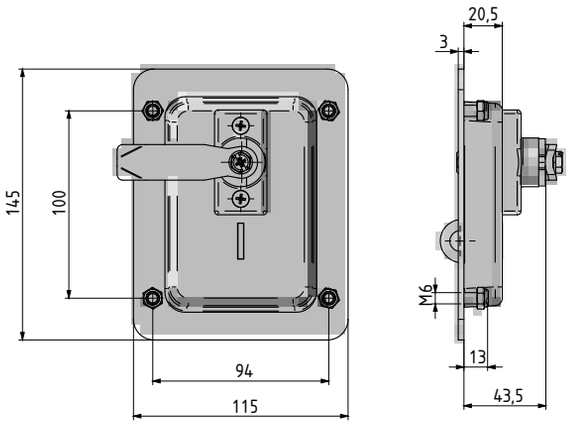

V: 4
HORIZONTAL

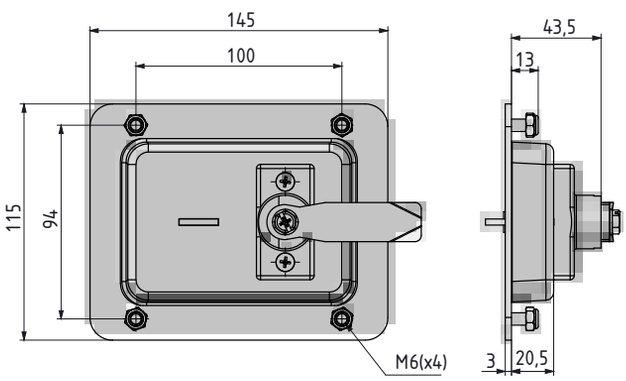

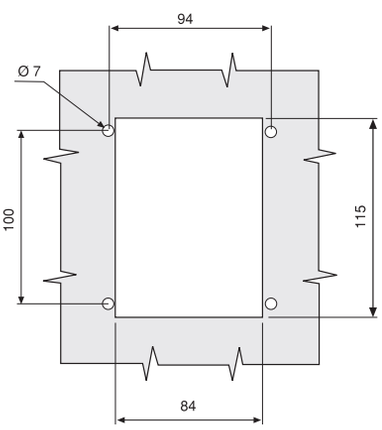

VERTICAL
Cut Out

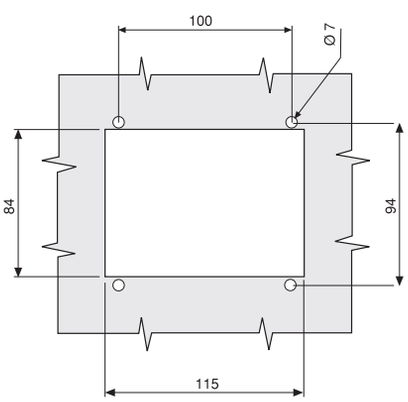

HORIZONTAL
Cut Out

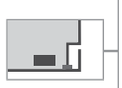







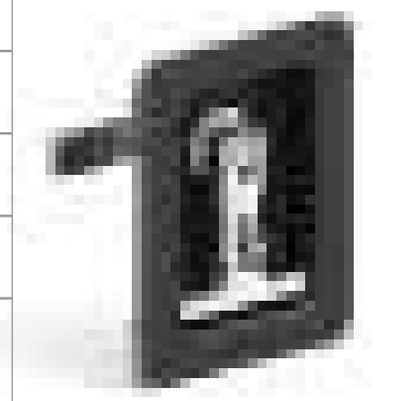

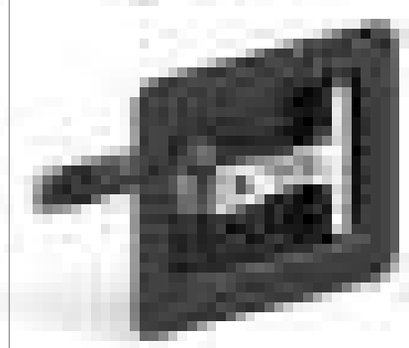

- Secured by padlock
- Maximum padlock shackle diameter 9 mm
- Horizontal and vertical versions available

MATERIAL

BODY:	Steel
HANDLE:	Zamak DIN-EN 1774-ZnAl4Cu1
CAM:	Steel
SCREW:	Stainless steel
SEAL:	Polyurethane

FINISH
HANDLE: Chrome or black coated
BODY: Black coated

FINISH	F
Chrome Plated	1
Black Coated	2

70	CAM
00	NO CAM

Group Code	Version	Handle	Body	Cam
015	V	F	2	CC

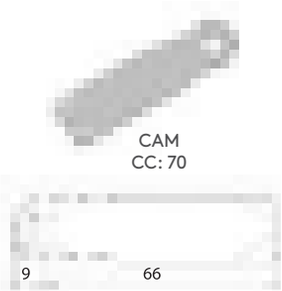

CAM
CC: 70

For cams please check pages: 172 - 173

T HANDLE HEAVY-DUTY LOCK — 018



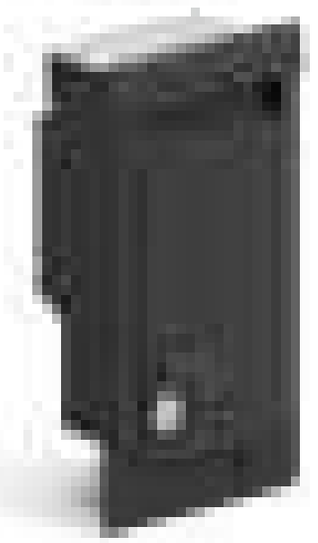





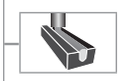



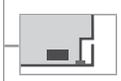



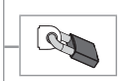

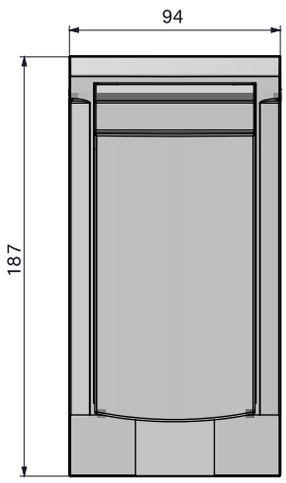

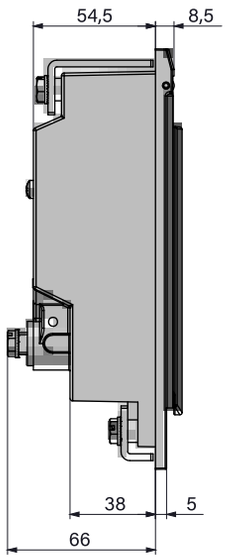

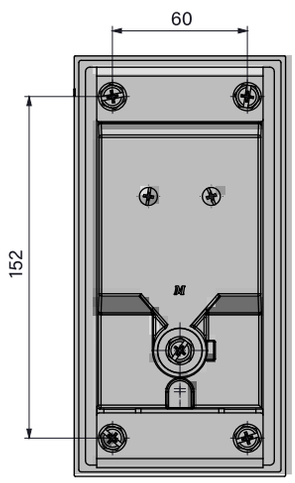

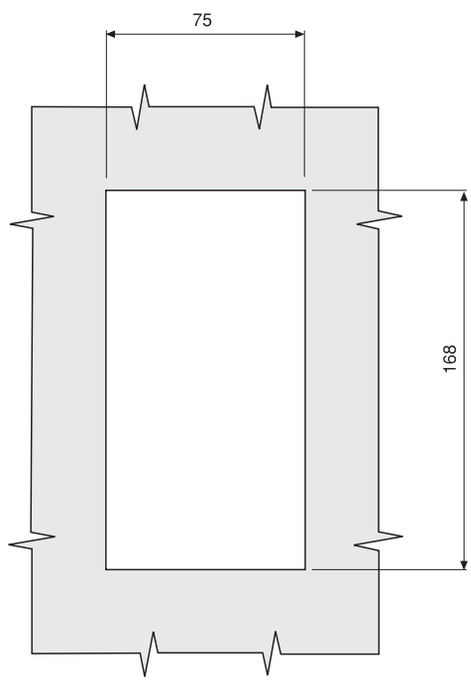

Cut Out

- Especially designed for medium voltage panels
- Foam gasketing provides sealing
- Maximum padlock shackle diameter 9 mm
- For customised cam and colours contact Essentra

MATERIAL

BODY:	Aluminium
COVER:	Aluminium
HANDLE:	Zamak DIN-EN 1774-ZnAl4Cu1
PIN:	Stainless steel
PADLOCK HASP:	Zamak

SPECIFICATIONS	D D
Keyed alike	01
Keyed differ	02

Group Code	Material	Finish	Cam
018	5	2	00

No cylinder version code system

Group Code	Version	Material	Finish	Cylinder	Cam
018	2	5	2	DD	00

Cylinder version code system

tel | + 90 212 721 44 44 fax | + 90 212 721 44 45

118 T HANDLE HEAVY-DUTY LOCK

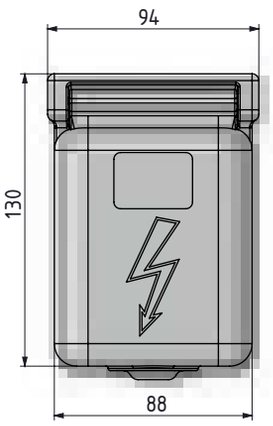

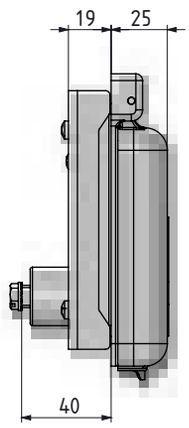

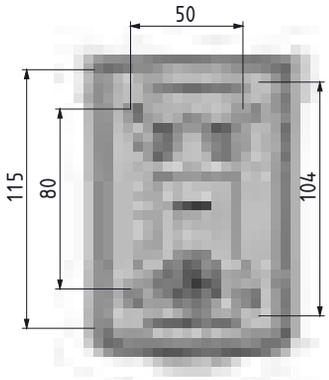

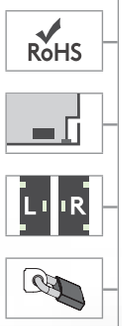



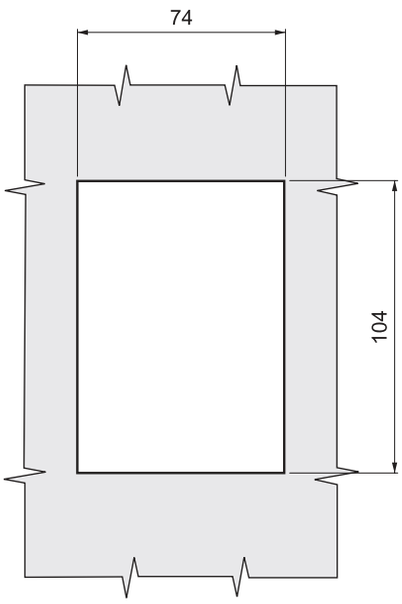

Cut Out

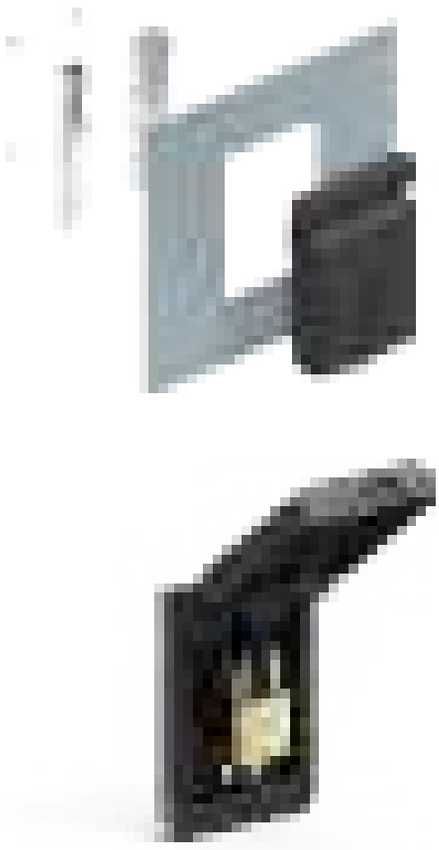

- For low voltage cabinets
- Optional polyurethane gasketing
- Maximum padlock shackle diameter 10 mm
- Option to be supplied without painting or plating
- For customised cam contact Essentra

MATERIAL

BODY:	Aluminium
COVER:	Aluminium
HANDLE:	Zamak DIN-EN 1774-ZnAl4Cu1
PAD LOCK HASP:	Aluminium

FINISH	F
No Finish	0
Black Coated	2

Group Code	Material	Finish	Cam
118	5	F	00

FAST FIND INDEX

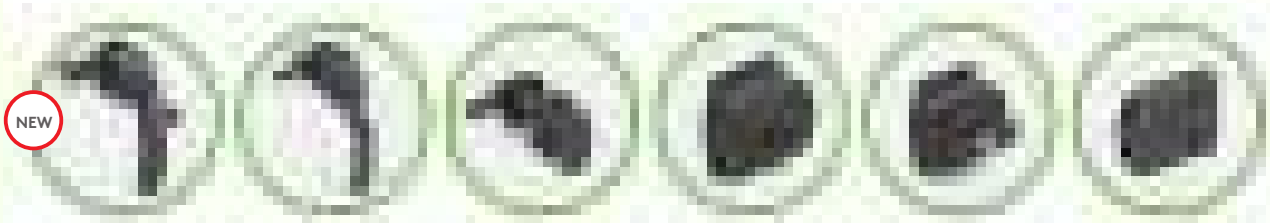

118-125 126-130 127 131 132-133 134-135

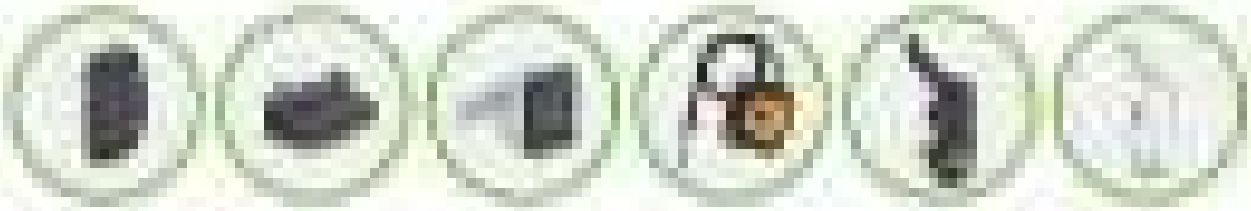

136 137 138 139 140 141

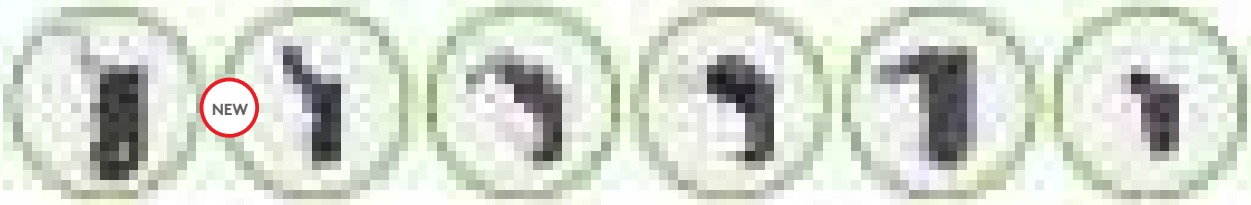

142 143 144-145 146 147 148

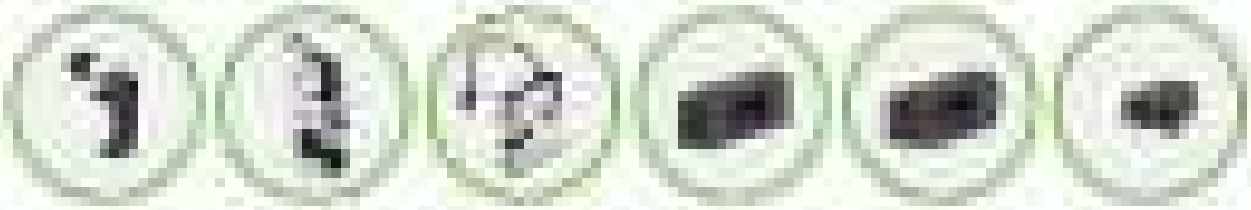

149 150-159 156-157 160 160 161

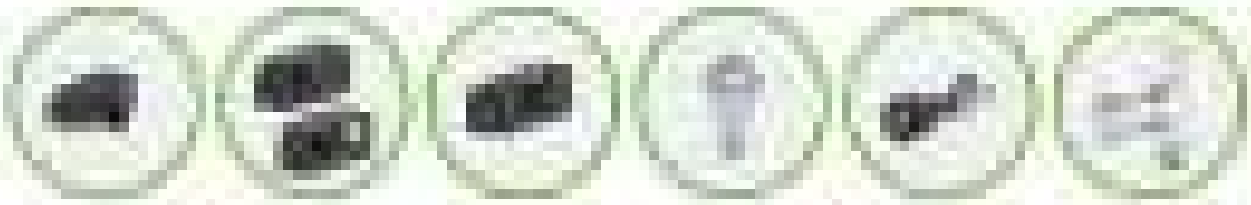

161 162 163 164 165 166



MISCELLANEOUS PRODUCTS

116-167

mesan
ESSENTRA COMPONENTS

email | info@mesanlocks.com web | www.mesanlocks.com

HVAC LOCK

112

NEW

RoHS

IP 66



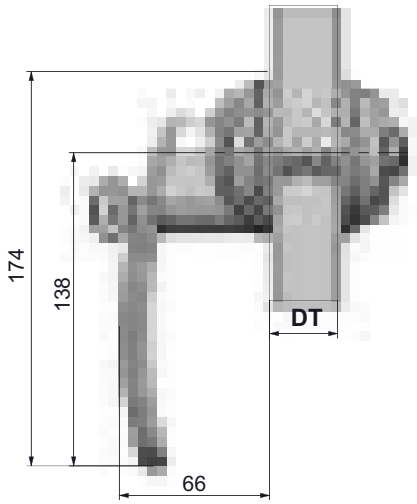

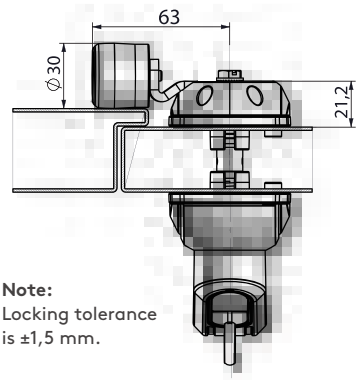

Note:
Locking tolerance is ±1,5 mm.

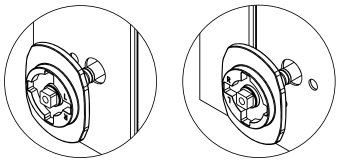

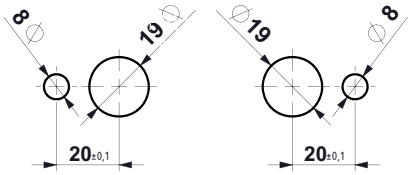

Left hand
Cut out

Right hand
Cut out

- Ergonomic and stylish design
- Quick fixing
- Secure locking
- Adjustable grip length
- **Suitable for outward swing doors**

For different door thicknesses, please contact our sales team

30
40
50
60
70
80

MATERIAL

BODY:	Polyamide DIN-EN ISO 1043-1 PA6 GFR 30
HANDLE:	PA6 GFR 30
CAM:	Steel – PA6 GFR 30
SEAL:	Polyurethane

⚠ This product can be produced as anti-bacterial with PA6 GFR 30% + 6% content. The raw material used has been tested in the DIN EN ISO 846 standard.

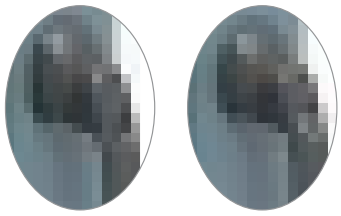

No cylinder Driver



Padlock application

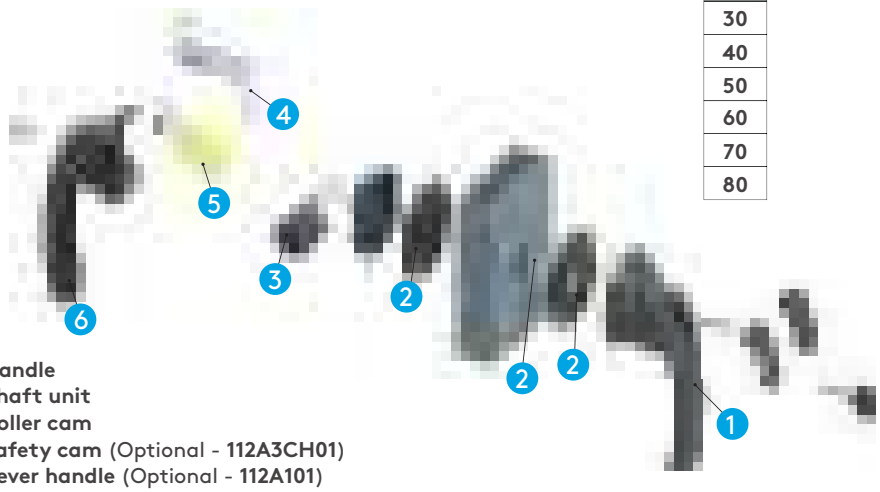

1: Handle
2: Shaft unit
3: Roller cam
4: Safety cam (Optional - **112A3CH01**)
5: Lever handle (Optional - **112A101**)
6: Safety interior handle (Optional - **112A2**)

CYLINDER TYPE	DD
No Cylinder	00
Keyed alike (Stainless steel dust cap)	03
Keyed differ (Stainless steel dust cap)	32
Euro key (5333)	05

DRIVER TYPE	DD
8 mm Square	28
10 mm Square	20
7 mm Triangular	37
8 mm Hexagon	68

Group Code	Version	Door thickness	Cylinder Driver	Cam	For only padlock*
112	1	DT	DD	CC	

*: add **"1"** for padlock application

For cams please check pages: 122
For accesseories pages 123 - 124
For keys please check pages: 124

tel | + 90 212 721 44 44 fax | + 90 212 721 44 45

112

HVAC LOCK

NEW

RoHS

IP 65



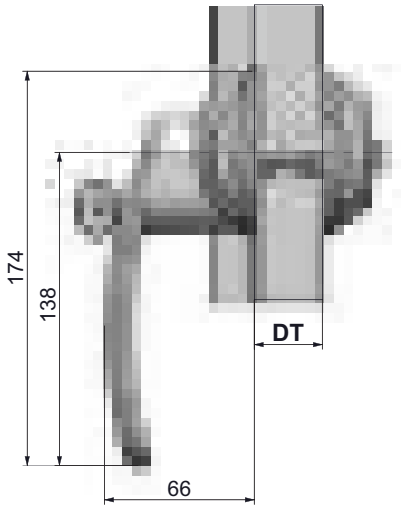

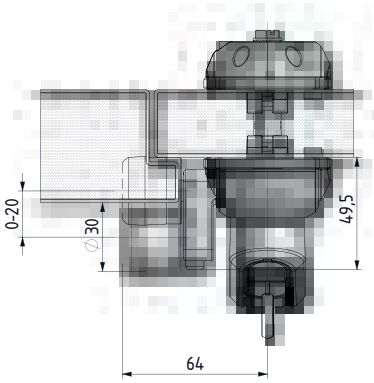

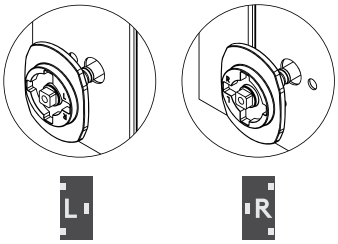

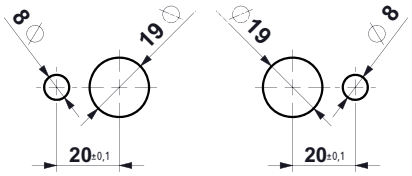

Left hand
Cut out

Right hand
Cut out

- Ergonomic and stylish design
- Quick fixing
- Secure locking
- Adjustable grip length
- **Suitable for inward swing doors**

MATERIAL

BODY:	Polyamide DIN-EN ISO 1043-1 PA6 GFR 30
HANDLE:	PA6 GFR 30
CAM:	Steel – PA6 GFR 30
SEAL:	Polyurethane

For different door thicknesses, please contact our sales team

30
40
50
60
70
80

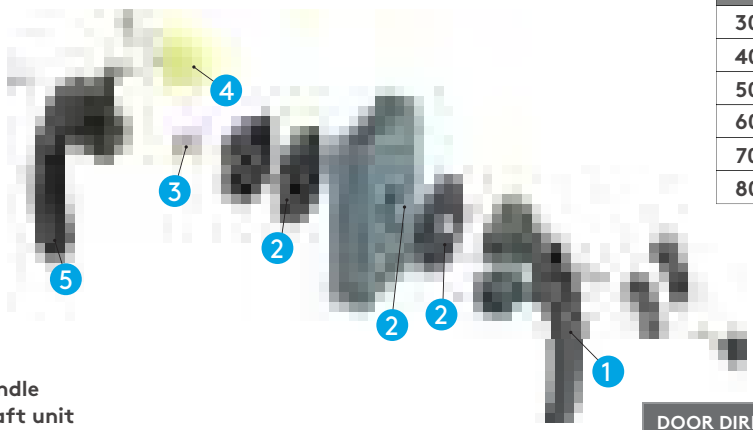

1: Handle
2: Shaft unit
3: Fixing device
4: Lever handle (Optional - **112A101**)
5: Safety interior handle (Optional - **112A2**)

DOOR DIRECTION	
Right hand	001
Left hand	002

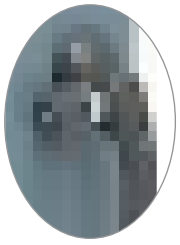

No cylinder

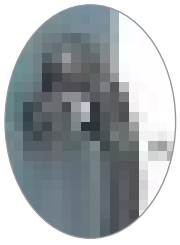

Driver

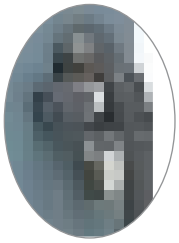

Padlock application

CYLINDER TYPE	DD
No Cylinder	00
Keyed alike (Stainless steel dust cap)	03
Keyed differ (Stainless steel dust cap)	32
Euro key (5333)	05

DRIVER TYPE	DD
8 mm Square	28
10 mm Square	20
7 mm Triangular	37
8 mm Hexagon	68

Group Code	Version	Door thickness	Cylinder Driver	Cam	For only padlock*	Door Direction
112	2	DT	DD	CC		

*: add **"1"** for padlock application

For cams please check pages: 122
For accesseories pages 123 - 124
For keys please check pages: 124

HVAC LOCK

112

NEW

RoHS

IP 66



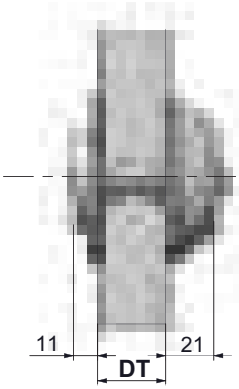

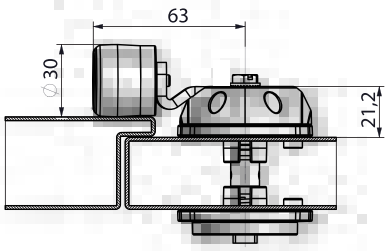

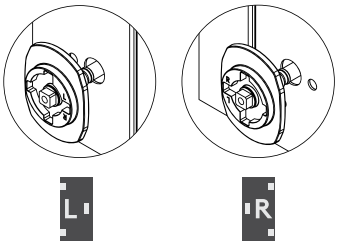

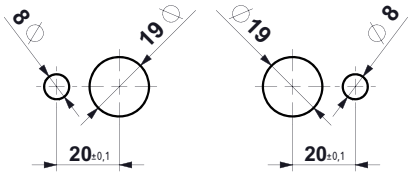

Left hand
Cut out

Right hand
Cut out

- No handle application
- Quick fixing
- Secure locking
- Adjustable grip length

MATERIAL

BODY:	Polyamide DIN-EN ISO 1043-1 PA6 GFR 30
CAM:	Steel – PA6 GFR 30
SHAFT:	Steel
SEAL:	Polyurethane

For different door thicknesses, please contact our sales team



30
40
50
60
70
80

1: Key (36820)
2: Cover (Optional - **112A6**)
3: Shaft unit
4: Roller cam
5: Safety cam (Optional - **112A3CH01**)
6: Lever handle (Optional - **112A101**)
7: Safety interior handle (Optional - **112A2**)

Group Code	Version	Door thickness	Cam
112	3	DT	CC

For cams please check pages: 122
For accesseories pages 123 - 124
For keys please check pages: 124

tel | + 90 212 721 44 44 fax | + 90 212 721 44 45

112

HVAC LOCK

NEW

RoHS

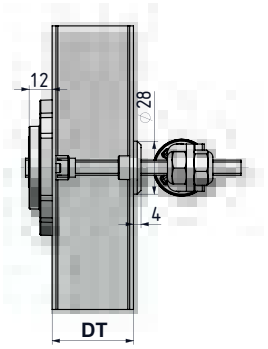

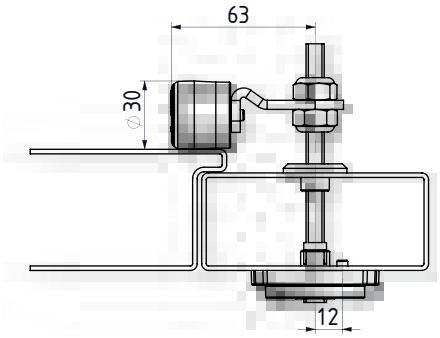

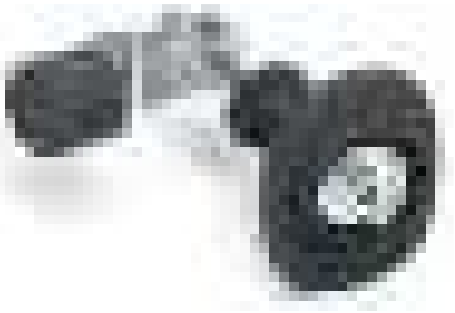

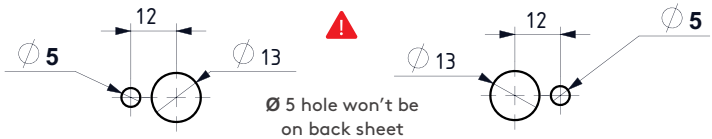

Ø 5 hole won't be on back sheet

Left hand
Cut out

Right hand
Cut out

- No handle application
- Quick fixing
- Secure locking
- Adjustable grip length

MATERIAL

BODY:	Polyamide DIN-EN ISO 1043-1 PA6 GFR 30
CAM:	Steel – PA6 GFR 30
SHAFT:	Steel
SEAL:	Polyurethane

For different door thicknesses, please contact our sales team

DOOR THICKNESS	DT
20 -50 mm thickness panel	01
50 -80 mm thickness panel	02

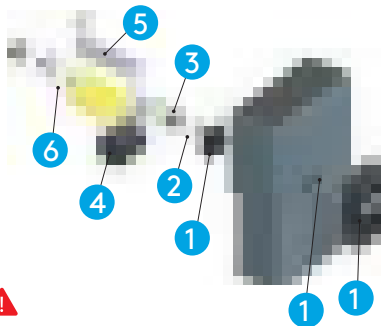

1: Shaft unit
2: Ring
3: Nut
4: Roller cam
5: Safety cam (Optional - 112A3CH02)
6: Lever handle (Optional - 112A102)

Group Code	Version	Door thickness	Cam
112	4	DT	CC

For cams please check pages: 122
For accesseories pages 123 - 124
For keys please check pages: 124

HANDLES

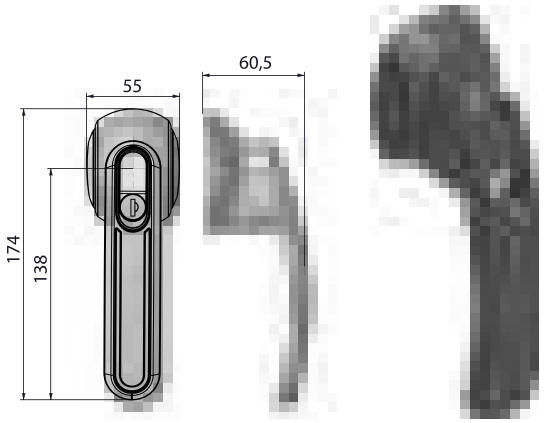



Suitable for outward swing doors

Group Code	Version	Cylinder Driver	For only padlock*
112H	1	DD	

*: add "1" for padlock application

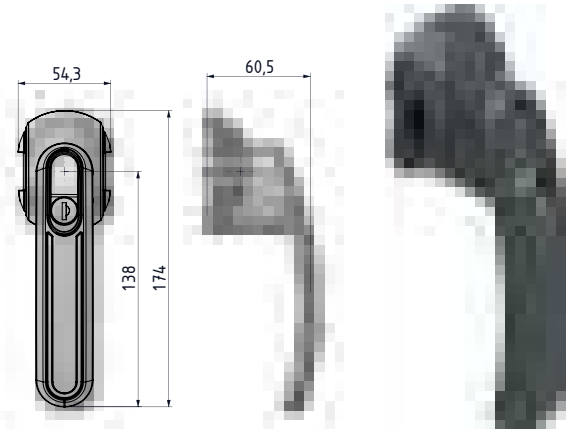



Suitable for inward swing doors

Group Code	Version	Cylinder Driver	For only padlock*
112H	2	DD	

*: add "1" for padlock application

Handles can be ordered individually.
Shaft unit is not included.

CAMS



Fixed cam (Round roller)



Fixed cam (Triangle Roller)



Adjustable cam (Round roller)



Adjustable cam (Triangle Roller)

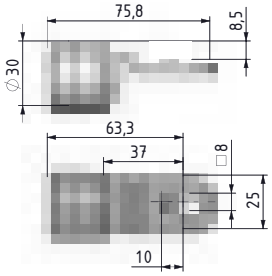

STOCK CODE	CC
112C01	01
* 112C11	11

*: For only multiple locking system

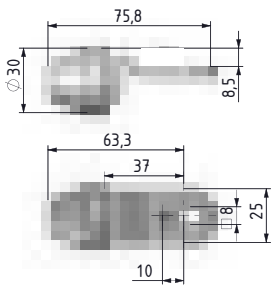

STOCK CODE	CC
112C02	02
*112C12	12

*: For only multiple locking system

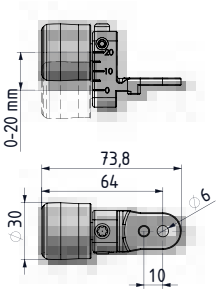

STOCK CODE	CC
112C03	03

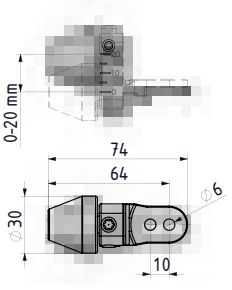

STOCK CODE	CC
112C04	04

tel | + 90 212 721 44 44 fax | + 90 212 721 44 45

ACCESSORIES



Lever handle

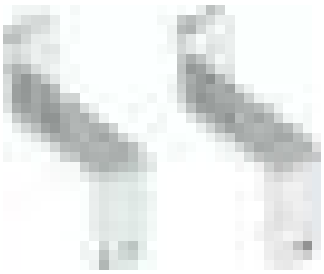

Safety cam

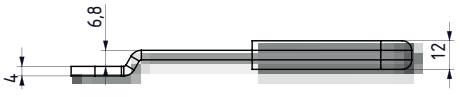

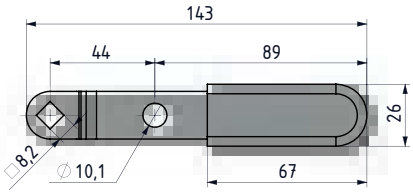

STOCK CODE
112A102

Only version 4 is used.

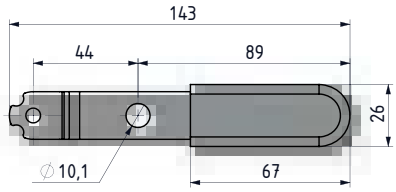

STOCK CODE
112A101

Only version 1.2.3 is used.

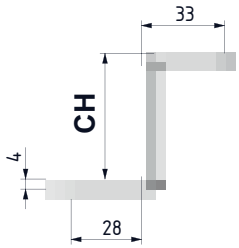

CH
25
50
75
100

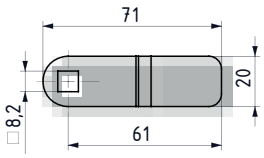

STOCK CODE
112A3CH02

Only version 4 is used.

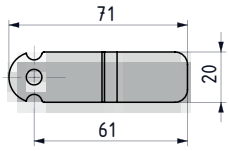

STOCK CODE
112A3CH01

Only version 1.2.3 is used.



Safety interior handle

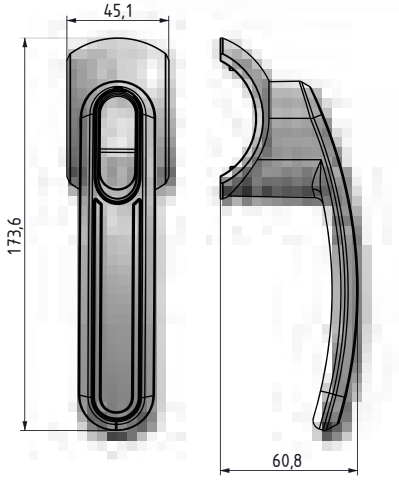

STOCK CODE
112A2



Multiple locking unit

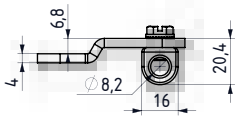

STOCK CODE
112A502

Only version 4 is used.

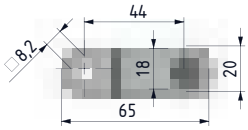

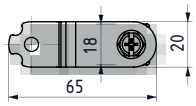

STOCK CODE
112A501

Only version 1.2.3 is used.

ACCESSORIES



Rod adapter

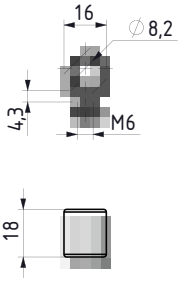

STOCK CODE
112A4



Rod

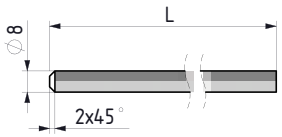

GROUP CODE	LENGTH
112IC	L



Cover

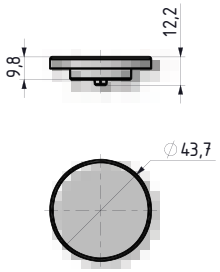

STOCK CODE
112A6

KEYS



8 mm Square

STOCK CODE
36828



10 mm Square

STOCK CODE
36820



7 mm Triangular

STOCK CODE
36837



8 mm Hexagon

STOCK CODE
36868

tel | + 90 212 721 44 44 fax | + 90 212 721 44 45

MULTIPOINT LOCKING SYSTEM

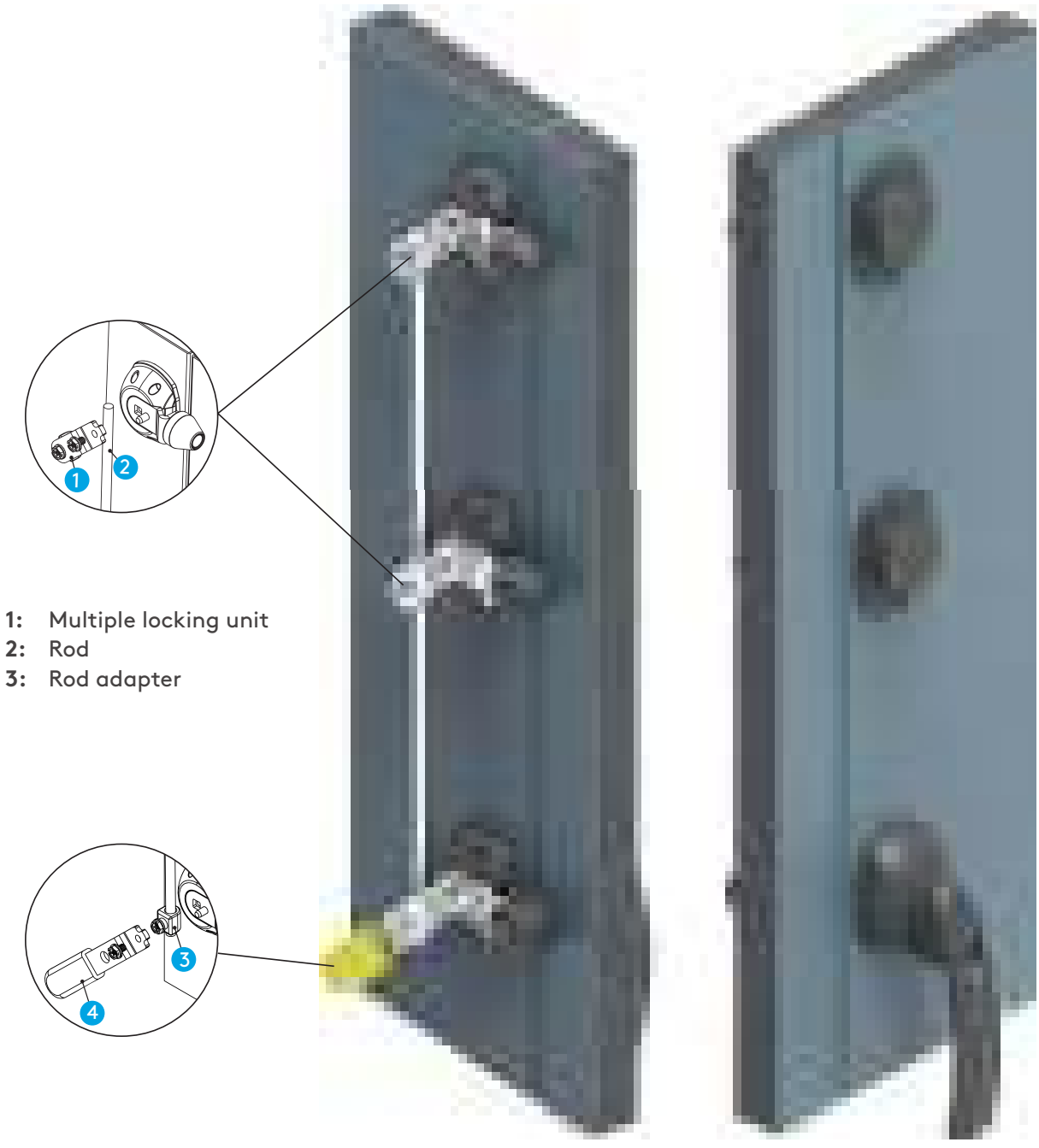

1: Multiple locking unit
2: Rod
3: Rod adapter

Customizable solutions in multi-point locking system by bespoke rod dimensions are upon request.
Please contact our sales team for your technical inquires (Sample application in image).

HVAC LOCK

012



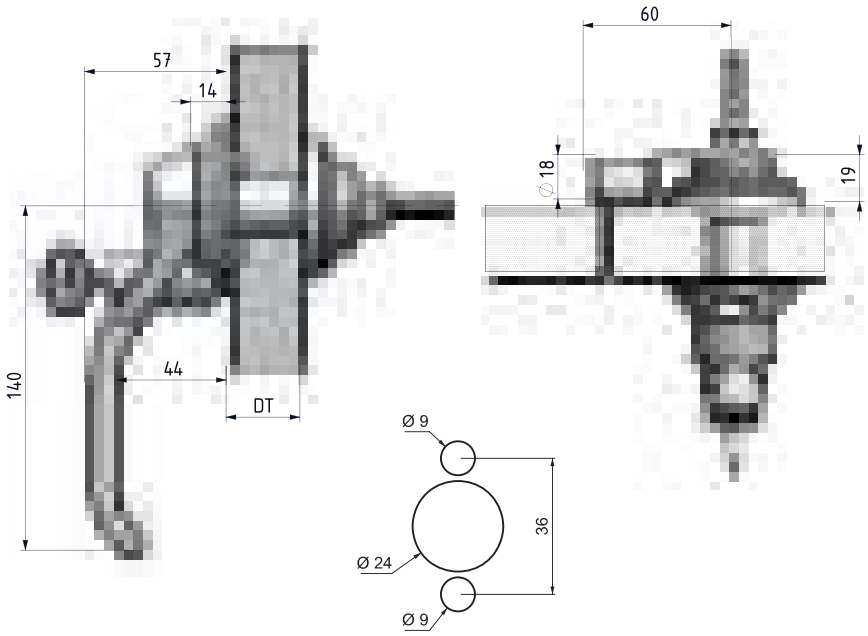

Cut out

- Removable handle for easy assembly on site
- Roller cam requires less force for locking
- With or without cylinder and driver available
- Can be used for different door thicknesses
- Internal handle available for opening door from inside for safety purposes

MATERIAL

BODY:	Polyamide DIN-EN ISO 1043-1 PA6 GFR 30
HANDLE:	Polyamide DIN-EN ISO 1043-1 PA6 GFR 30
CAM:	Steel

⚠ This product can be produced as anti-bacterial with PA6 GFR 30% + 6% content. The raw material used has been tested in the DIN EN ISO 846 standard.

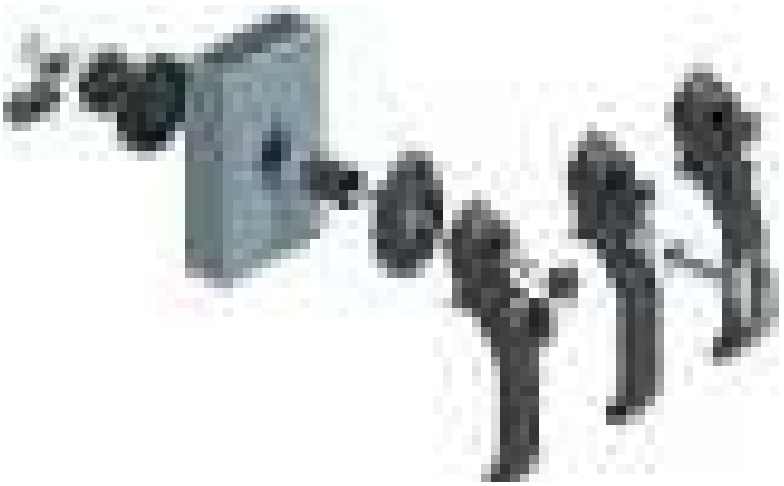

	CYLINDER	DD
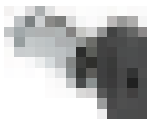	No cylinder	00
	Keyed alike (Stainless steel dust cap)	03
	Keyed differ (Stainless steel dust cap)	32
	Euro key (5333)	05
	CH751 (Stainless steel dust cap)	07

DRIVER	
10 mm Square	
DD	
20	

DT
30
40
50
60
80

Group Code	Version	Door thickness	Cylinder Driver	Cam
012	1	DT	DD	CC

tel | + 90 212 721 44 44 fax | + 90 212 721 44 45

012

HVAC LOCK

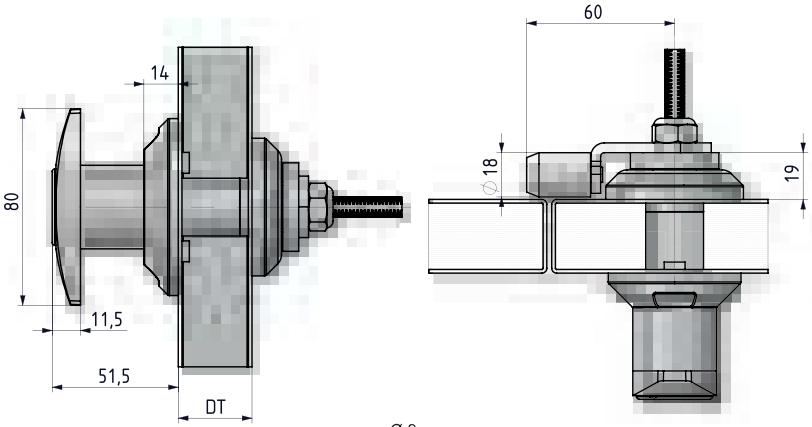

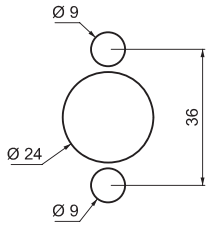

Cut out

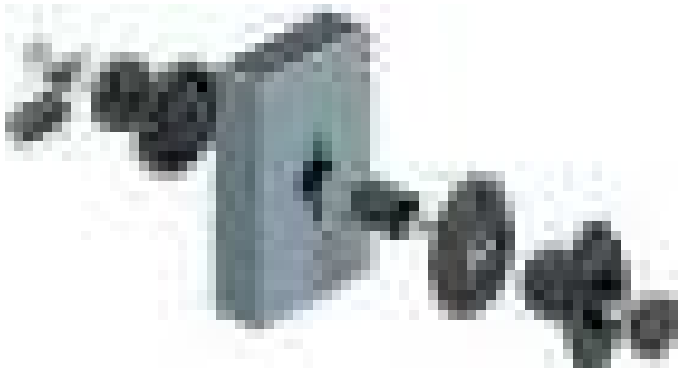

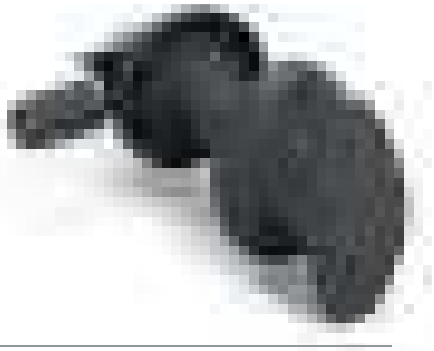

- Roller cam requires less force for locking
- Without-cylinder version
- Can be used for different door thicknesses
- Compact design requires less space

MATERIAL

BODY:	Polyamide DIN-EN ISO 1043-1 PA6 GFR 30
HANDLE:	Polyamide DIN-EN ISO 1043-1 PA6 GFR 30
CAM:	Steel

ADJUSTABLE SCREW: Steel

Group Code	Version	Door thickness	Cylinder	Cam
012	3	DT	00	CC

DT
30
40
50
60
80

HVAC LOCK

012

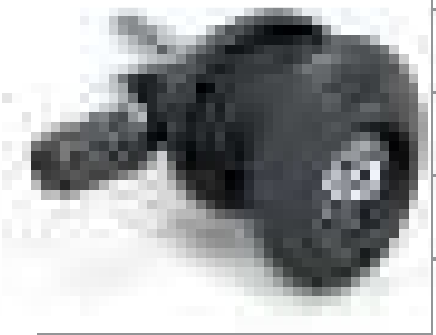

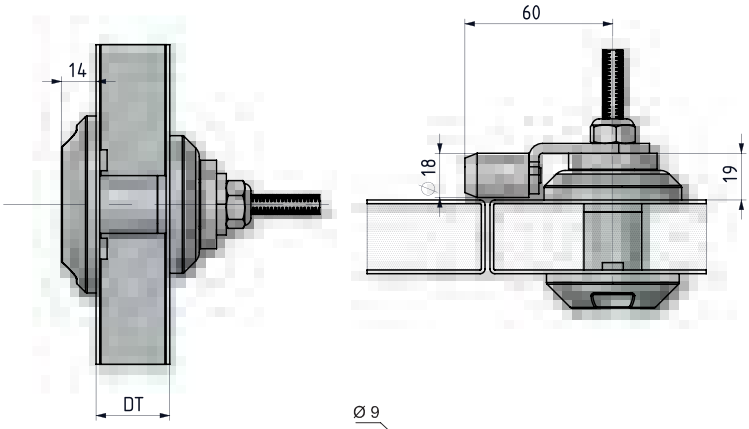

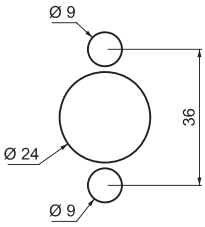

Cut out

- Can be operated without handle

MATERIAL
BODY: Polyamide DIN-EN ISO 1043-1 PA6 GFR 30
CAM: Steel
ADJUSTABLE SCREW: Steel

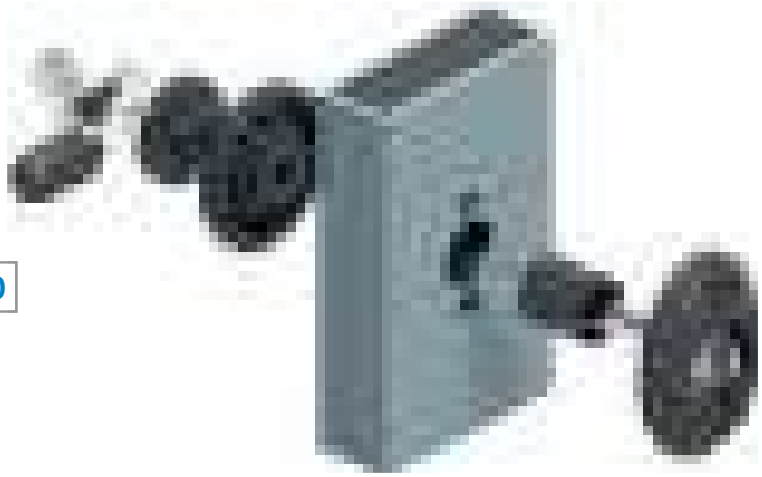

METAL KEY

368.20

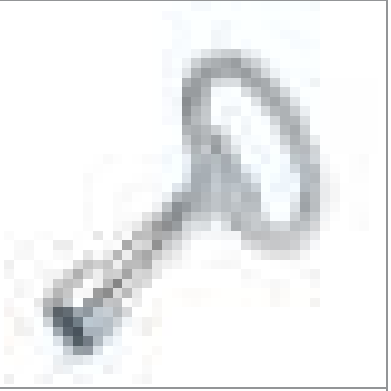

MATERIAL
Zamak DIN-EN 1774-ZnAl4Cu1

FINISH
Chrome plated

Group Code	Version	Door thickness	Cam
012	4	DT	01

DT
30
40
50
60
80

tel | + 90 212 721 44 44 fax | + 90 212 721 44 45

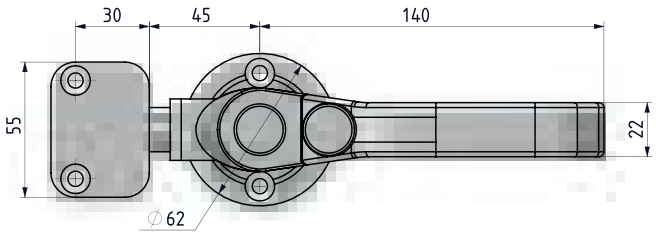

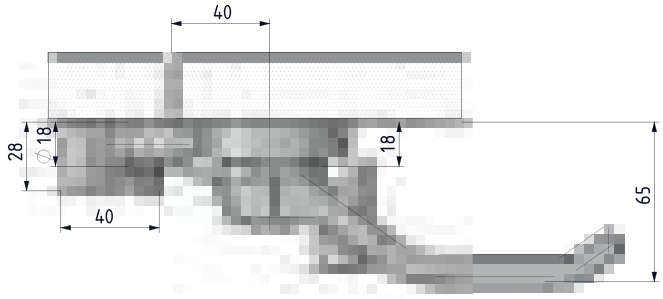

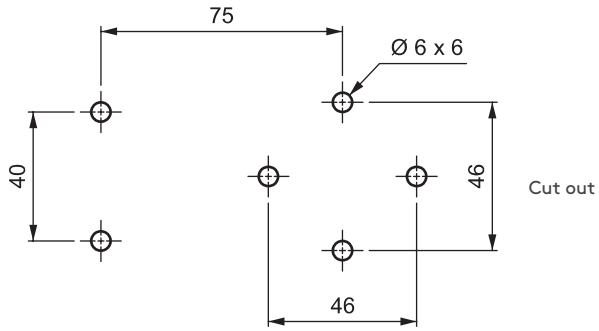



Group Code	Version	Cylinder	Cam
012	2	00	01

012 HVAC LOCK

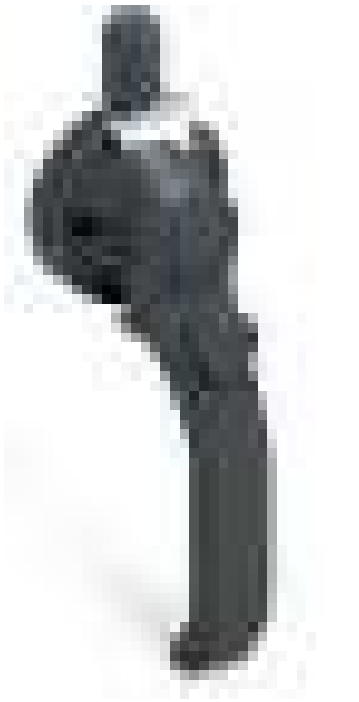

- Outside locking system provides safety for pressurised doors
- Roller cam requires less force for locking
- Can be used for different door thicknesses

MATERIAL

BODY:	Polyamide DIN-EN ISO 1043-1 PA6 GFR 30
HANDLE:	Polyamide DIN-EN ISO 1043-1 PA6 GFR 30
CAM:	Steel

012 A2 STRIKING PLATE

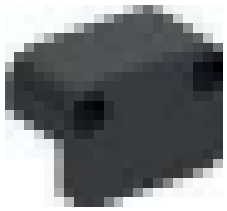

MATERIAL
Zamak DIN-EN 1774-ZnAl4Cu1

LEVER HANDLE

012 A1



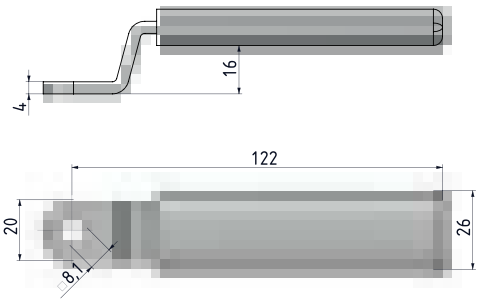



- Lever handle is optional accessory
- Can only be used when external handle is at unlocking position

MATERIAL
Steel

FINISH
Polyamide overmould

INTERNAL SAFETY HANDLE

012 A3

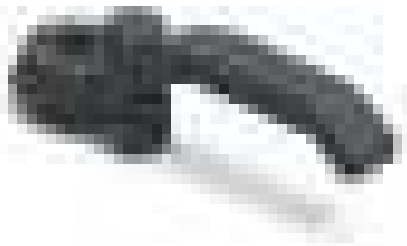

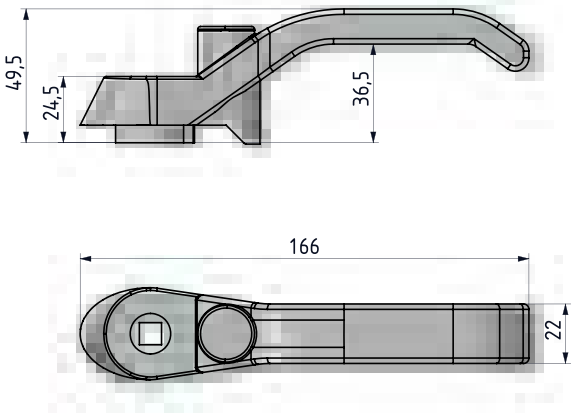

MATERIAL
Polyamide DIN-EN ISO
1043-1 PA6 GFR 30



tel | + 90 212 721 44 44 fax | + 90 212 721 44 45

612 HVAC LOCK

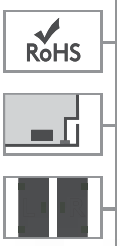



- Outside locking system provides safety for pressurised doors
- For logo application please contact Essentra

MATERIAL

BODY:	Zamak DIN-EN 1774-ZnAl4Cu1
DRIVER:	Zamak DIN-EN 1774-ZnAl4Cu1

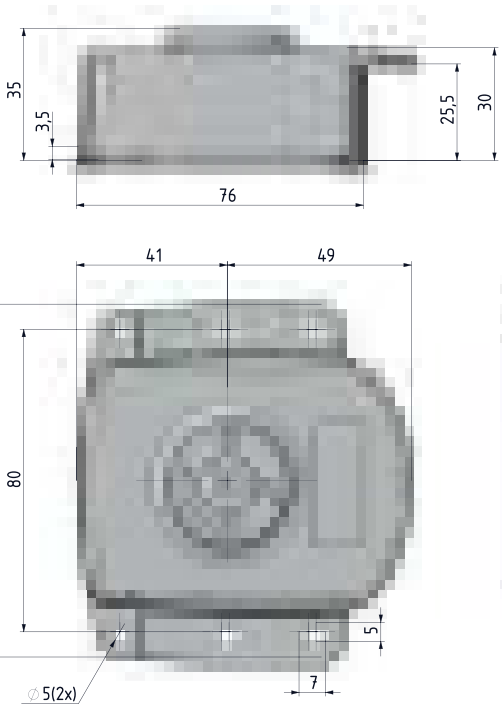

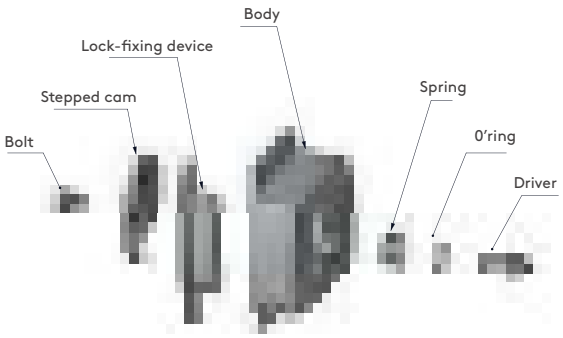

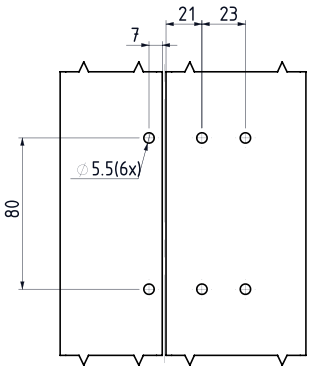

Cut out

MATERIAL	M	FINISH	F
Zamak	1	Chrome plated	1
		Black coated	2

Group Code	Body		Driver		Driver No
612	1	2	1	F	DD

For drivers please check page: 194

HVAC LOCK 'T' HANDLE

612



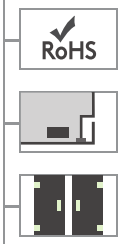

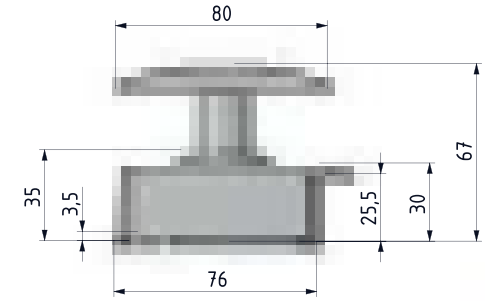

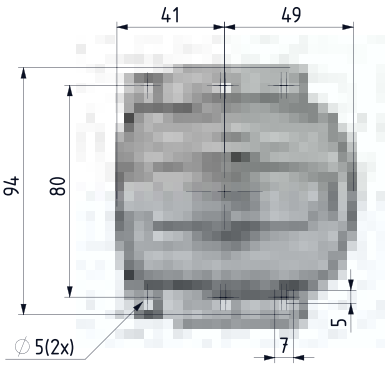

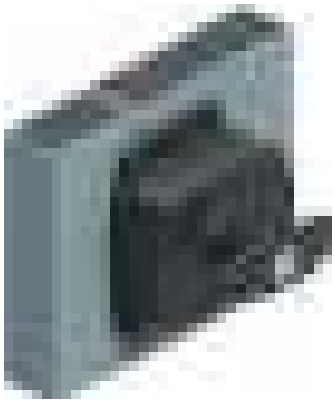

- Outside locking system provides safety for pressurised doors

MATERIAL

BODY:	Zamak DIN-EN 1774-ZnAl4Cu1
HANDLE:	Zamak DIN-EN 1774-ZnAl4C or PA6 GFR 30

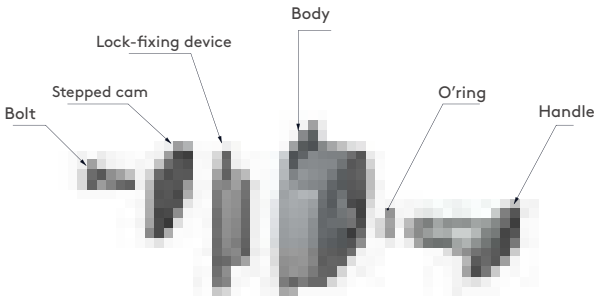

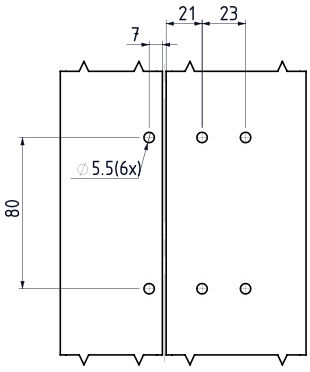

Cut out

CYLINDER	SPECIFICATIONS	DD
	No Cylinder	00
	Keyed alike (Stainless steel dust cap)	03
	Keyed differ (Stainless steel dust cap)	32
	Euro key (5333)	05
	CH751 (Stainless steel dust cap)Euro key (5333)	07

MATERIAL	M	FINISH	F
Zamak	1	Chrome plated	1
		Black coated	2
Plastic	2	No finish	0

Group Code	Handle	Body		Handle		Cylinder
612	110	1	2	M	F	DD

tel | + 90 212 721 44 44 fax | + 90 212 721 44 45

612 HVAC LOCK 'L' HANDLE

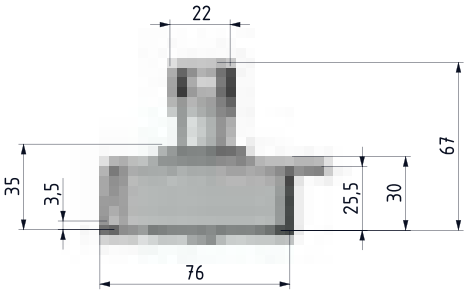

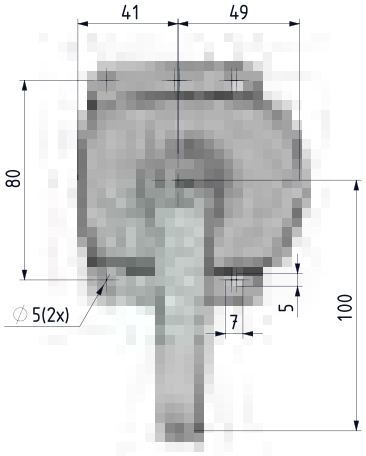



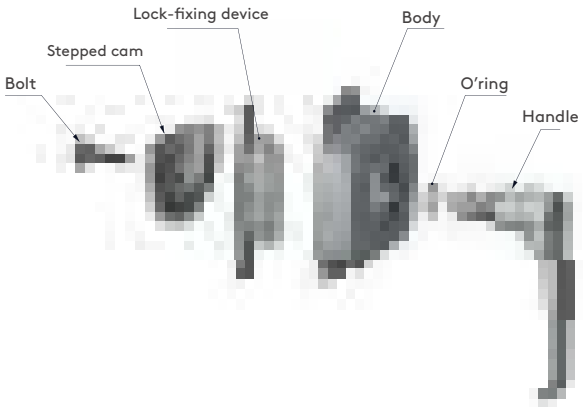

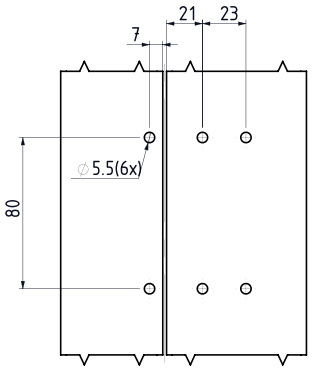

Cut out



- Outside locking system provides safety for pressurised doors

BODY: Zamak DIN-EN 1774-ZnAl4Cu1

HANDLE: Zamak DIN-EN 1774-ZnAl4C or PA6 GFR 30

CYLINDER	SPECIFICATIONS	DD
	No Cylinder	00
	Keyed alike (Stainless steel dust cap)	03
	Keyed differ (Stainless steel dust cap)	32
	Euro key (5333)	05
	CH751 (Stainless steel dust cap)Euro key (5333)	07

MATERIAL	M	FINISH	F
Zamak	1	Chrome plated	1
		Black coated	2
Plastic	2	No finish	0

Group Code	Handle	Body		Handle		Cylinder
612	111	1	2	M	F	DD

FUNCTIONAL LOCKING HINGE

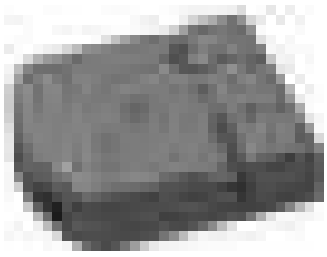



Assembly:

Functional locking hinge can be mounted left or right side of the door.

One side function as a hinge the other function as a lock

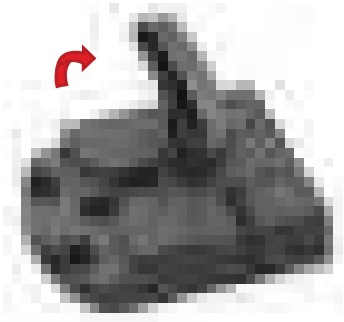

Right cover application:
right hinge - left lock







Left cover application:
left hinge - right lock

Removing the door
- Lift the handle
- Remove the door.

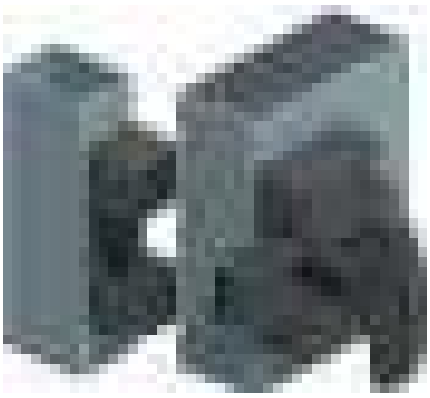

tel | + 90 212 721 44 44 fax | + 90 212 721 44 45

712 FUNCTIONAL LOCKING HINGE

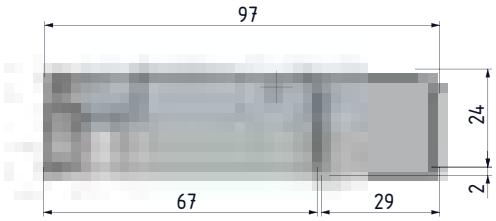

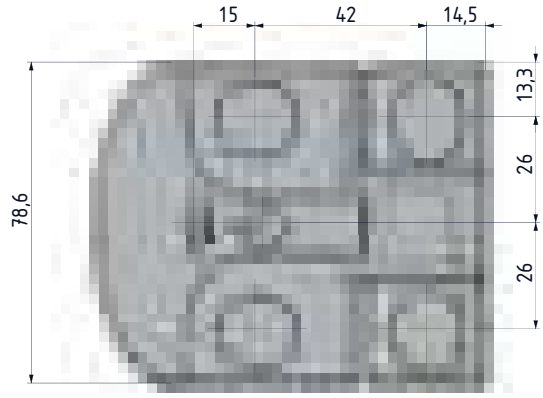



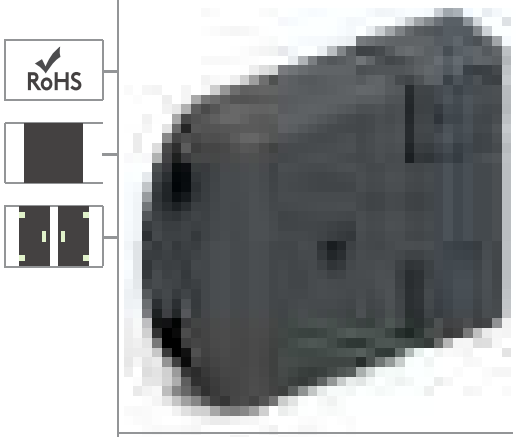

- Lock can also be used as hinge
- Door can be complately removed by unlocking the both products

MATERIAL

BODY:	Polyamide DIN-EN ISO 1043-1 PA6 GFR 30
HANDLE:	Polyamide DIN-EN ISO 1043-1 PA6 GFR 30
DRIVER:	Steel
CATCH PLATE:	Polyamide DIN-EN ISO 1043-1 PA6 GFR 30

⚠

This product can be produced as anti-bacterial with PA6 GFR 30% + 6% content. The raw material used has been tested in the DIN EN ISO 846 standard.

Group Code	Material	Finish
712	2	0

CLAMPS (3D) 078



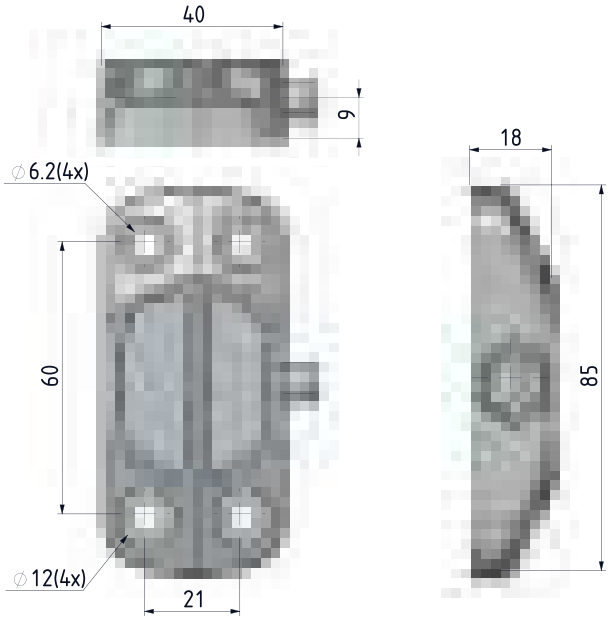

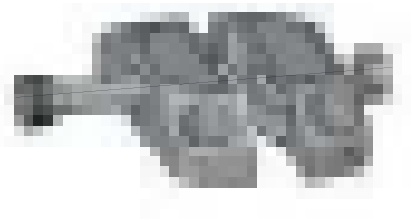

- Available in all die-cast zinc alloy
- 3D capability
- High mechanical resistance

MATERIAL

BODY:	Zamak DIN-EN 1774-ZnAl4Cu1 or PA6 GFR 30
BOLT:	Steel
NUT:	Steel

FINISH
Zinc plated or black coated

Note: Bolts are not supplied

This product can be produced as anti-bacterial with PA6 GFR 30% + 6% content. The raw material used has been tested in the DIN EN ISO 846 standard.



Group Code	Material	Finish
078	M	F

MATERIAL	M	FINISH	F
Zamak	1	Chrome plated	1
		Black coated	2
Plastic	2	No finish	0

tel | + 90 212 721 44 44 fax | + 90 212 721 44 45

462 BRIDGE CLAMP SYSTEM

V: 1



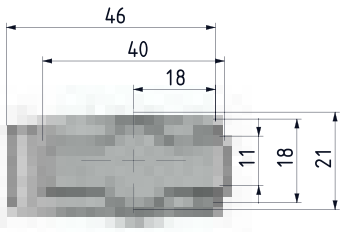

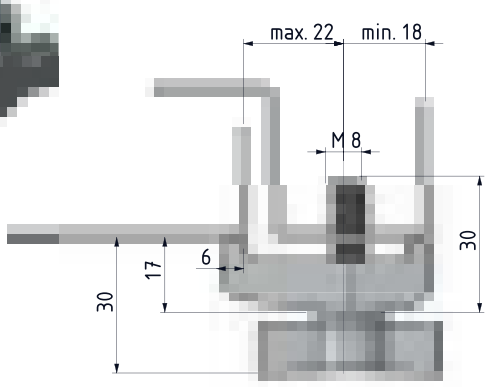

V: 2

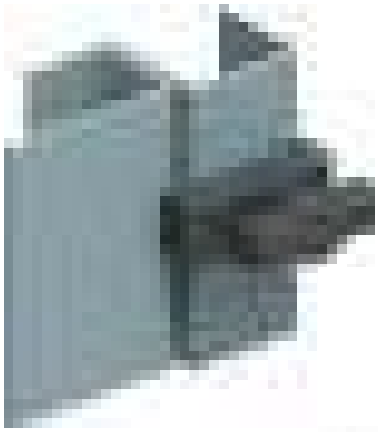

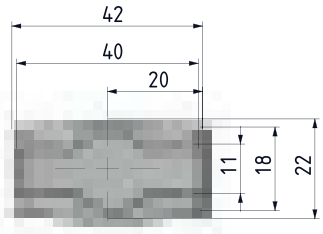

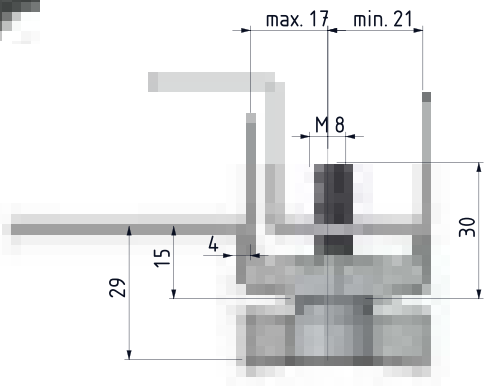

Group Code	Version
462	V

RoHS

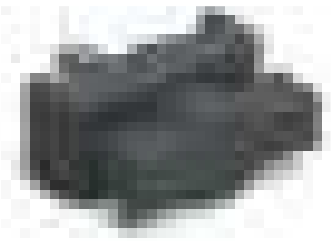

MATERIAL

HOUSING:	PA6 GFR 30
KNOB:	PA6 GFR 30
SCREW:	Steel

This product can be produced as anti-bacterial with PA6 GFR 30% + 6% content. The raw material used has been tested in the DIN EN ISO 846 standard.

PANEL LOCK WITH HEXAGONAL HEAD

075

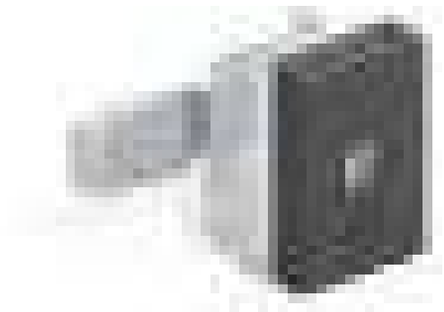

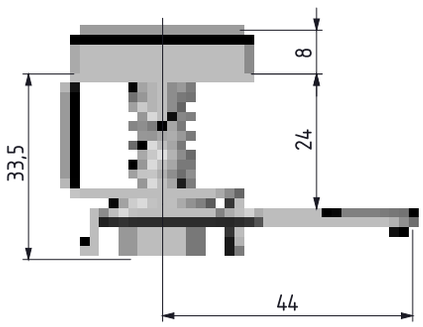

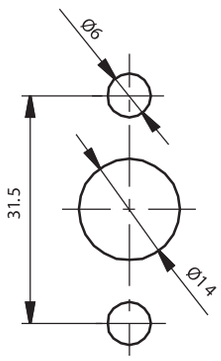

Cut out

MATERIAL

BODY:	Steel
CAM:	Steel
COVER:	Plastic

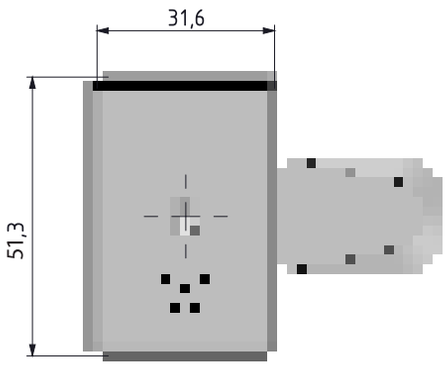

ALLEN KEY

669-66





Group Code	Door Direction
075	

DOOR DIRECTION	
Right hand	001
Left hand	002

tel | + 90 212 721 44 44 fax | + 90 212 721 44 45

3501 EMERGENCY STOP BUTTON

IP 65

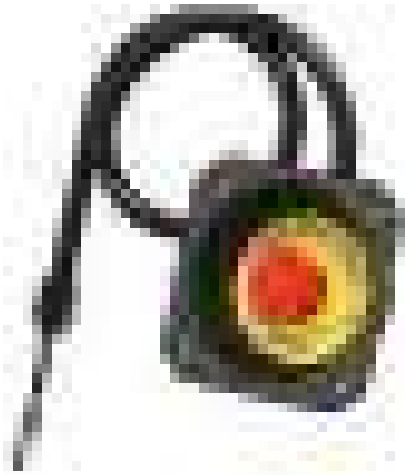

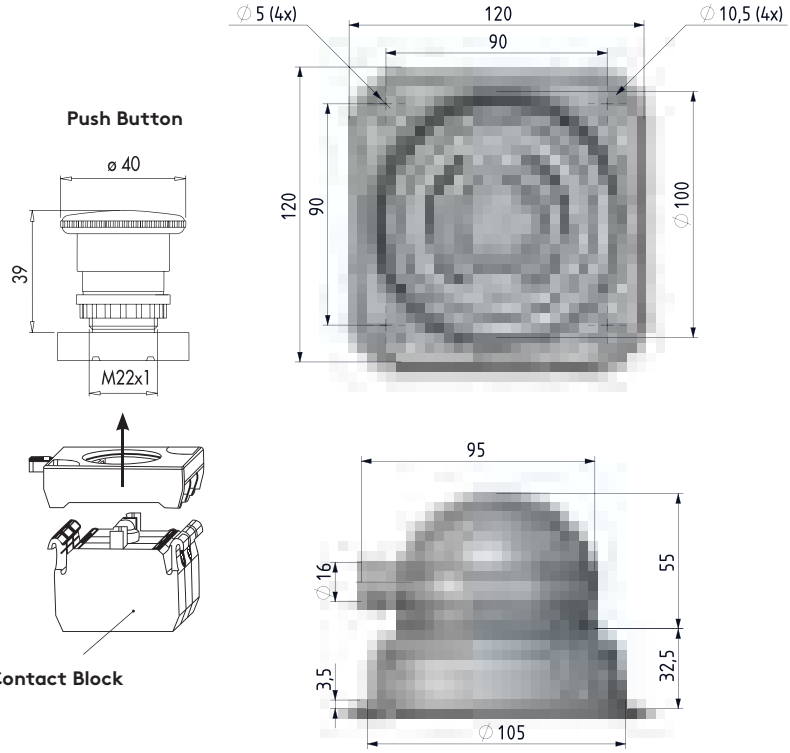

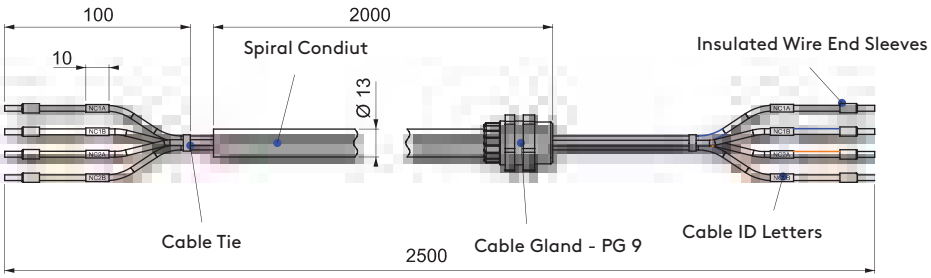

- Easy to install
- Different contact options (max. 3 contact)
- Standard wire length is 2.5 m Standard conduit length is 2 m

MATERIAL

BOWL:	Polyamid DIN-EN ISO 1043-1 PA6 GFR 30
PROTECTIVE COVER:	PVC
GASKET:	EPDM
SPIRAL CONDUIT:	PA6
CABLE GLAND:	PA66

BUTTON SPECIFICATIONS

Mechanical Life : 500.000 operations min.
Electrical Life : 100.000 operations min.
Operating Temperature : min./max. °C
-5/+40
Protection Degree : IP65
Operating Frequency : Without load 3000 oper./hour - At full load 1200 oper./hour
Rated Operating Voltage Ue : 230 V AC
Rated Operating Current Ie : 4 A
Insulation Voltage Ui : 300 V
Stroke Resistance Voltage Uimp : 2.5 kV
Standard Contact Material : AgNi
Insulation Resistance : 10 MΩ min. (500 V DC)
Dielectrical Strength :
Between body-contact: 2000 V AC
Open contact : 1500 V AC
Connection Cable Cross-Section : 1.5-2.5 mm 2
Standard : UL 508/TS EN 60947-5-1/ VDE0660/IEC 60393-1

Contact Block Type			Poduct Code
Normally Open	Normally Closed	LED	3501.V
-	1	-	**3501.1**
-	2	-	**3501.2**
1	1	-	**3501.3**
1	-	-	**3501.4**
2	-	-	**3501.5**
-	1	Fixed	**3501.1.1**
-	1	Flash	**3501.1.2**
-	2	Fixed	**3501.2.1**
-	2	Flash	**3501.2.2**
1	1	Fixed	**3501.3.1**
1	1	Flash	**3501.3.2**
1	-	Fixed	**3501.4.1**
1	-	Flash	**3501.4.2**
2	-	Fixed	**3501.5.1**
2	-	Flash	**3501.5.2**

COMPRESSION TRIGGER LOCK 077



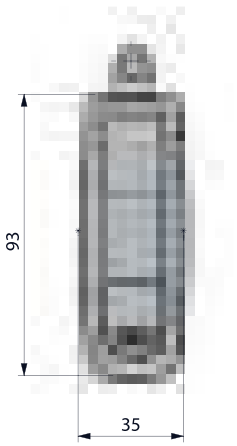

V: 1

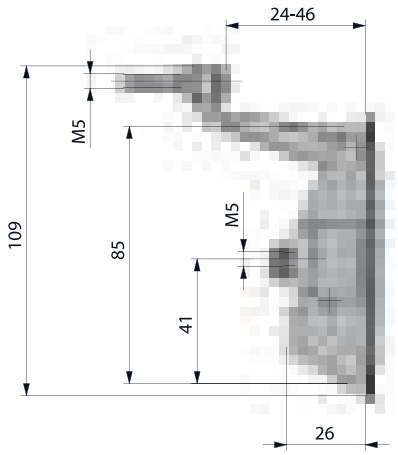

V: 2

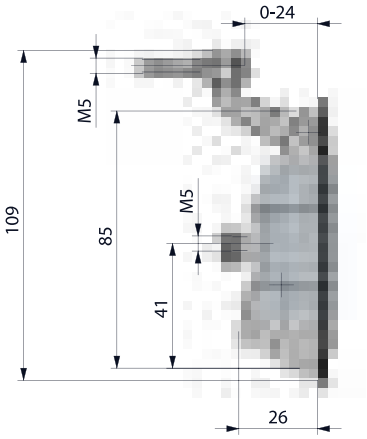

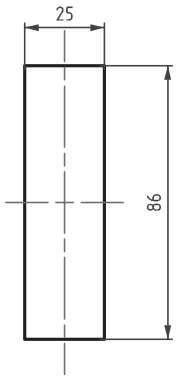

Cut out



- Flush trigger design
- Available with or without cylinder
- 0-24mm or 24-46mm adjustable grip range
- Suitable for panel thickness of ≤2mm
- Assemble lock with one fixing bracket

MATERIAL

BODY: Zamak DIN-EN 1774-ZnAl4Cu1
HANDLE: Zamak DIN-EN 1774-ZnAl4Cu1
FIXING BRACKET: Steel

SPECIFICATIONS	DD
No cylinder	00
Keyed alike (Stainless steel dust cap)	03
Keyed differ (Stainless steel dust cap)	32
Euro key (5333)	05
CH751 (Stainless steel dust cap)	07

FINISH	F
Chrome plated	1
Black coated	2

Group Code	Version	Finish	Cylinder
077	V	F	DD

tel | + 90 212 721 44 44 fax | + 90 212 721 44 45

177 COMPRESSION TRIGGER LOCK

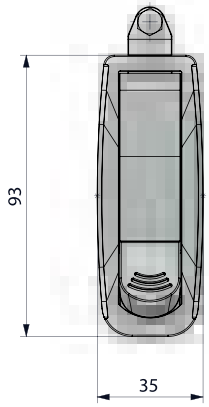



V: 1

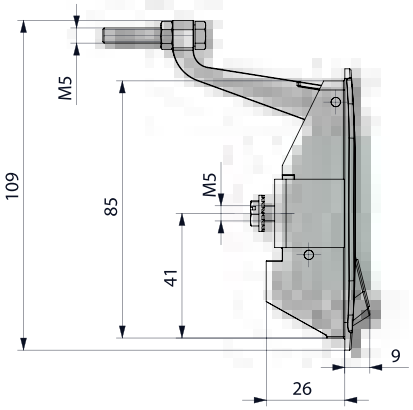

V: 2

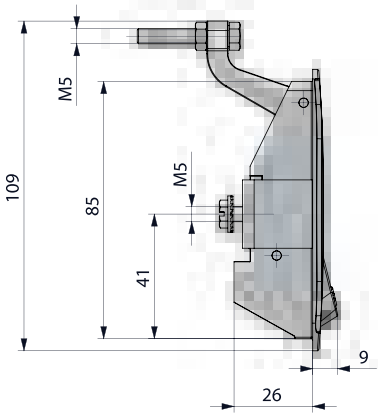

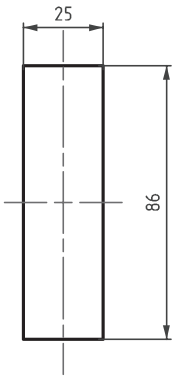

Cut out

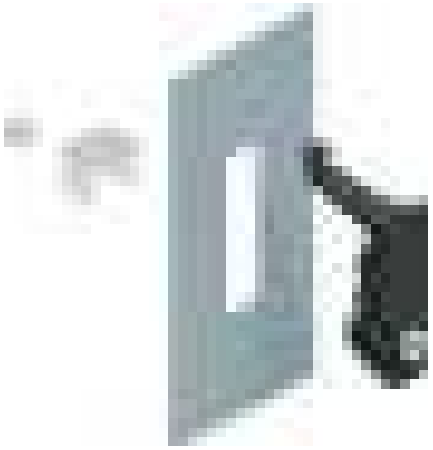

- Raised trigger design
- Available with or without cylinder
- 0-24mm or 24-46mm adjustable grip range
- Suitable for panel thickness of ≤2mm
- Assemble lock with one fixing bracket

MATERIAL

BODY: Zamak DIN-EN 1774-ZnAl4Cu1

HANDLE: Zamak DIN-EN 1774-ZnAl4Cu1

FIXING BRACKET: Steel

SPECIFICATIONS	DD
No cylinder	00
Keyed alike (Stainless steel dust cap)	03
Keyed differ (Stainless steel dust cap)	32
Euro key (5333)	05
CH751 (Stainless steel dust cap)	07

FINISH	F
Chrome plated	1
Black coated	2

DRIVER	
Slot	
DD	
42	

Group Code	Version	Finish	Cylinder Driver
177	V	F	DD

COMPRESSION TRIGGER LOCK 377

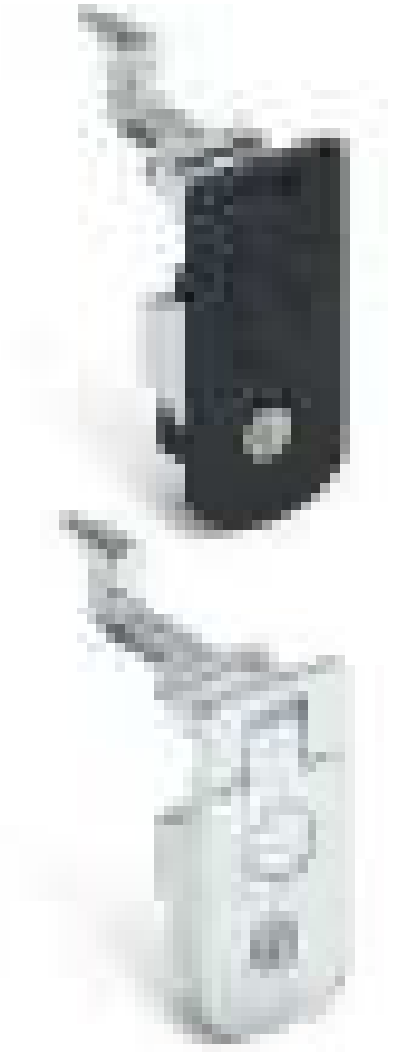

RoHS

IP 65

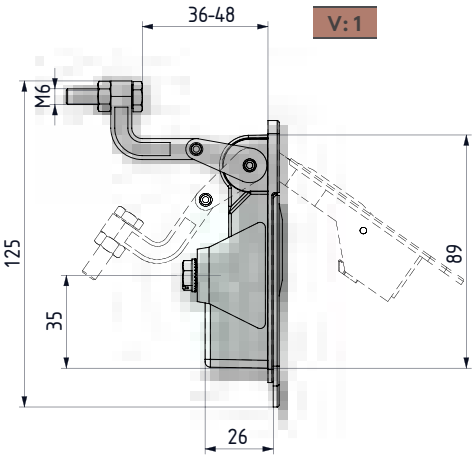

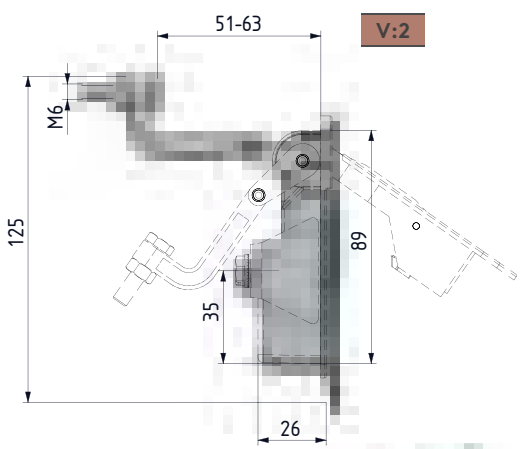

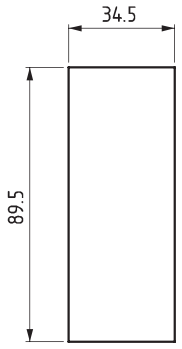

Cut out

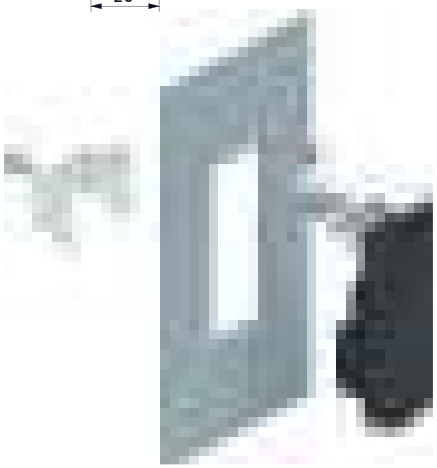

- Available with or without cylinder
- 36 - 48 mm or 51 -63 mm adjustable grip range
- Suitable for maximum 2 mm door thickness
- Assemble by only one bracket

MATERIAL

BODY: Zamak DIN-EN 1774-ZnAl4Cu1

HANDLE: Zamak DIN-EN 1774-ZnAl4Cu1

FIXING BRACKET: Steel

CYLINDER	DD
No cylinder	00
Keyed alike (Stainless steel dust cap)	03
Keyed differ (Stainless steel dust cap)	32
Euro key (5333)	05
CH751 (Stainless steel dust cap)	07

FINISH	F
Chrome plated	1
Black coated	2

DRIVER	
Slot	
DD	
42	

Group Code	Version	Finish	Cylinder
377	V	F	DD

tel | + 90 212 721 44 44 fax | + 90 212 721 44 45

477 COMPRESSION TRIGGER LOCK

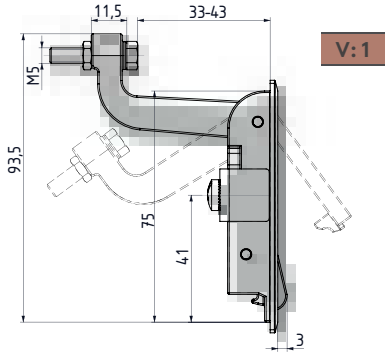

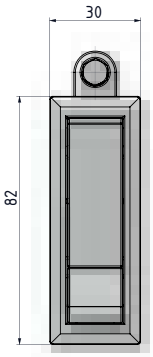

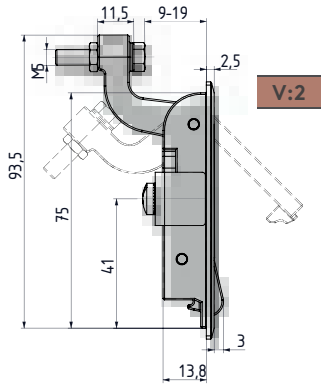

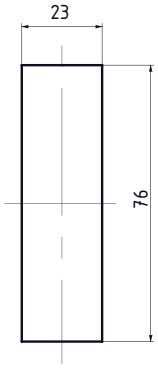

Cut out



NEW

RoHS

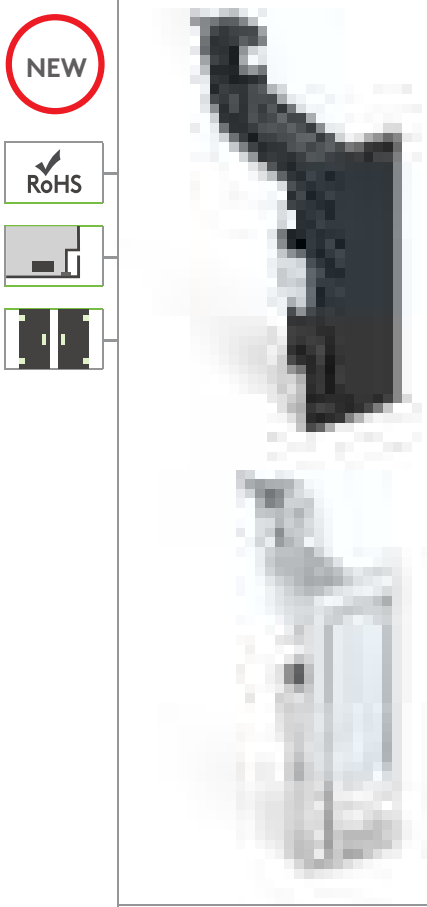

- Without cylinder application
- 9 - 19 mm or 33 -43 mm adjustable grip range.
- Suitable for maximum 2 mm door thickness
- Assemble by only one bracke

MATERIAL

BODY: Zamak DIN-EN 1774-ZnAl4Cu1

HANDLE: Zamak DIN-EN 1774-ZnAl4Cu1

FIXING BRACKET: Steel

FINISH	F
Chrome plated	1
Black coated	2

Group Code	Version	Finish	Cylinder
477	V	F	00

LIFT-AND-TURN LOCK

170

ALL IN METAL



- For cabinets that require better sealing under vibrating conditions
- Provides 5 mm of compression
- Provides noise isolation
- Three cam alternatives available

MATERIAL

HOUSING:	Zamak DIN-EN 1774-ZnAl4Cu1
HANDLE:	Zamak DIN-EN 1774-ZnAl4Cu1
CAM:	Steel

FINISH
Chrome plated or black coated

V:1

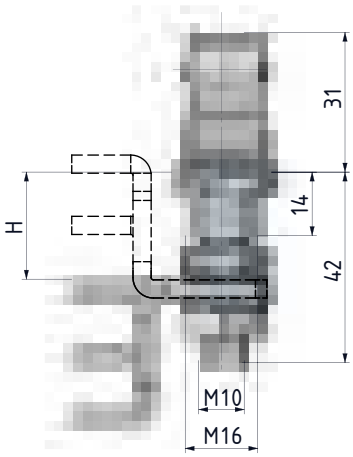

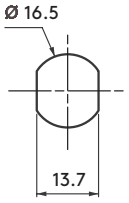

Cut out

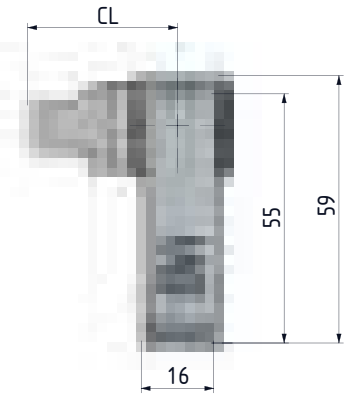

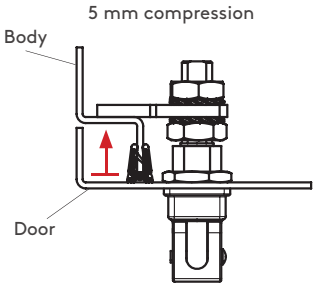

Closed position

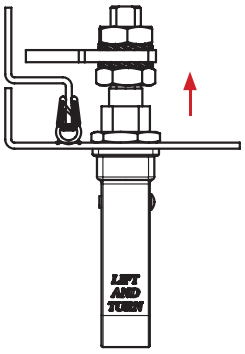

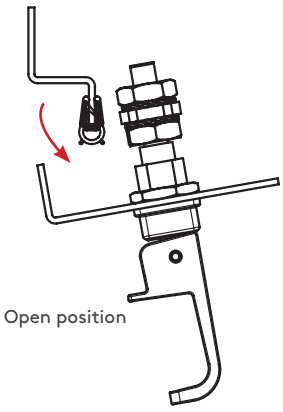

Open position

tel | + 90 212 721 44 44 fax | + 90 212 721 44 45

170 LIFT-AND-TURN LOCK

ALL IN METAL

V: 2

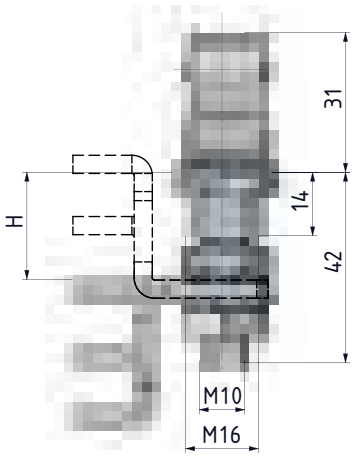

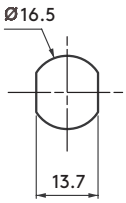

Cut out

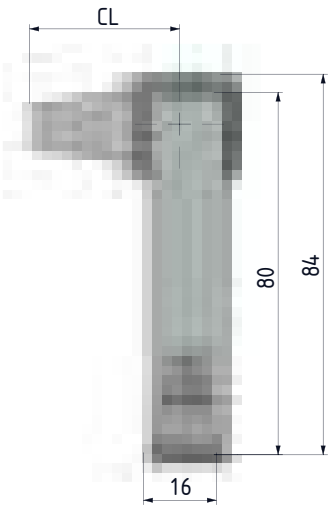



- For cabinets that require better sealing under vibrating conditions
- Lock provides 5 mm of compression
- Provides noise isolation
- Three cam alternatives available

MATERIAL

HOUSING:	Zamak DIN-EN 1774-ZnAl4Cu1
HANDLE:	Zamak DIN-EN 1774-ZnAl4Cu1
CAM :	Steel

FINISH

Chrome plated or black coated

CAM	CC	CH	CL	H GRIP MIN CAM	H GRIP MAX CAM
1	01	0	33	22.5	30
2	02	14	33	8.5	44
3	03	27.5	33	0	57.5

FINISH	F
Chrome plated	1
Black coated	2

Group Code	Version	Material	Finish	Cam
170	V	1	F	CC

LIFT-AND - TURN LOCK

070



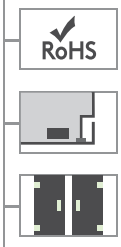

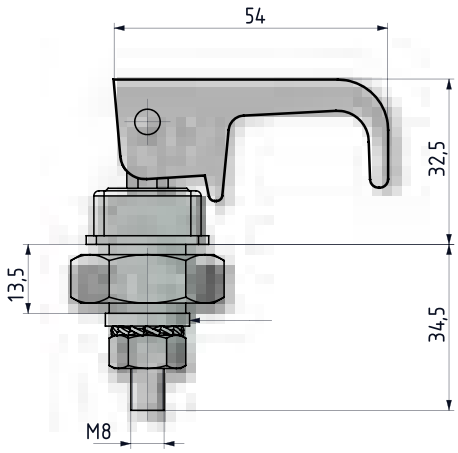

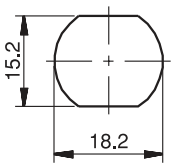

Cut out

- Suitable for steel and polyester panels
- Provides 5 mm of compression

MATERIAL

BODY: Polyamide DIN-EN ISO 1043-1 PA6 GFR 30

CAM: Steel



tel | + 90 212 721 44 44 fax | + 90 212 721 44 45

072 FUNCTIONAL LOCK

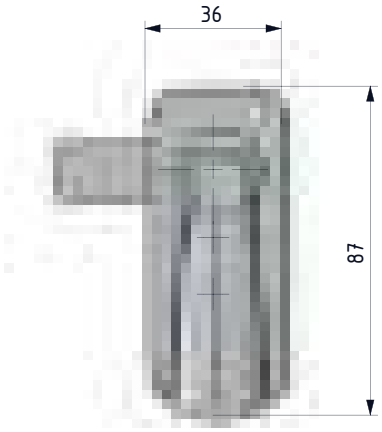

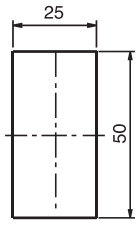

Cut out

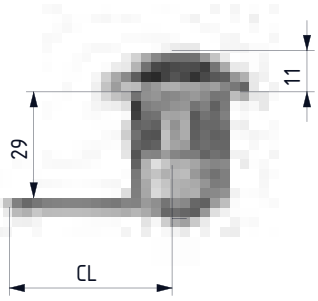

Steel cam

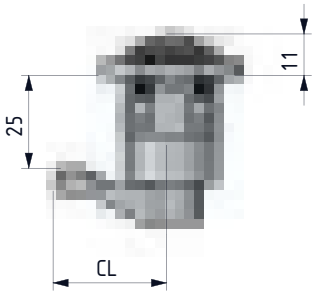

Plastic cam
CC: 80

IP 54

RoHS



- Suitable for steel and polyester panels
- Standard cut out for both versions
- Clip fixing version suitable for panels with thickness of between 0.8 mm and 2 mm

MATERIAL

BODY:	Polyamide DIN-EN ISO 1043-1 PA6 GFR 30
CAM:	Steel or PA6 GFR 30

V: 1

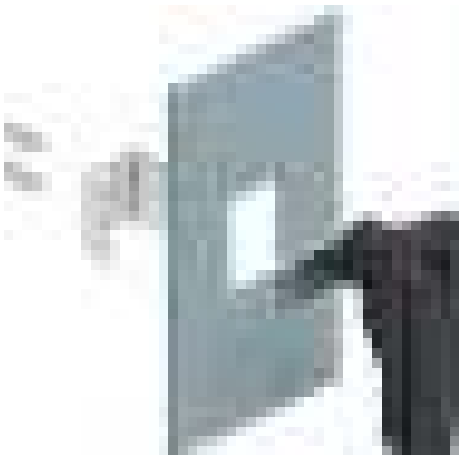

V: 2

Clip-in fixing

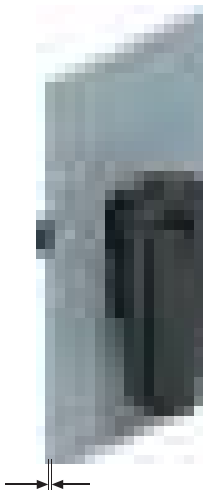

DT	
Min	Max
0.8mm	2mm

DT (DOOR THICKNESS)

Group Code	Version	Cam	Door Direction
072	V	CC	

DOOR DIRECTION	
Right hand	001
Left hand	002

For cams please check page: 175 (CAM-1)

SWELL LOCK

270

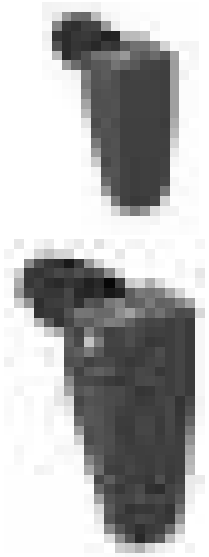

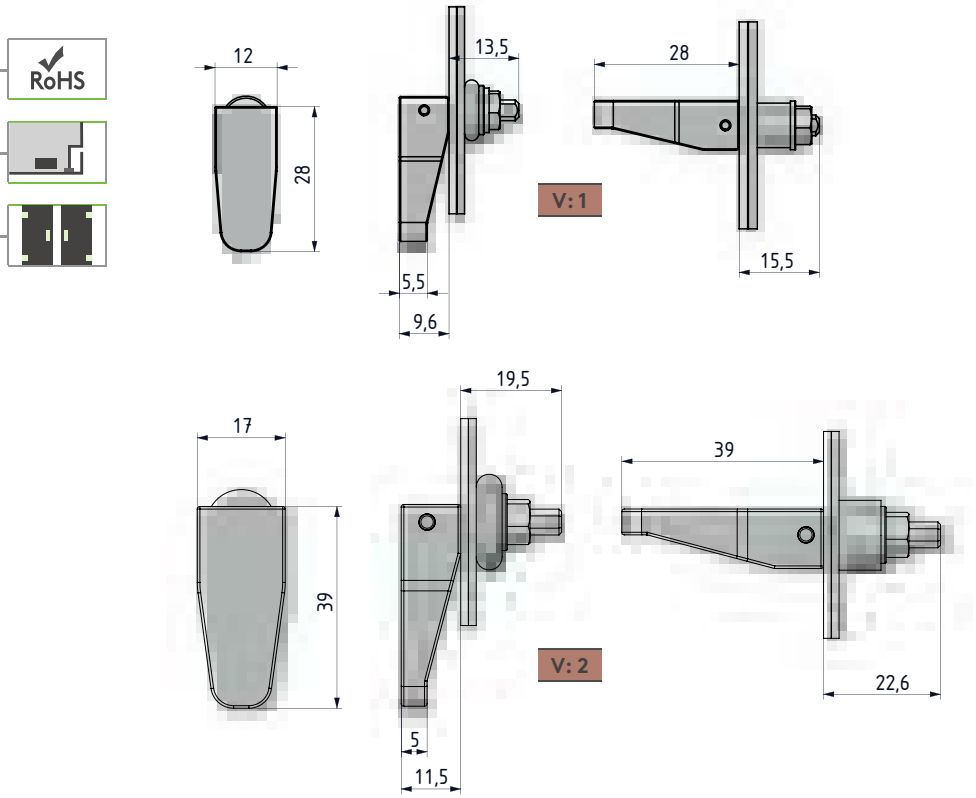

- Used for the cabinets that require better under vibration conditions.
- It is suitable with special cut out for different frame thickness.

MATERIAL

HANDLE: Polyamide DIN-EN ISO 1043-1 PA6 GFR 30
WASHER: PA66
NUT : PA66
BUSHING : SBR Rubber

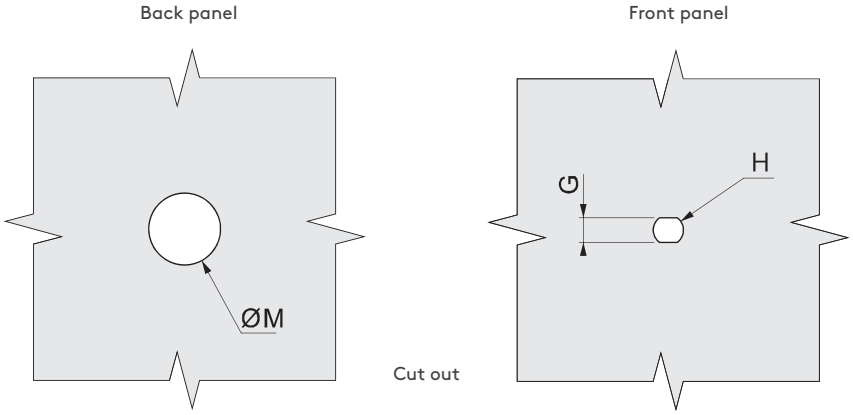

VERSION	G +0.1 -0.0	H +0.1 -0.0	FRAME THICKNESS	CUT OUT ØM
1	3.3	4.1	3.2	9.5
2	4.5	5.8	Up to 3.2	13.5
			3.2 - 4.8	14

Group Code	Material	Finish	Version
270	2	0	V

tel | + 90 212 721 44 44 fax | + 90 212 721 44 45

270 SWELL LOCK

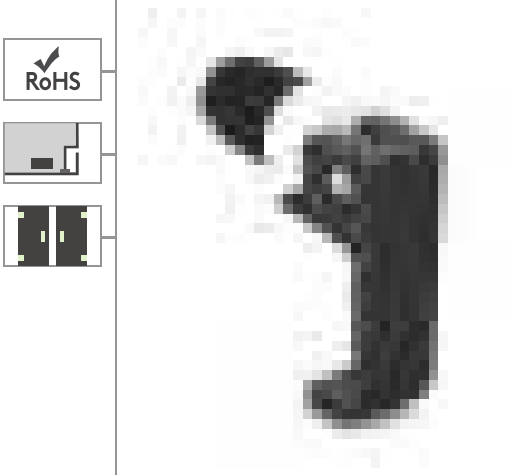

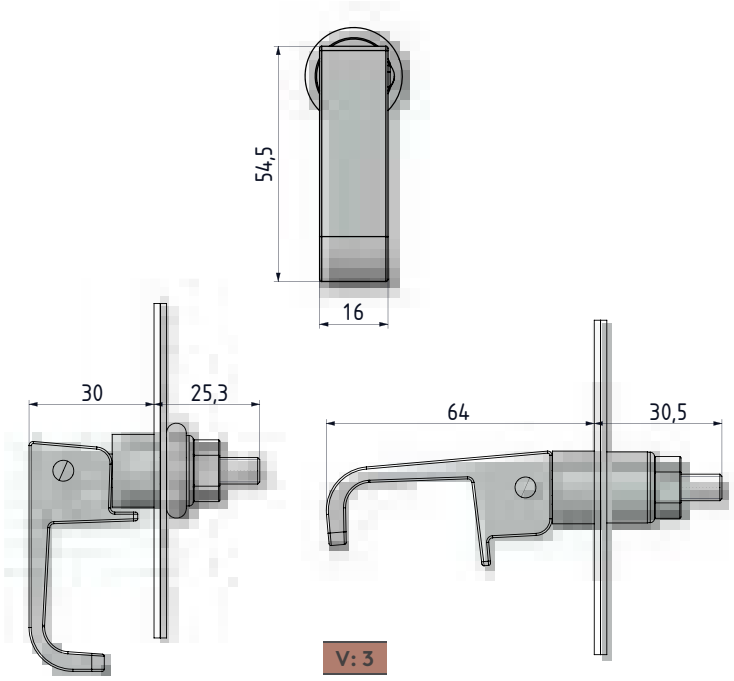

- Used for the cabinets that require better under vibration conditions.
- It is suitable with special cut out for different frame thickness.

MATERIAL

HANDLE:	Zamak DIN-EN 1774-ZnAl4Cu1
WASHER:	PA66
NUT :	PA66
BUSHING :	SBR Rubber

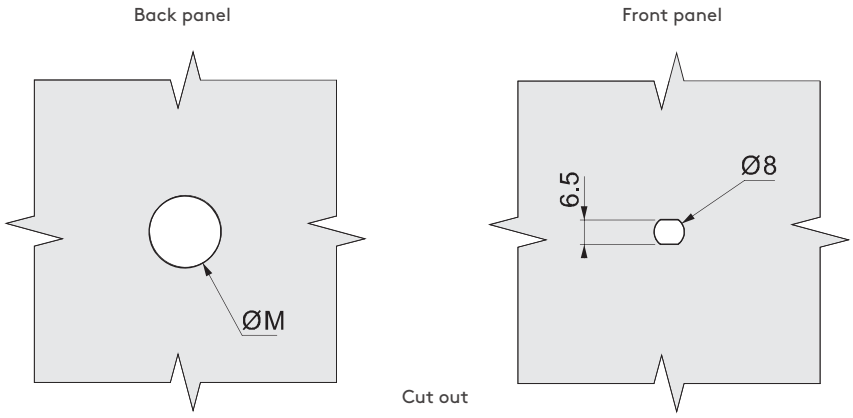

FRAME THICKNESS	CUT OUT ØM
1.2-3.2	**19**
3.2-4.8	**19.5**
4.8-6.4	**20**
6.4 and up	**20.5**

Group Code	Material	Finish	Version
270	1	2	V

ROTARY LATCH (MINI) — 2800

BOTTOM

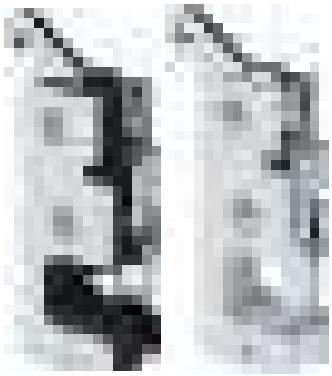

RoHS

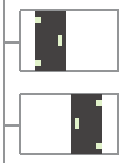

Bumper Version

Dimensions are same as standard version except as shown

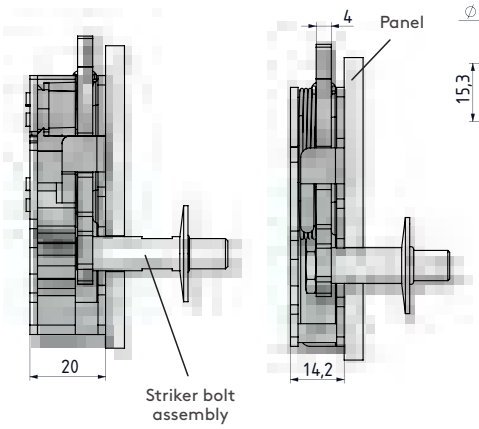

Standard Version

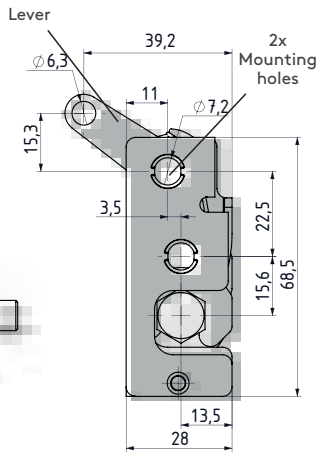

(Left hand application)

ROTARY LATCH (MINI)

TOP



Bumper Version

Dimensions are same as standard version except as shown

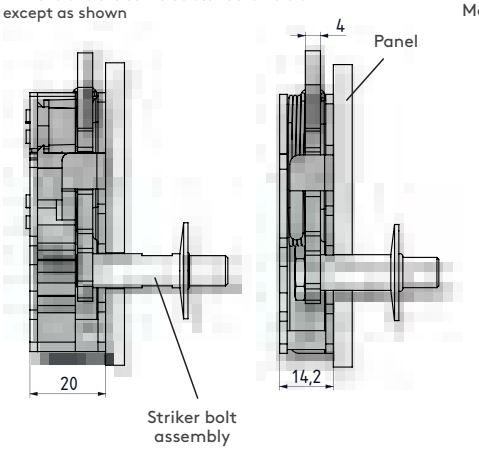

Standard Version

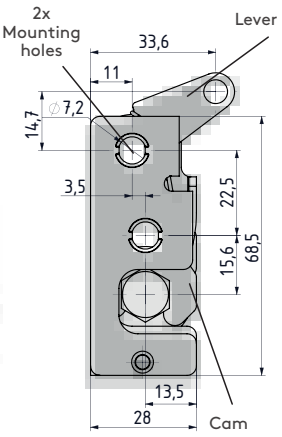

(Left hand application)

- Six different lever type
- Single or two stage actuation type
- Bumper version for vibrating conditions

MATERIAL
BODY: Steel
BUMPER: PA6

FINISH
Zinc Plated

LEVER TYPE	LT
Bottom	1
Top	2

MOUNTING TYPE	MT
Ø7,2	1
M6	2
1/4"	3

ACTUATION	A
Single	1
Two	2

VERSION	V
Standard	1
Bumper	2

DOOR DIRECTION	
Right hand	001
Left hand	002

Group Code	Version	Lever Type	Mounting Type	Actuation	Door Direction
2800	V	LT	MT	A	

For striker bolts check page : 153
For cables & accessories check page: 158-159
For locks check page: 192 - 271

tel | + 90 212 721 44 44 fax | + 90 212 721 44 45

2800 ROTARY LATCH (MINI)

IN LINE

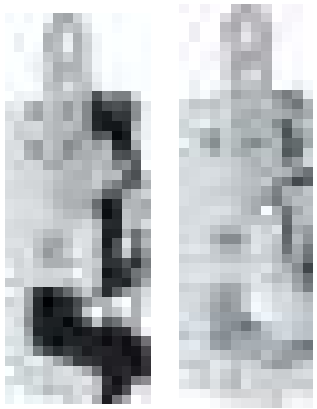

Bumper Version

Dimensions are same as standard version except as shown

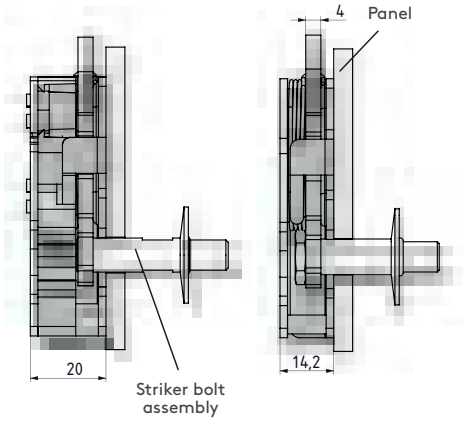

Standard Version

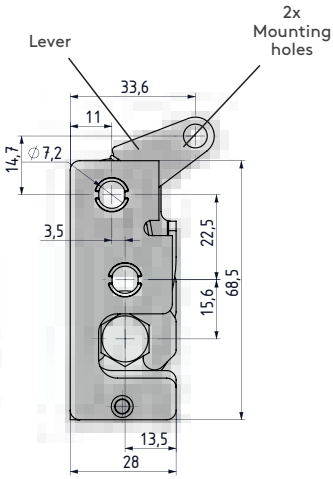

(Left hand application)

ROTARY LATCH (MINI)

HAND ACTUATION

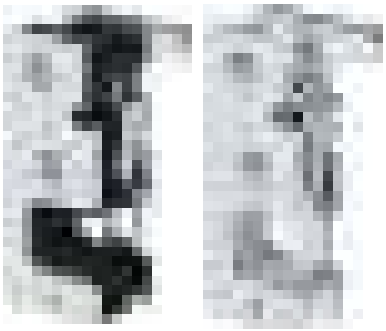

Bumper Version

Dimensions are same as standard version except as shown

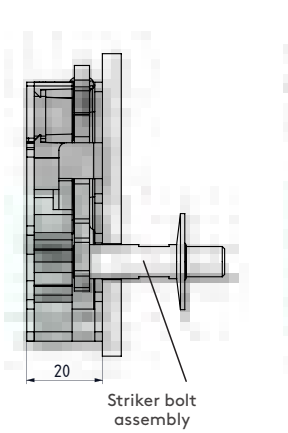

Standard Version

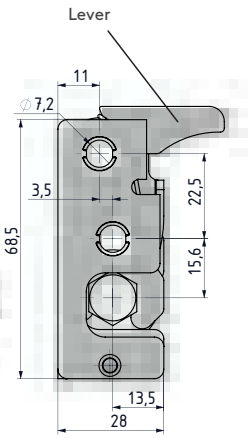

(Left hand application)

- Six different lever type
- Single or two stage actuation type
- Bumper version for vibrating conditions

MATERIAL
BODY: Steel
BUMPER: PA6

FINISH
Zinc Plated

LEVER TYPE	LT
In Line	3
Hand Actuation	4

MOUNTING TYPE	MT
Ø7,2	1
M6	2
1/4"	3

ACTUATION	A
Single	1
Two	2

VERSION	V
Standard	1
Bumper	2

DOOR DIRECTION	
Right hand	001
Left hand	002

Group Code	Version	Lever Type	Mounting Type	Actuation	Door Direction
2800	V	LT	MT	A	

For striker bolts check page : 153
For cables & accessories check page: 158-159
For locks check page: 192 - 271

ROTARY LATCH (MINI) — 2800

PERPENDICULAR



RoHS

Bumper Version

Dimensions are same as standard version except as shown

STANDART VERSION

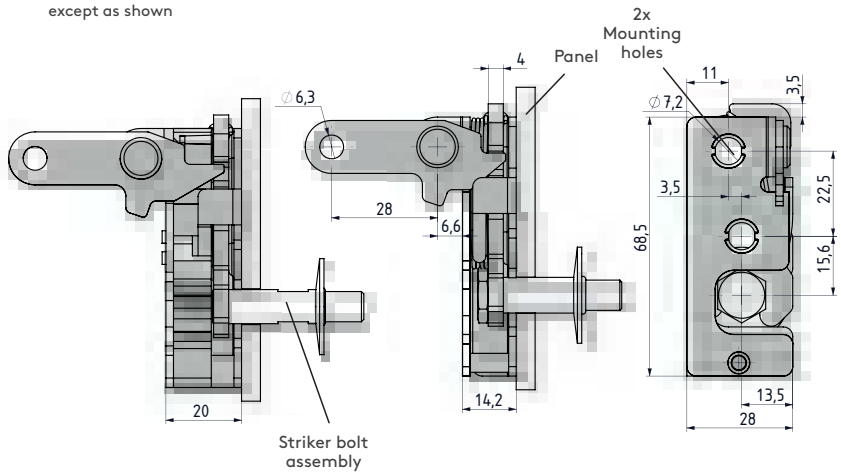

(Left hand application)

ROTARY LATCH (MINI)

TWO POINT

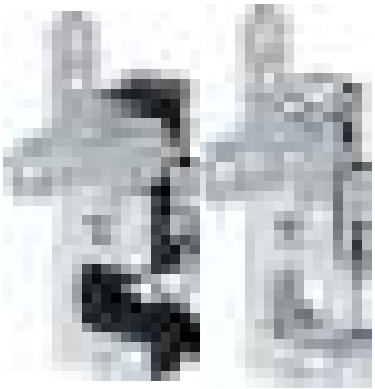

Bumper Version

Dimensions are same as standard version except as shown

STANDART VERSION

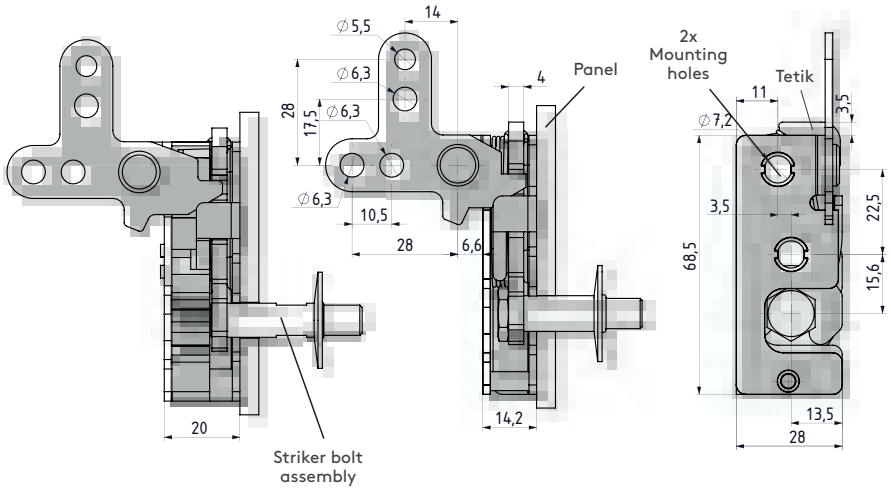

(Left hand application)

- Six different lever type
- Single or two stage actuation type
- Bumper version for vibrating conditions

MATERIAL
BODY: Steel
BUMPER: PA6

FINISH
Zinc Plated

LEVER TYPE	LT
Perpendicular	5
Two Point	6

MOUNTING TYPE	MT
Ø7,2	1
M6	2
1/4"	3

ACTUATION	A
Single	1
Two	2

VERSION	V
Standard	1
Bumper	2

DOOR DIRECTION	
Right hand	001
Left hand	002

Group Code	Version	Lever Type	Mounting Type	Actuation	Door Direction
2800	V	LT	MT	A	

For striker bolts check page : 153
For cables & accessories check page: 158-159
For locks check page: 192 - 271

tel | + 90 212 721 44 44 fax | + 90 212 721 44 45

SB.1 STRIKER BOLT (MINI)

Standard Version

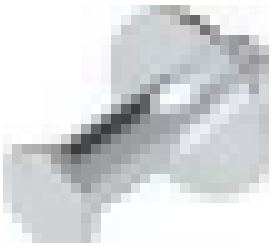

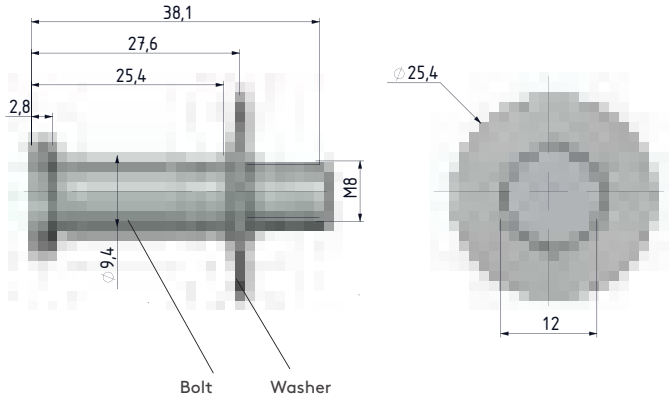

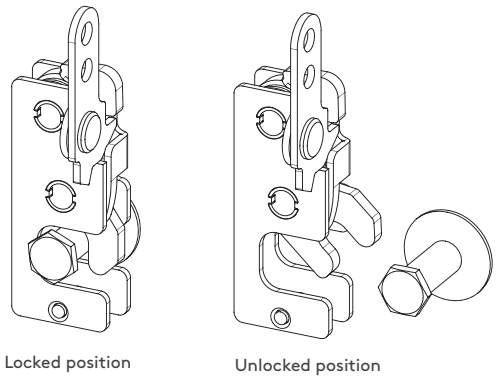

MATERIAL
BODY: Steel

FINISH
Zinc Plated

SB.2 STRIKER BOLT (MINI)

Bumper Version

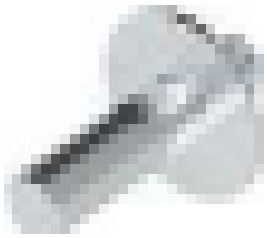

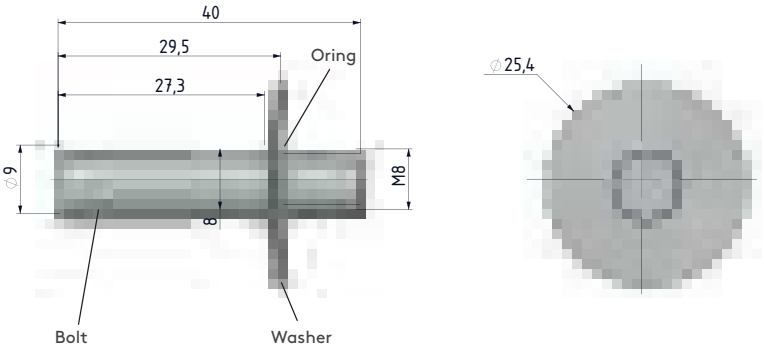

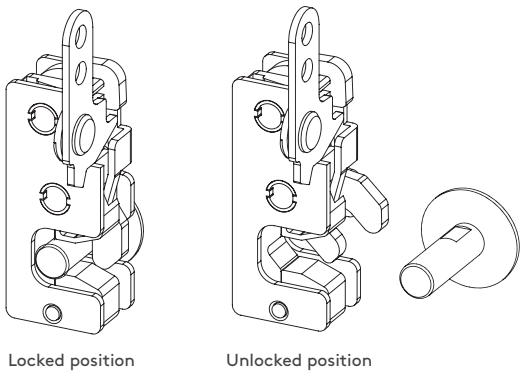

MATERIAL
BODY: Steel

FINISH
Zinc Plated

ROTARY LATCH (LARGE) — 2810

BOTTOM

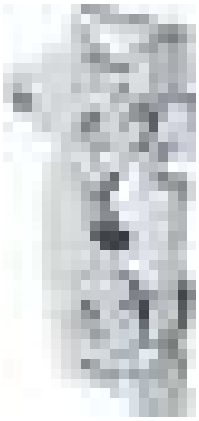

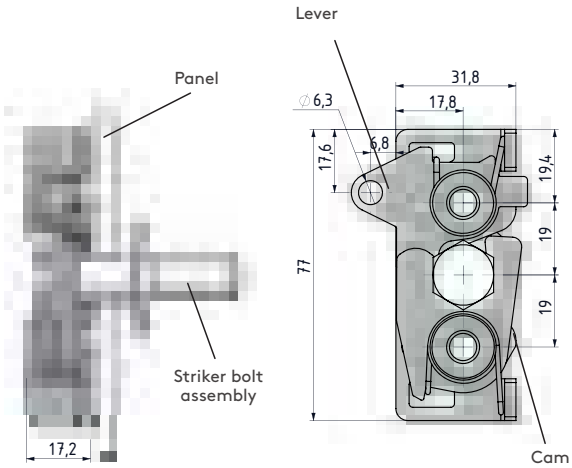

(Left hand application)

ROTARY LATCH (LARGE)

PERPENDICULAR

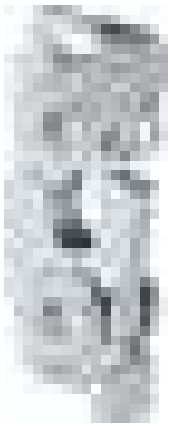

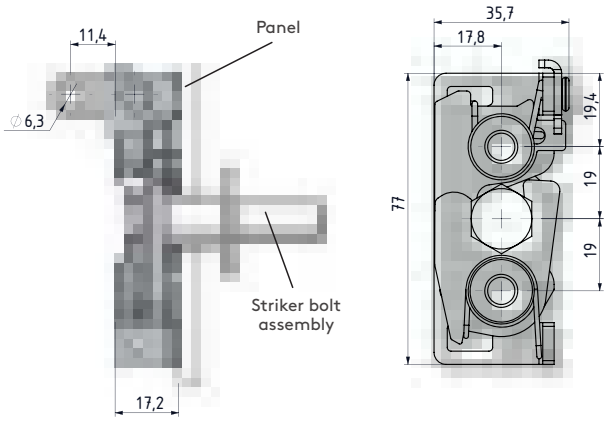

(Left hand application)

- Three different lever type
- Two stage actuation type

MATERIAL
BODY: Steel

FINISH
Zinc Plated

LEVER TYPE	LT
Top	1
Perpendicular	2
Two Point	3

MOUNTING TYPE	MT
Ø7,2	1
M6	2
1/4"	3

Group Code	Lever Type	Mounting Type	Door Direction
2810	LT	MT	

For striker bolts please check page :155
For cables & accessories check page: 158-159
For locks check page: 192 - 271

tel | + 90 212 721 44 44 fax | + 90 212 721 44 45

2810 ROTARY LATCH (LARGE)

TWO POINT

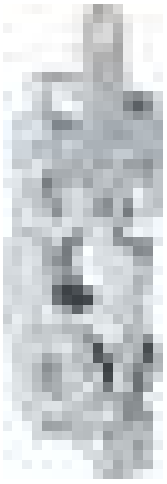

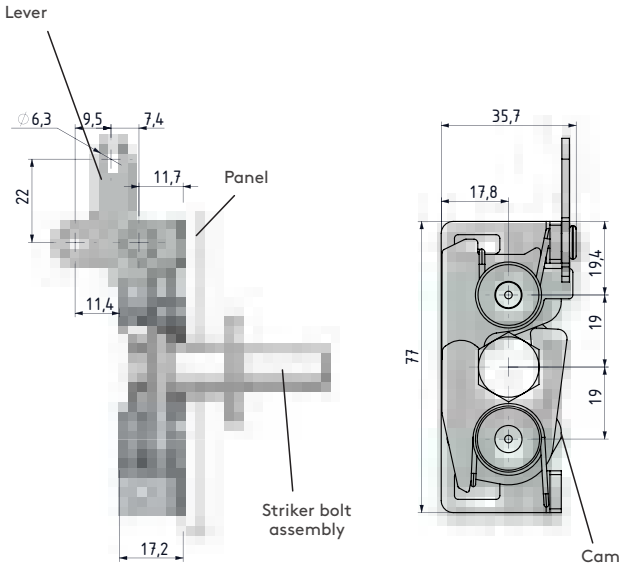

SB.3 STRIKER BOLT (LARGE)

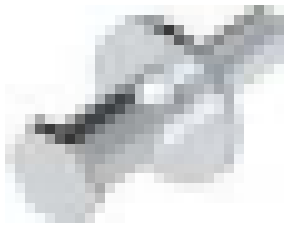

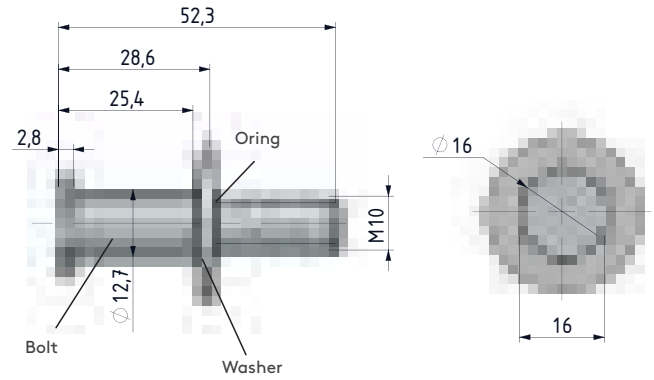

MATERIAL
BODY: Steel

FINISH
Zinc Plated

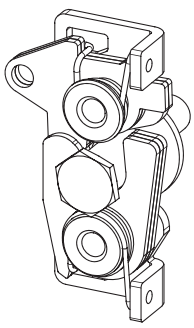

Locked position

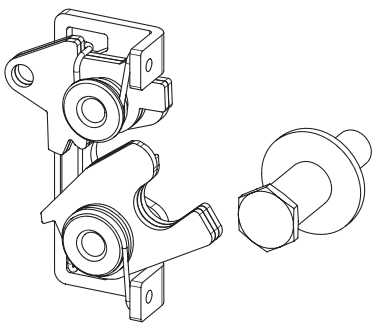

Unlocked position

For cables & accessories check page: 158-158
For locks check page: 192 - 271

ELECTRONIC ROTARY LATCH 3331



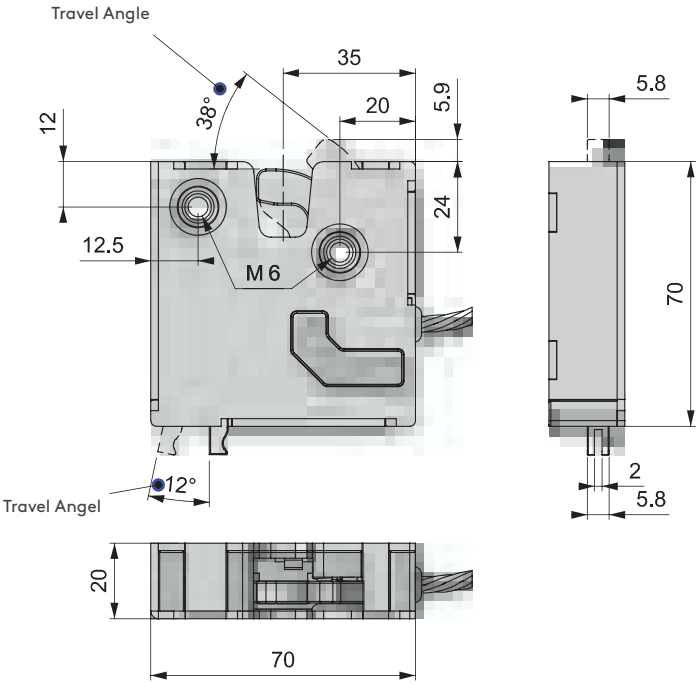

- Push to Close
- Mechanical override
- Stainless steel cam and trigger
- Integrated microswitch for lock status
- Microprocessor controlled gear motor
- Compatible with access control systems

MATERIALS

BODY: Steel and PA6 GFR 30
CAM: Stainless Steel

TECHNICAL SPECIFICATIONS

Operating Voltage : 9 - 24 Volt
Cable Length : 150 mm
Current : Max 500 MA

PIN	COLOR	VALUE
Pin 1	Black	GND
Pin 2	Green	12 Volt DC
Pin 3	Orange	Signal
Pin 4	Red	Microswitch COM
Pin 5	Blue	Microswitch NO
Pin 6	Brown	Microswitch NC

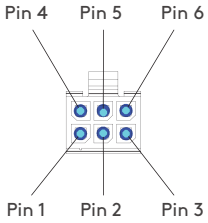



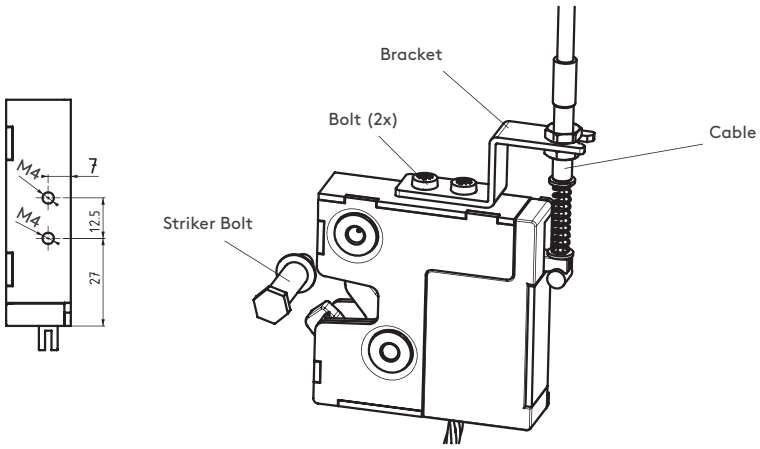

Group Code	Mounting Type
3331	MT

MOUNTING TYPE	MT
Ø7,2	1
M6	2
1/4"	3

tel | + 90 212 721 44 44 fax | + 90 212 721 44 45

SB.4 STRIKER BOLT

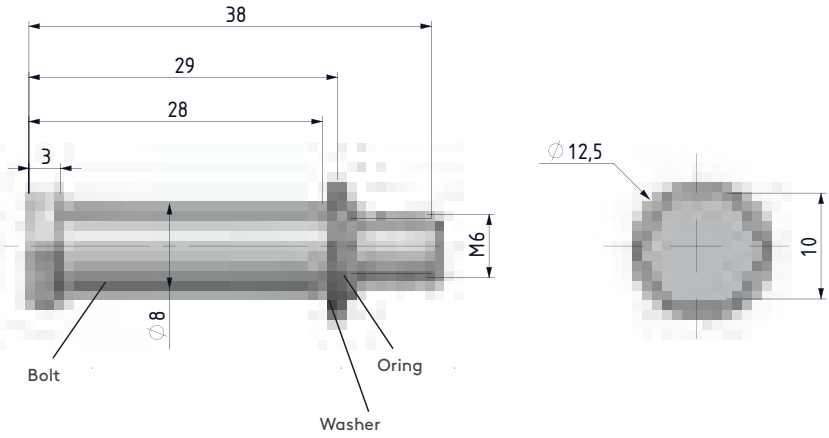

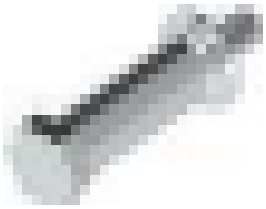

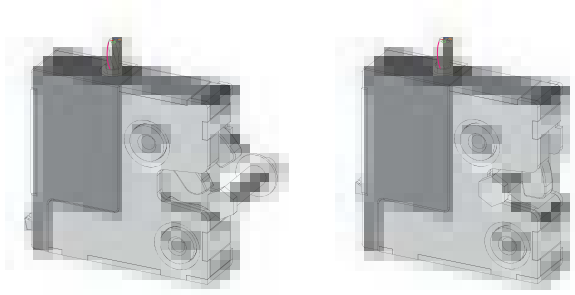

Locked position

Unlocked position

MATERIAL
BODY: Steel

FINISH
Zinc Plated

321.03.068 CABLE MOUNTING BRACKET

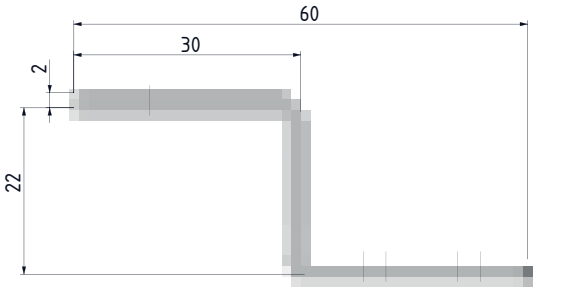

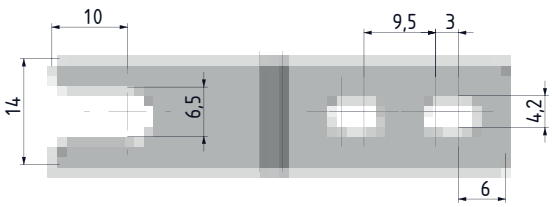



MATERIAL
BODY: Steel

FINISH
Zinc Plated

For cables & accessories check page: 158-159
For locks check page: 192 - 271

RETAINER CLIP

(Cable Accessory)



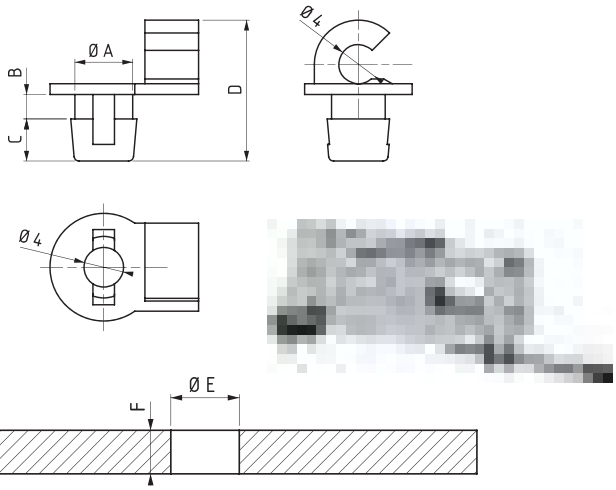

A	B	C	D	E	F	TRIGGER LEVER	PRODTUCT CODE
5.9	2.5	4.3	14.4	6.3	2	Perpendicular, In line, Two point	**320.02.193**
5.9	4.5	4.3	16.4	6.3	4	Top, Bottom	**320.02.194**

MATERIAL
PA6

CABLE MOUNTING BRACKET

(Cable Accessory)

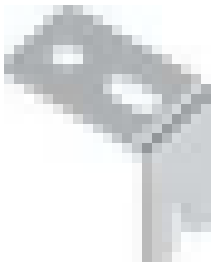

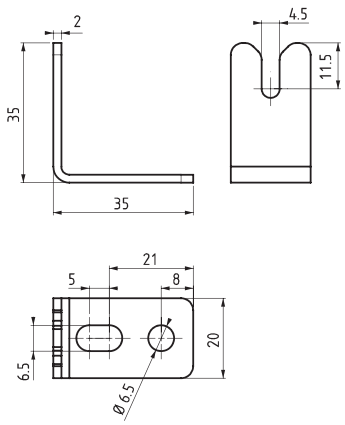

PRODUCT CODE
321.03.044

MATERIAL
BODY: Steel

FINISH
Zinc Plated

ACTUATOR CAM



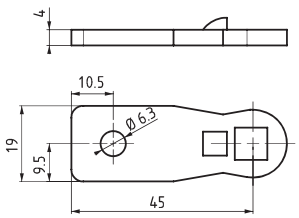

PRODUCT CODE	CC	CH	CL
30403779Y	98	0	45

MATERIAL
BODY: Steel

FINISH
Zinc Plated

For any actuator cam please contact to sales team

tel | + 90 212 721 44 44 fax | + 90 212 721 44 45

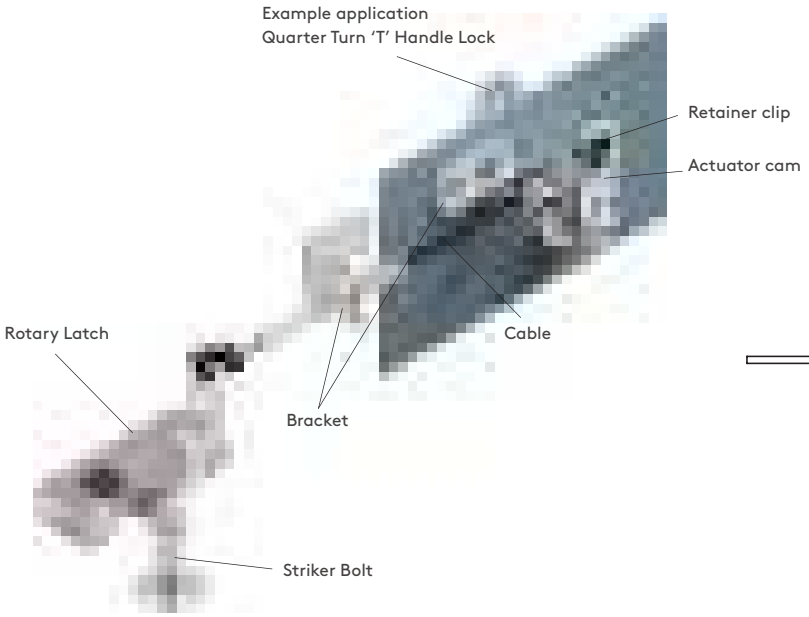

EXAMPLE APPLICATION

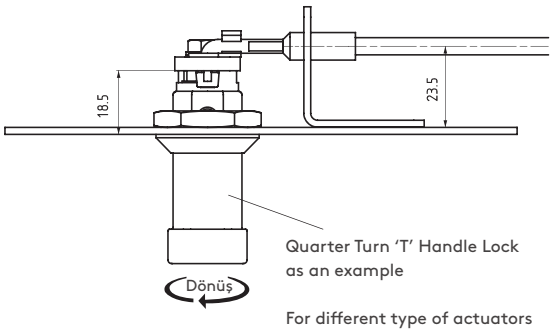

Quarter Turn 'T' Handle Lock as an example

For different type of actuators please contact to Essentra

V: 1

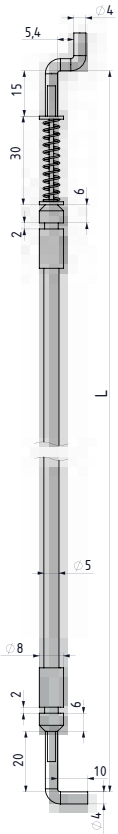

Suitable for Rotary Latch Mini and Large applications without Retainer Clip

V: 2

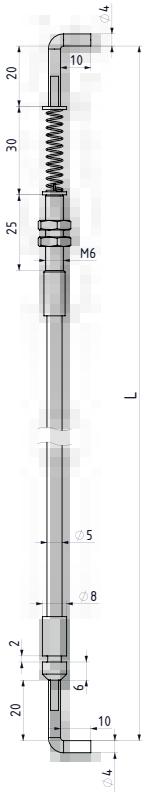

Suitable for Rotary Latch Mini and Large applications with Retainer Clip

V: 3

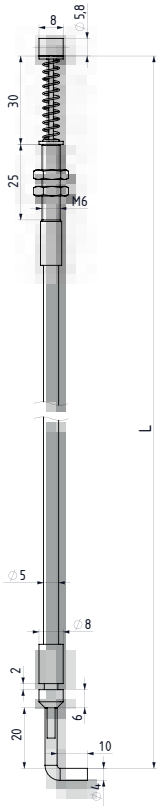

Only for Electronic Rotary Latch

2801 CABLES

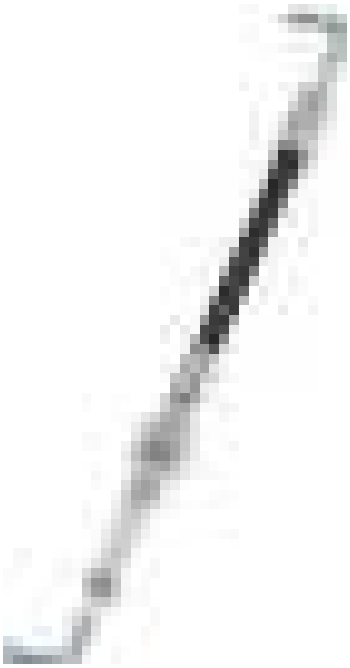

MATERIAL
BODY: Steel

FINISH
Zinc Plated

Note: Cable diameter is 1.5 mm

Group Code	Version	TYPE	Lenght
2801	V	T	L

TYPE	T
With spring	1
Without spring	0

LENGHT (L)
1000 mm
1500 mm
2000 mm

SLIDING LOCK 071



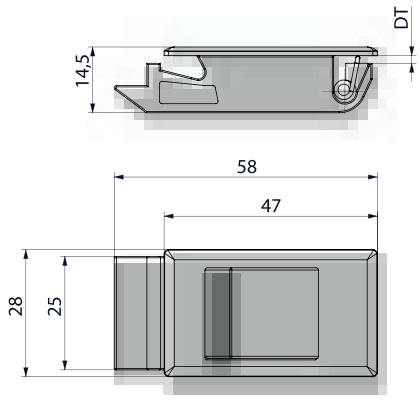

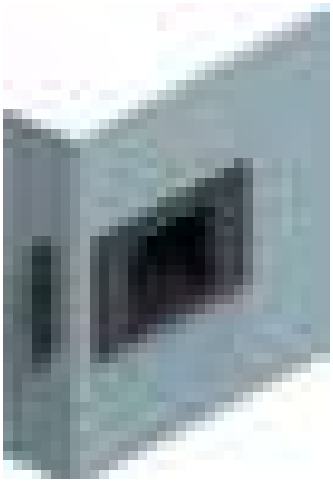

- Easy fixing
- Long-lasting stainless steel spring
- Suitable for panel thicknesses of between 0.8 mm and 1.5 mm

MATERIAL
BODY: ABS
SPRING: Stainless Steel

SPECIFICATIONS	PRODUCT CODE
0.8 -1.2 mm thickness panel	**07112**
1.2 -1.5 mm thickness panel	**07115**

SLIDING LOCK 371

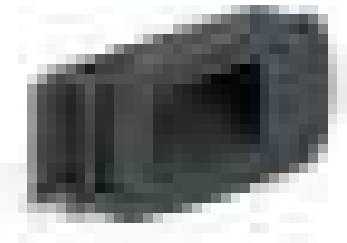

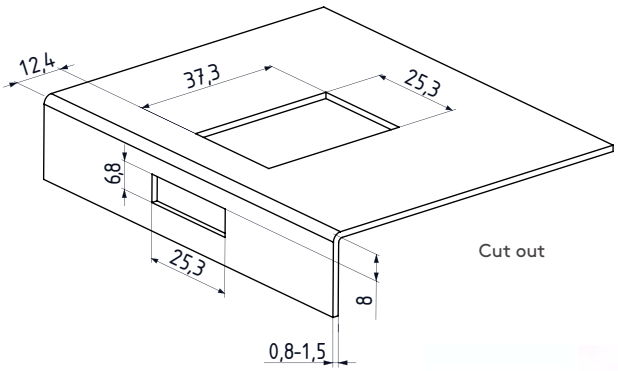

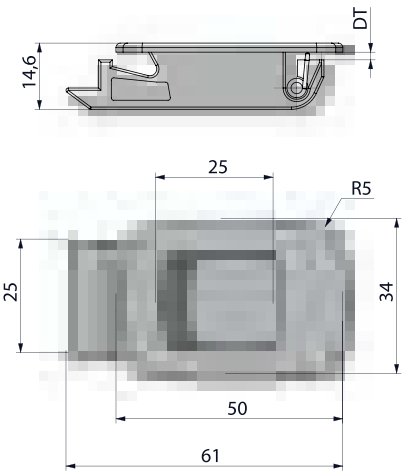

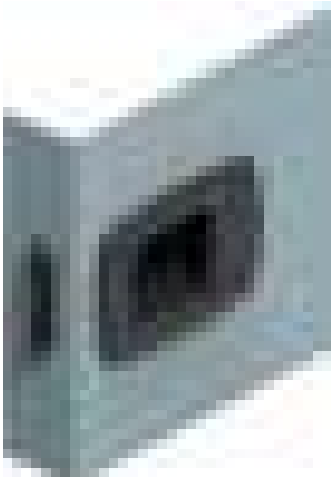

- Stylish design
- Easy fixing
- Long-lasting spring
- Suitable for panel thicknesses of between 0.8 mm and 1.5 mm
- Suitable for small doors
- For different colour choices please contact Essentra

MATERIAL
BODY: ABS
SPRING: Stainless Steel

SPECIFICATIONS	PRODUCT CODE
0.8 -1.2 mm thickness panel	**37112**
1.2 -1.5 mm thickness panel	**37115**

tel | + 90 212 721 44 44 fax | + 90 212 721 44 45

171 MINI SLIDING LOCK

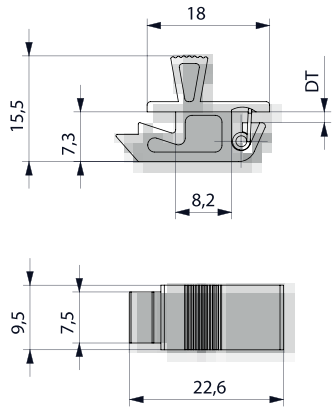

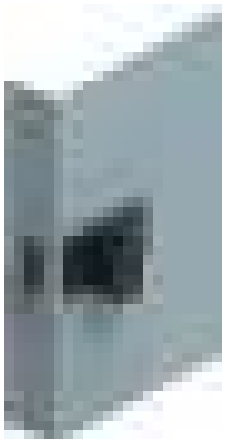

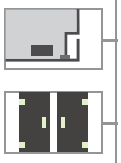



- Suitable for small doors and inside panels
- Suitable for panel thicknesses of between 0.8 mm and 1.5 mm

MATERIAL
BODY: ABS
SPRING: Stainless Steel

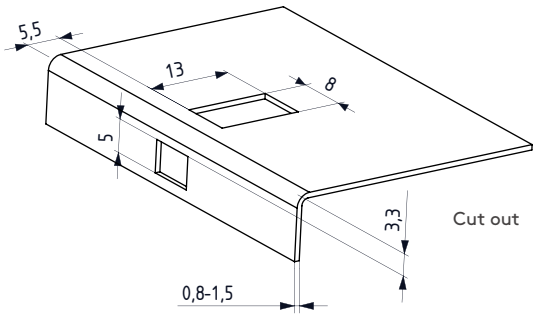

Cut out

DT: DOOR THICKNESS	
Min	Max
0.8mm	1.5mm

471 MINI SLIDING LOCK

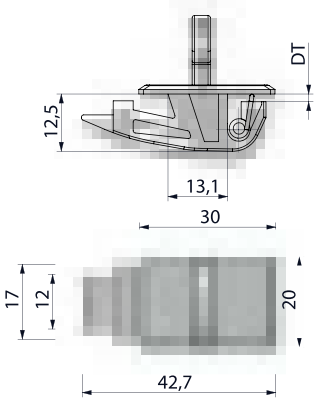

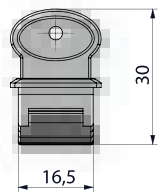

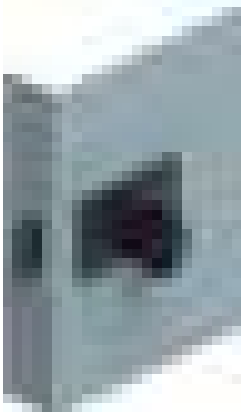

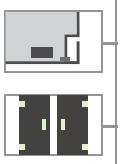

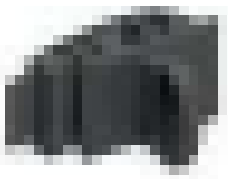

- Suitable for small doors and inside panels
- Suitable for panel thicknesses of between 0.8 mm and 1.5 mm

MATERIAL
BODY: ABS
SPRING: Stainless Steel

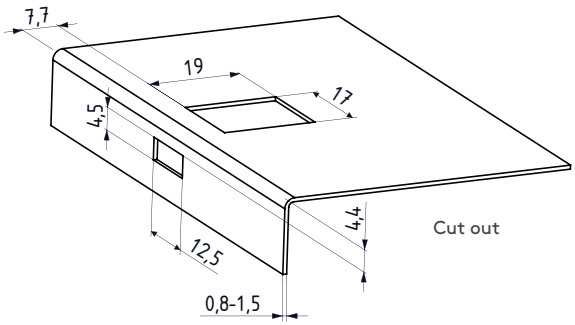

Cut out

SPECIFICATIONS	PRODUCT CODE
0.8 -1.2 mm thickness panel	**47112**
1.2 -1.5 mm thickness panel	**47115**

SLIDING LOCK — 671



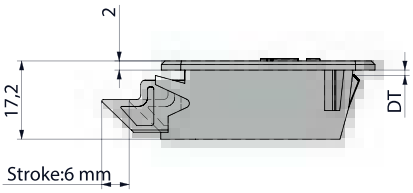

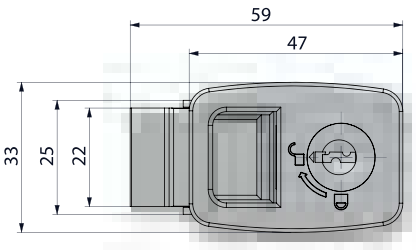

DT: DOOR THICKNESS	
Min	Max
0.8mm	1.5mm

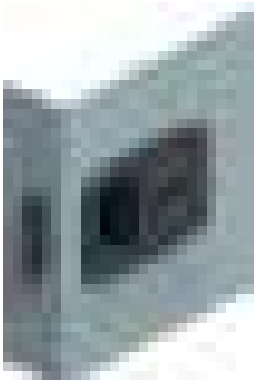

- Cylinder Locking System
- Eleminates the risk of scratch on paint thanks to the 2 part design.
- Suitable for small size doors
- Easy assembly by clips
- Suiable for panel thicknesses of 0.8 - 1.5 mm

MATERIAL
BODY: ABS
SPRING: Stainless steel
CYLINDER: PA6 GFR 30

Group Code	Cylinder
671	DD

CYLINDER	DD
Keyed alike	01
Euro key (5333)	05

SLIDING LOCK — 571

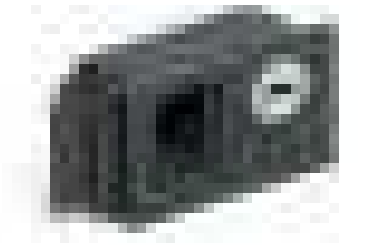

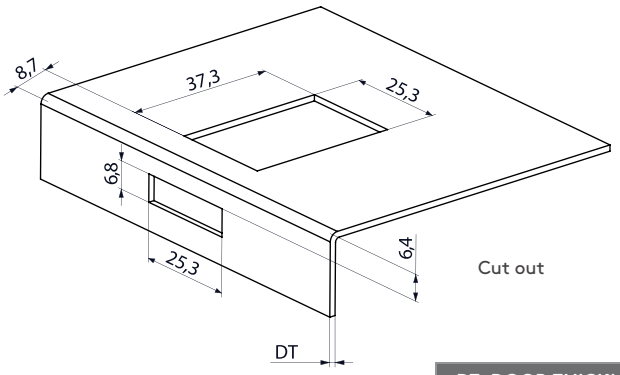

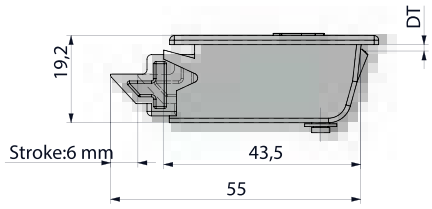

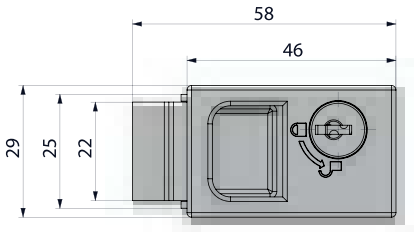

DT: DOOR THICKNESS	
Min	Max
0.8mm	1.5mm

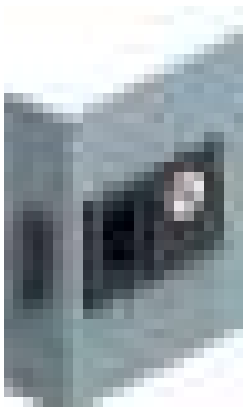

- Cylinder Locking System
- Eleminates the risk of scratch on paint thanks to the 2 part design.
- Suitable for small size doors
- Easy assembly by clips
- Suiable for panel thicknesses of 0.8 - 1.5 mm

MATERIAL
BODY: ABS
SPRING: Stainless steel
CYLINDER: Zamak DIN-EN 1774-ZnAl4Cu1

Group Code	Cylinder
571	DD

CYLINDER	DD
Stainless steel dust cap (Keyed alike)	03

tel | + 90 212 721 44 44 fax | + 90 212 721 44 45

271 SLIDING LOCK

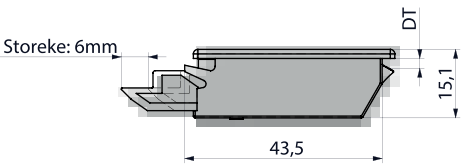

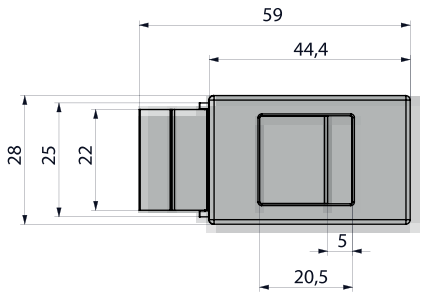

DT: DOOR THICKNESS	
Min	Max
0.8mm	1.5mm

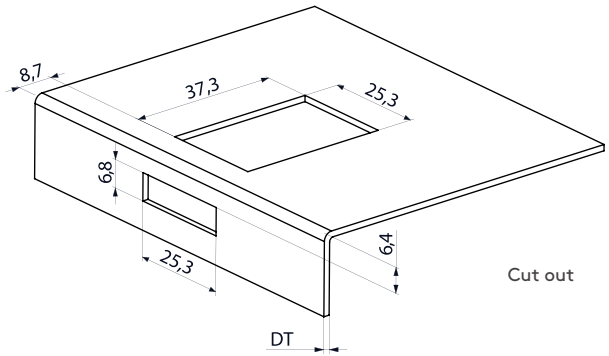

Cut out



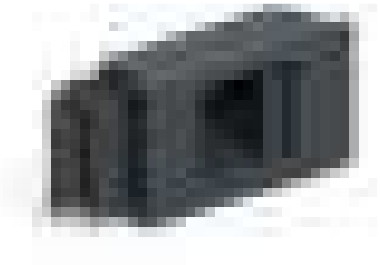

- Two-piece design eliminates paint problems on doors
- Suitable for small doors
- Easy assembly with clips on body
- Suitable for panel thicknesses of between 0.8 mm and 1.5 mm

MATERIAL

BODY: ABS
SPRING: Stainless Steel

MINI LOCK

466



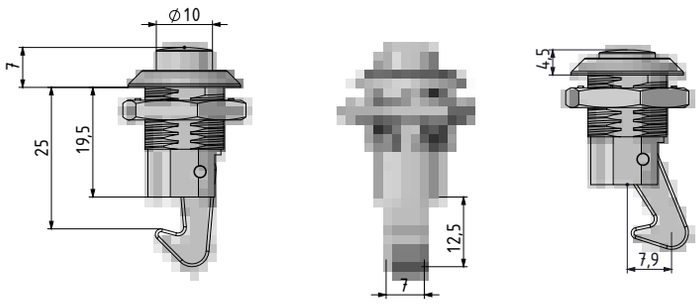

- Easily opened by pressing button
- Suitable for small doors

MATERIAL

HOUSING:	Zamak DIN-EN 1774-ZnAl4Cu1
BUTTON:	Zamak DIN-EN 1774-ZnAl4Cu1
CAM:	Zamak DIN-EN 1774-ZnAl4Cu1

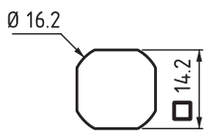

Cut out

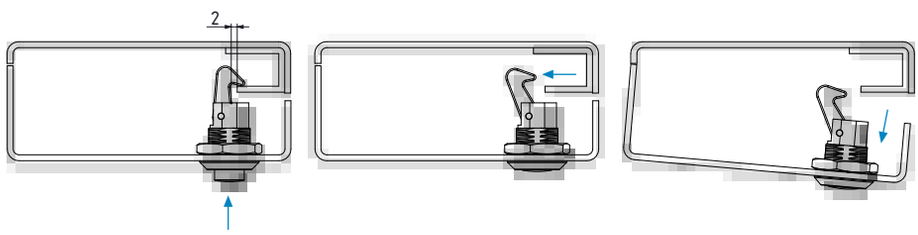

Position 1
Press button

Position 2
Hook cam opens

Position 3
Door opens

MATERIAL	F	FINISH	F
Zamak	1	Chrome plated	1
		Black coated	2

Group Code	Material	Finish
466	1	F

tel | + 90 212 721 44 44 fax | + 90 212 721 44 45

073 QUARTER-TURN LOCK

RoHS



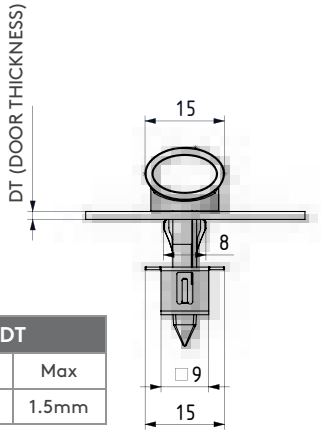

DT	
Min	Max
0.8mm	1.5mm

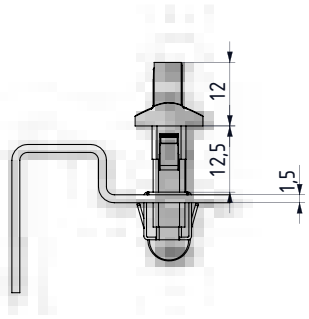

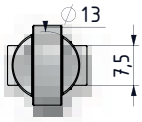

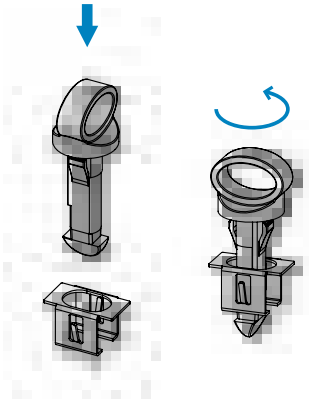

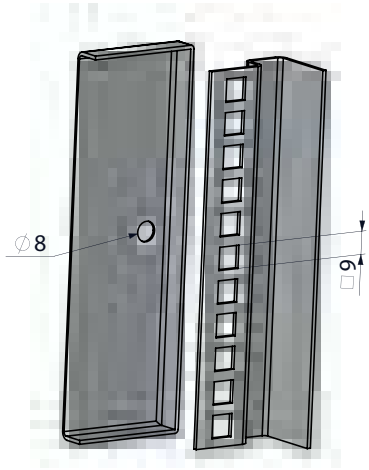

Cut out

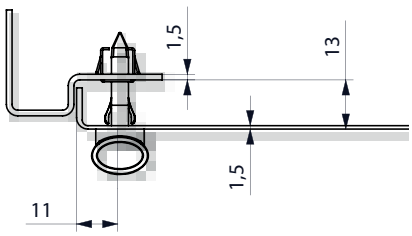

- Fix small panels to frame with ease
- Quarter-turn locking
- Easy assembly
- For doors with a bend of 24 mm

MATERIAL

HANDLE:	ABS
FRAME PART:	Steel

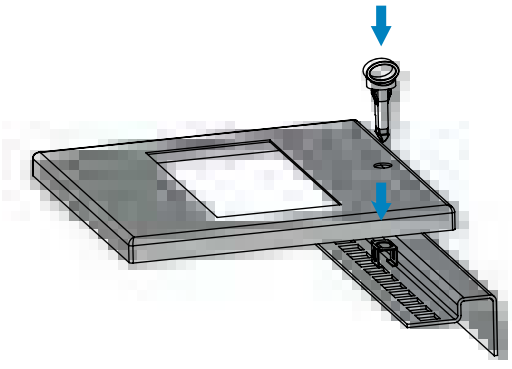

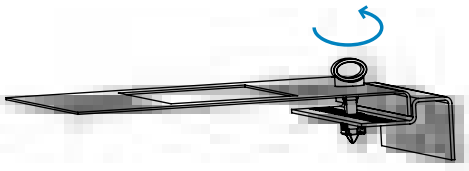

HOOKED LOCK — 176



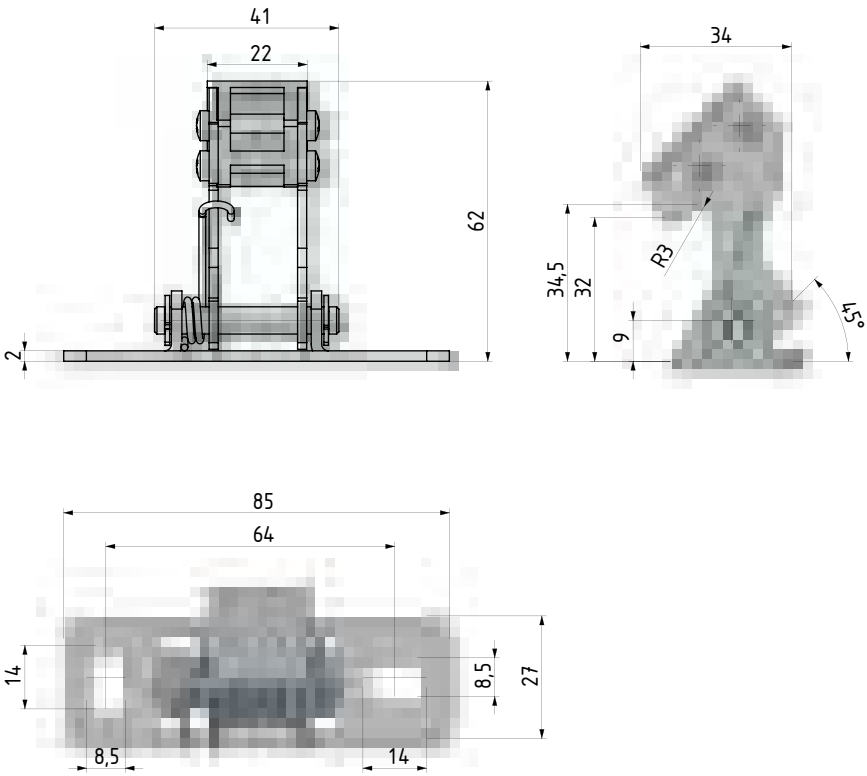

- Used for locking back doors of generators without external lock
- Can open from inside by moving cam

MATERIAL
Steel or stainless steel

Note: Special square-base screws are included

CAM STRIKING PLATE — 016 A71

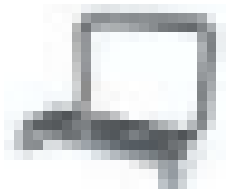

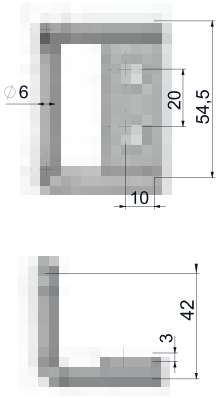

- Striking plate.
- Custom sizes available

MATERIAL	F	FINISH	F
Steel	6	Chrome plated	1
Stainless steel	4	No finish	0

Group Code	Material	Finish
176	M	F

tel | + 90 212 721 44 44 fax | + 90 212 721 44 45

FAST FIND INDEX

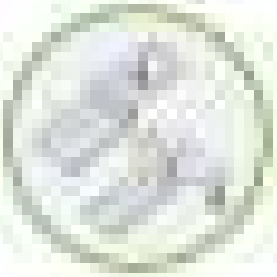
170-171


172-173

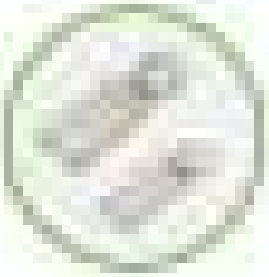
174

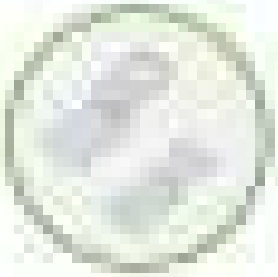
175


176


177


180

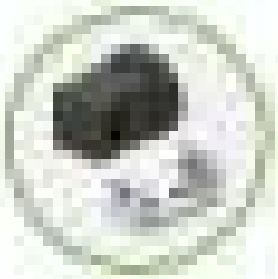
180

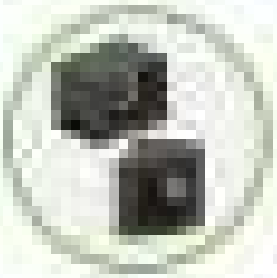
181


182


182

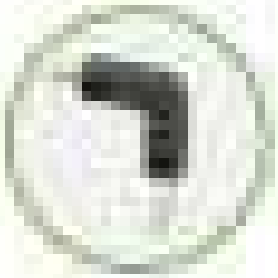
183

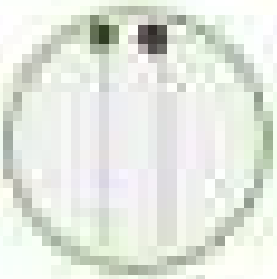
184-185

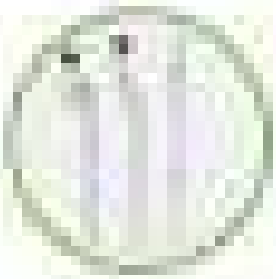
186-188


189


190


191


190

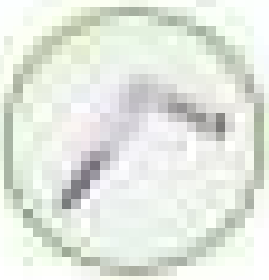
190

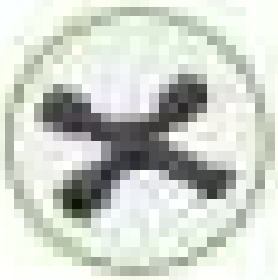
191



CAMS, KEYS, RODS & ROD GUIDES

168-191

mesan
ESSENTRA COMPONENTS

email | info@mesanlocks.com web | www.mesanlocks.com

CAMS WITH STOPPERS

H: Grip
LH: Height of housing
CL: Cam length
CH: Cam height

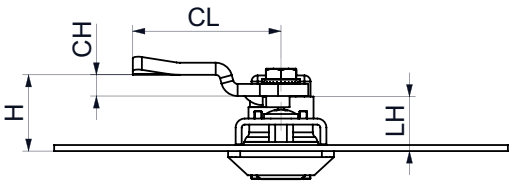

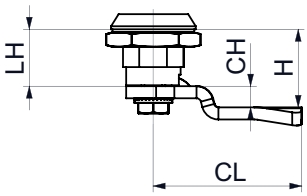

MATERIAL: Steel
FINISH: Zinc plated
THICKNESS: 4 mm

Cam 1



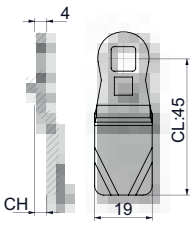

STOCK CODE	CC	CH	CL	LH:18 H	LH:18.5 H	LH:20 H	LH:21 H	LH:30 H	LH:32 H	LH:35 H	LH:40 H	LH:50 H	LH:60 H
30403033Y	30	0	45	18	18.5	20	21	30	32	35	40	50	60
30403439Y	17	1	45	19	19.5	21	22	31	33	36	41	51	61
30403159Y	35	2	45	20	20.5	22	23	32	34	37	42	52	62
30403063Y	31	3	45	21	21.5	23	24	33	35	38	43	53	63
30403149Y	33	4	45	22	22.5	24	25	34	37	39	44	54	64
30403160Y	34	6	45	24	24.5	26	27	36	38	41	46	56	66
30403161Y	36	8	45	26	26.5	28	29	38	40	43	48	58	68
30403162Y	47	10	45	28	28.5	30	31	40	42	45	50	60	70
30403045Y	44	12	45	30	30.5	32	33	42	44	47	52	62	72
30403163Y	48	14	45	32	32.5	34	35	44	46	49	54	64	74
30403151Y	49	16	45	34	34.5	36	37	46	48	51	56	66	76
30403165Y	55	18	45	36	36.5	38	39	48	50	53	58	68	78
30403166Y	56	20	45	38	38.5	40	41	50	52	55	60	70	80
30403167Y	57	22	45	40	40.5	42	43	52	54	57	62	72	82
30403168Y	58	24	45	42	42.5	44	45	54	56	59	64	74	84
30403169Y	37	-2	45	16	16.5	18	19	28	30	33	38	48	58
30403170Y	38	-4	45	14	14.5	16	17	26	28	31	36	46	56
30403171Y	39	-6	45	12	12.5	14	15	24	26	29	34	44	54
30403172Y	59	-8	45	10	10.5	12	13	22	24	27	32	42	52
30403173Y	60	-10	45	8	8.5	10	11	20	22	25	30	40	50
30403174Y	61	-12	45	6	6.5	8	9	18	20	23	28	38	48
30403175Y	62	-14	45	4	4.5	6	7	16	18	21	26	36	46

MATERIAL: Steel
FINISH: Zinc plated
THICKNESS: 4 mm

Cam 2



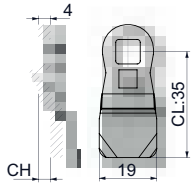

STOCK CODE	CC	CH	CL	LH:18 H	LH:18.5 H	LH:20 H	LH:21 H	LH:30 H	LH:32 H	LH:35 H	LH:40 H	LH:50 H	LH:60 H
30403187Y	11	-2	35	16	16.5	18	19	28	30	33	38	48	58
30403185Y	12	0	35	18	18.5	20	21	30	32	35	40	50	60
30403186Y	13	2	35	20	20.5	22	23	32	34	37	42	52	62
30403188Y	14	4	35	22	22.5	24	25	34	36	39	44	54	64
30403470Y	15	6	35	24	24.5	26	27	36	38	41	46	56	66
30403471Y	16	7	35	25	25.5	27	28	37	39	42	47	57	67
30403189Y	23	10	35	28	28.5	30	31	40	42	45	50	60	70
30403046Y	52	26	35	44	44.5	46	47	56	58	61	66	76	86

tel | +90 212 721 44 44 fax | +90 212 721 44 45

CAMS WITH STOPPERS

MATERIAL: Steel
FINISH: Zinc plated
THICKNESS: 4 mm

Cam 3



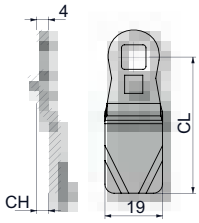

STOCK CODE	CC	CH	CL	LH:18 H	LH:18.5 H	LH:20 H	LH:30 H	LH:32 H	LH:35 H	LH:40 H	LH:50 H	LH:60 H
30403031Y	10	0	29	18	18.5	20	30	32	35	40	50	60
30403032Y	20	0	38	18	18.5	20	30	32	35	40	50	60
30403036Y	70	0	66	18	18.5	20	30	32	35	40	50	60
30403034Y	40	0	51	18	18.5	20	30	32	35	40	50	60
30403037Y	21	3	38	21	21.5	23	33	35	38	43	53	63
30403038Y	41	3	51	21	21.5	23	33	35	38	43	53	63
30403129Y	22	6	37	24	24.5	26	36	38	41	46	56	66
30403039Y	32	7	44	25	25.5	27	37	39	42	47	57	67
30403040Y	42	7	49	25	25.5	27	37	39	42	47	57	67
30403043Y	43	10	48	28	28.5	30	40	42	45	50	60	70

MATERIAL: Steel
FINISH: Zinc plated
THICKNESS: 4 mm

Cam 4

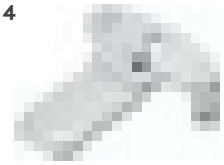

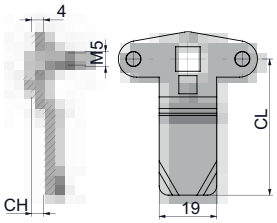

STOCK CODE	CC	CH	CL	LH:18 H	LH:18.5 H	LH:20 H	LH:30 H	LH:32 H	LH:35 H	LH:40 H	LH:50 H	LH:60 H
30403140Y	03	0	51	18	18.5	20	30	32	35	40	50	60
30403522Y	06	0	45	18	18.5	20	30	32	35	40	50	60
30403047Y	01	7	49	25	25.5	27	37	39	42	47	57	67
30403524Y	07	2	45	20	20.5	22	32	34	37	42	52	62
30403526Y	08	3	45	21	21.5	23	33	35	38	43	53	63
30403528Y	09	4	45	22	22.5	24	34	36	39	44	54	64
30403530Y	100	5	45	23	23.5	25	35	37	40	45	55	65
30403532Y	101	6	45	24	24.5	26	36	38	41	46	56	66
30403534Y	102	7	45	25	25.5	27	37	39	42	47	57	67
30403147Y	02	12	46	30	30.5	32	42	44	47	52	62	72
30403536Y	103	14	45	32	32.5	34	44	46	49	54	64	74

MATERIAL: Plastic

Cam 5



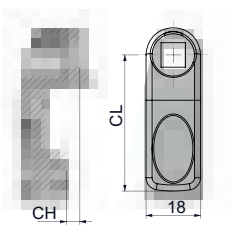

STOCK CODE	CC	CH	CL	LH:18 H	LH:18.5 H	LH:20 H	LH:30 H	LH:35 H	LH:40 H	LH:50 H	LH:60 H
30402004Y	90	0	35	18	18.5	20	30	35	40	50	60
30402011Y	93	0	25	18	18.5	20	30	35	40	50	60
30402005Y	91	6	35	24	24.5	26	36	41	46	56	66
30402008Y	92	4	45	22	22.5	24	34	39	44	54	64
30402013Y	94	-4	45	14	14.5	16	26	31	36	46	56

CAMS WITHOUT STOPPERS

H: Grip
LH: Height of housing
CL: Cam length
CH: Cam height

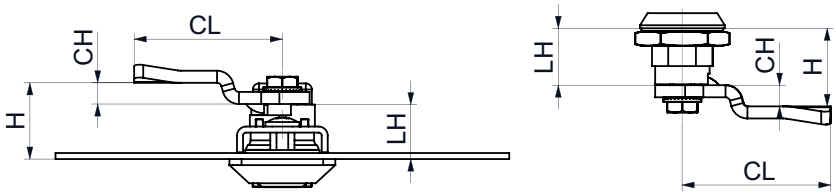

MATERIAL: Steel
FINISH: Zinc plated
THICKNESS: 4 mm

Cam 1

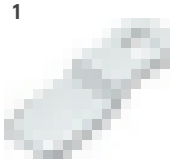

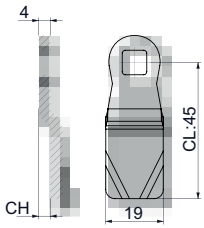

STOCK CODE	CC	CH	CL	LH:14 H	LH:18.5 H	LH:19 H	LH : 20 H	LH : 22 H	LH : 25 H	LH : 32 H
30403117Y	30	0	45	14	18.5	19	20	22	25	32
30403557Y	17	1	45	15	19.5	20	21	23	26	33
30403581Y	35	2	45	16	20.5	21	22	24	27	34
30403054Y	31	3	45	17	21.5	22	23	25	28	35
30403197Y	33	4	45	18	22.5	23	24	26	29	36
30403128Y	34	6	45	20	24.5	25	26	28	31	38
30403583Y	36	8	45	22	26.5	27	28	30	33	40
30403584Y	47	10	45	24	28.5	29	30	32	35	42
30403123Y	44	12	45	26	30.5	31	32	34	37	44
30403422Y	48	14	45	28	32.5	33	34	36	39	46
30403410Y	49	16	45	30	34.5	35	36	38	41	48
30403429Y	55	18	45	32	36.5	37	38	40	43	50
30403585Y	56	20	45	34	38.5	39	40	42	45	52
30403586Y	57	22	45	36	40.5	41	42	44	47	54
30403411Y	58	24	45	38	42.5	43	44	46	49	56
30403425Y	37	- 2	45	12	16.5	17	18	20	23	30
30403198Y	38	- 4	45	10	14.5	15	16	18	21	28
30403423Y	39	- 6	45	8	12.5	13	14	16	19	26
30403412Y	59	- 8	45	6	10.5	11	12	14	17	24
30403552Y	60	- 10	45	4	8.5	9	10	12	15	22
30403587Y	61	- 12	45	2	6.5	7	8	10	13	20
30403420Y	62	- 14	45	0	4.5	5	6	8	11	18

MATERIAL: Steel
FINISH: Zinc plated
THICKNESS: 4 mm

Cam 2



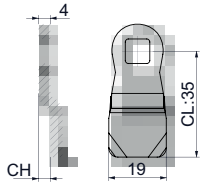

STOCK CODE	CC	CH	CL	LH:14 H	LH:18.5 H	LH : 19 H	LH : 20 H	LH : 22 H	LH : 25 H	LH : 32 H
30403069Y	11	-2	35	12	16.5	18	18	20	23	30
30403444Y	12	0	35	14	18.5	20	20	22	25	32
30403519Y	13	2	35	16	20.5	22	22	24	27	34
30403588Y	14	4	35	18	22.5	24	24	26	29	36
30403477Y	15	6	35	20	24.5	26	26	28	31	38
30403589Y	16	7	35	21	25.5	27	27	29	32	39
30403407Y	23	10	35	24	28.5	30	30	32	35	42
30403075Y	52	26	35	40	44.5	46	36	48	51	58

tel | +90 212 721 44 44 fax | +90 212 721 44 45

CAMS WITHOUT STOPPERS

MATERIAL: Steel
FINISH: Zinc plated
THICKNESS: 4 mm

Cam 3



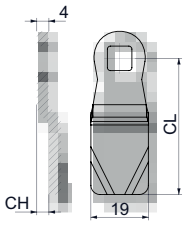

STOCK CODE	CC	CH	CL	LH:14 H	LH:18.5 H	LH:19 H	LH : 20 H	LH : 22 H	LH : 25 H	LH : 32 H
30403006Y	10	0	29	14	18.5	19	20	22	25	32
30403130Y	20	0	38	14	18.5	19	20	22	25	32
30403117Y	30	0	45	14	18.5	19	20	22	25	32
30403003Y	40	0	51	14	18.5	19	20	22	25	32
30403005Y	70	0	66	14	18.5	19	20	22	25	32
30403064Y	21	3	38	17	21.5	22	23	25	28	35
30403054Y	31	3	45	17	21.5	22	23	25	28	35
30403141Y	41	3	51	17	21.5	22	23	25	28	35
30403138Y	22	6	37	20	24.5	25	26	28	31	38
30403128Y	34	6	45	20	24.5	25	26	28	31	38
30403073Y	32	7	44	21	25.5	26	27	29	32	39
30403002Y	42	7	49	21	25.5	26	27	29	32	39
30403004Y	43	10	48	24	28.5	29	30	32	35	42
30403123Y	44	12	45	26	30.5	31	32	34	37	44

MATERIAL: Steel
FINISH: Zinc plated
THICKNESS: 4 mm

Cam 4



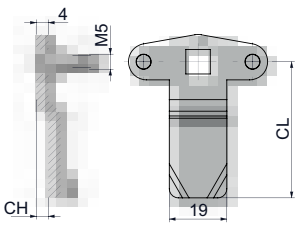

STOCK CODE	CC	CH	CL	LH:18.5 H
30403135Y	03	0	51	18.5
30403523Y	06	0	45	18.5
30403001Y	01	7	49	25.5
30403525Y	07	2	45	20.5
30403527Y	08	3	45	21.5
30403529Y	09	4	45	22.5
30403531Y	100	5	45	23.5
30403533Y	101	6	45	24.5
30403535Y	102	7	45	25.5
30403068Y	02	12	46	30.5
30403537Y	103	14	45	32.5

MATERIAL: Plastic

Cam 5



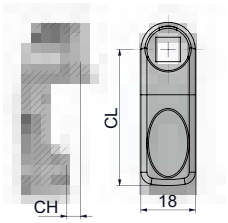

STOCK CODE	CC	CH	CL	LH:18.5 H	LH: 20 H	LH: 25 H
30402002Y	90	0	35	18.5	20	25
30402010Y	93	0	25	18.5	20	25
30402007Y	92	4	45	22.5	24	29
30402003Y	91	6	35	24.5	26	31
30402014Y	94	-4	45	14.5	16	21

STAINLESS STEEL CAMS

WITH STOPPER

Cam 1



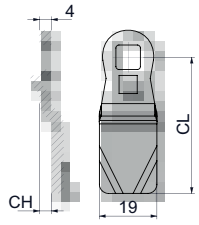

STOCK CODE	CC	CH	CL	LH:18 H	LH:18.5 H	LH:20 H	LH:22 H	LH:30 H	LH:32 H	LH:40 H	LH:50 H	LH:60 H
30405004Y	30	0	45	18	18.5	20	22	30	32	40	50	60
30405003Y	40	0	51	18	18.5	20	22	30	32	40	50	60
30405159Y	35	2	45	20	20.5	22	24	32	34	42	52	62
30405063Y	31	3	45	21	21.5	23	25	33	35	43	53	63
30405149Y	33	4	45	22	22.5	24	26	34	36	44	54	64
30405160Y	34	6	45	24	24.5	26	28	36	38	46	56	66
30405040Y	42	7	49	25	25.5	27	29	37	39	47	57	67
30405006Y	36	8	45	26	26.5	28	30	38	41	48	58	68
30405162Y	47	10	45	28	28.5	30	32	40	42	50	60	70
30405045Y	44	12	45	30	30.5	32	34	42	44	52	62	72

WITHOUT STOPPER

Cam 2



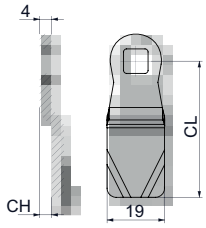

STOCK CODE	CC	CH	CL	LH:18.5 H	LH:20 H	LH:22 H	LH:25 H	LH:32 H
30405117Y	30	0	45	18.5	20	22	25	32
30405058Y	40	0	51	18.5	20	22	25	32
30405012Y	35	2	45	20.5	22	24	27	34
30405013Y	31	3	45	21.5	23	25	28	35
30405015Y	34	4	45	22.5	24	26	29	36
30405002Y	42	7	49	25.5	27	29	32	39
30405016Y	36	8	45	26.5	28	30	33	40
30405017Y	47	10	45	28.5	30	32	35	42
30405018Y	44	12	45	30.5	32	34	37	44

WITH STOPPER

Cam 3



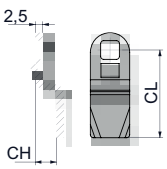

STOCK CODE	CC	CH	CL	LH:13.5 H
30405084Y	10	0	33	13.5
30405085Y	11	7	30	20.5
30405184Y	20	0	25	13.5
30405196Y	22	-6	25	7.5

tel | +90 212 721 44 44 fax | +90 212 721 44 45

ADDITIONAL CAMS

LOCKS

H: Grip
LH: Height of housing
CL: Cam length
CH: Cam height

GROUP CODE	050	150	250	072	066	166	366	566	057	055	165
LH	16.5 20 25 30	20	20	29	13.5	13.5	13.5	13.5	13.5	20 32	16
CAM	1-2	1	1	1	3	3	3	3	4	1	3

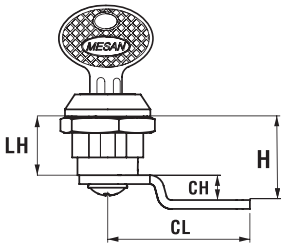

Cam 1

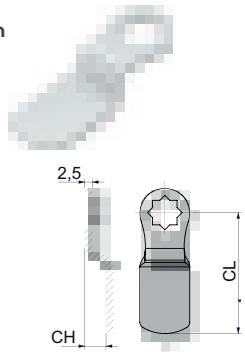

STOCK CODE	CC	CH	CL	LH:16.5 H	LH:20 H	LH:25 H	LH:29 H	LH:30 H	LH:32 H
30403124Y	50	0	43	16.5	20	25	29	30	32
31403010Y	56	0	23	16.5	20	25	29	30	32
31403011Y	30	0	33	16.5	20	25	29	30	32
30403157Y	57	3	48	19.5	23	28	32	33	35
30403125Y	51	7	40	23.5	27	32	36	37	39
30403110Y	52	10	37	26.5	30	35	39	40	42
30403111Y	53	14	33	30.5	34	39	43	44	46

Cam 2

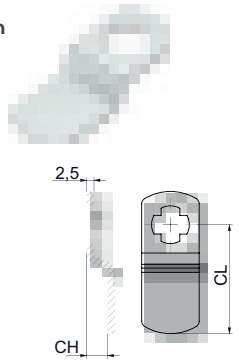

STOCK CODE	CC	CH	CL	LH:16.5 H
30403014Y	10	0	38	16.5
30403100Y	30	0	33	16.5
30403019Y	20	0	49	16.5
30403082Y	11	3	38	19.5
30403015Y	12	7	36	23.5
30403016Y	21	7	47	23.5
30403017Y	22	10	44	26.5
30403022Y	13	0	39	16.5

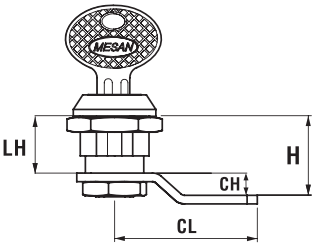



Hook cam (CC: 13)

Cam 3

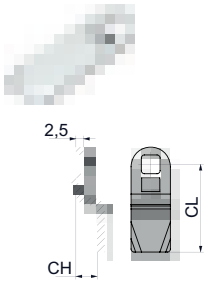

STOCK CODE	CC	CH	CL	LH:13.5 H	LH:16 H
30403084Y	10	0	33	13.5	16
30403184Y	20	0	25	13.5	16
30403183Y	21	6	25	19.5	22
30403085Y	11	7	30	20.5	23
30403196Y	22	-6	25	7.5	10

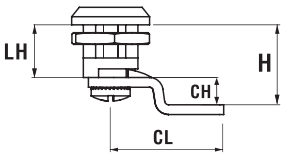

Cam 4

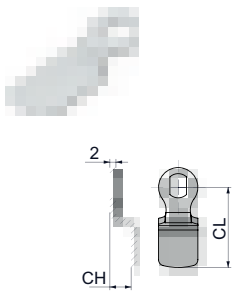

STOCK CODE	CC	CH	CL	LH:13 H
30403158Y	10	0	24	13
31403016Y	50	0	21	13
30403029Y	20	0	31	13
30403028Y	30	0	36	13
30403089Y	21	3	30	16
30403030Y	22	7	26	20
30403182Y	11	-3	28	10
30403058Y	40	0	31	13

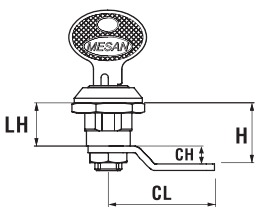

Hook cam (CC: 40)

SLIDE SHOE FOR CAM

320.02.180

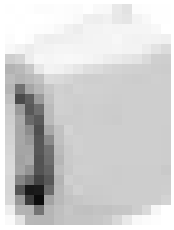

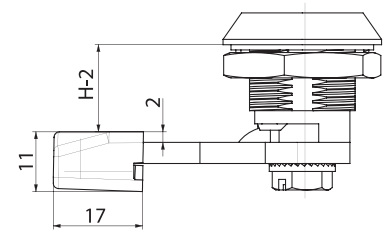

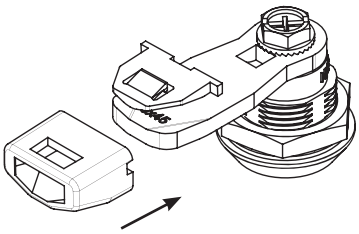

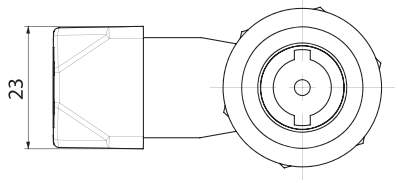

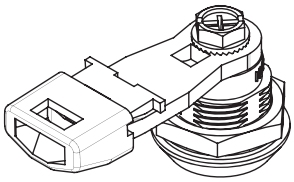



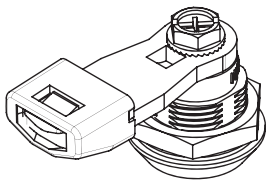

- Reduces the LH and H dimensions by 2 mm. Choose CH -2 mm for cam selection compared to unused

MATERIAL
Delrin

HOOK CAMS

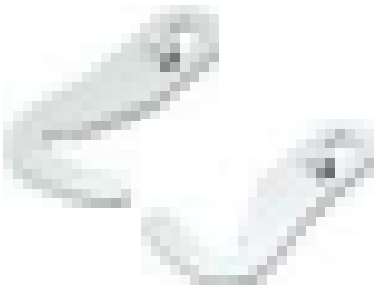





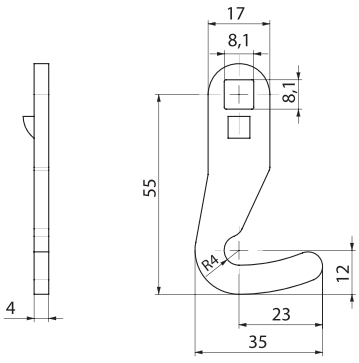

STOCK CODE	CC	CH	CL
30403485	485	0	55

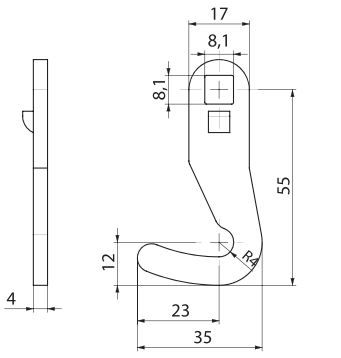

STOCK CODE	CC	CH	CL
30403516	516	0	55

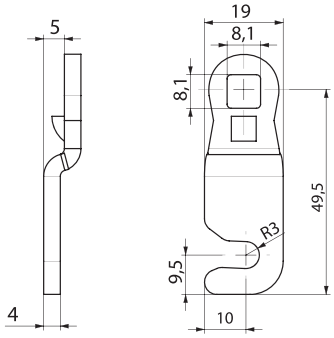

STOCK CODE	CC	CH	CL
30403672	672	-5	49

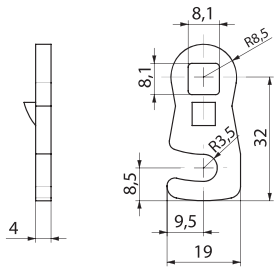

STOCK CODE	CC	CH	CL
30403712	712	0	32

- With stopper

MATERIAL
Steel

FINISH
Zinc plated

tel | +90 212 721 44 44 fax | +90 212 721 44 45

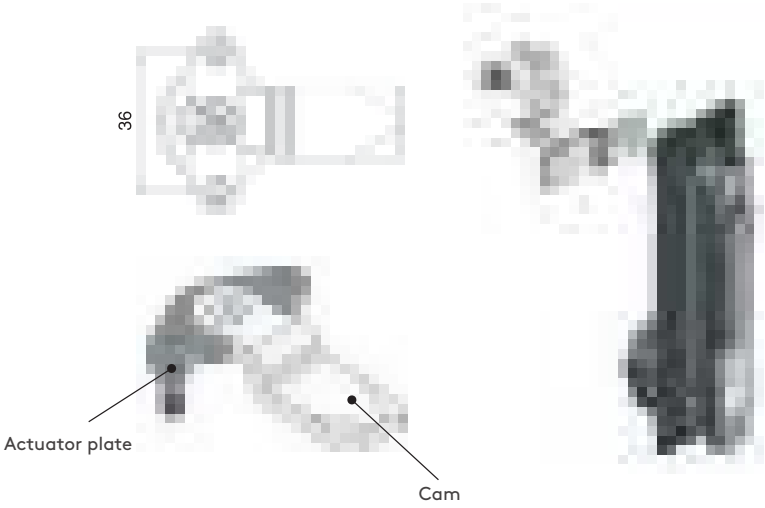

30403499

ACTUATOR PLATE

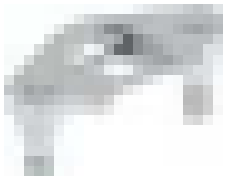

- three-point locking actuator plate.

MATERIAL
Steel

FINISH
Zinc plated

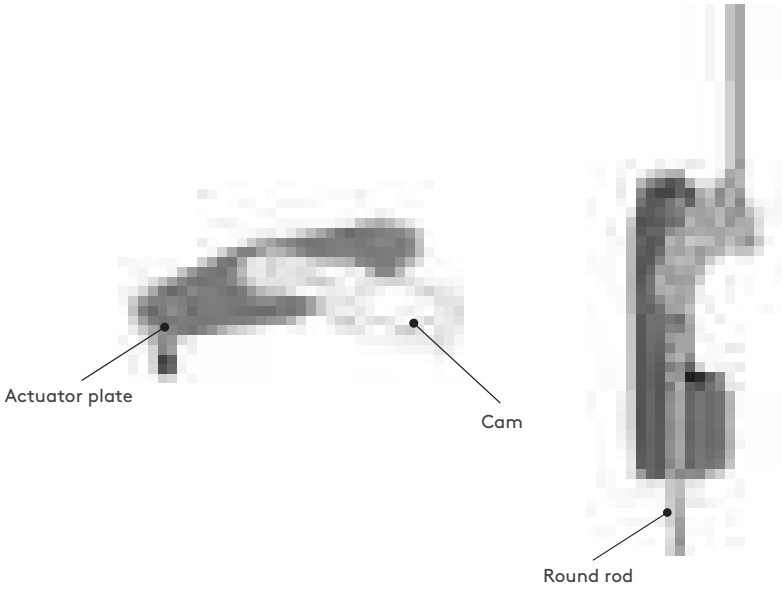

Right hand
30403563

Left hand
30403632

ACTUATOR PLATE



⚠ **Note:** This plate is used for 501 swing handle (p.30)

ACTUATOR PLATE

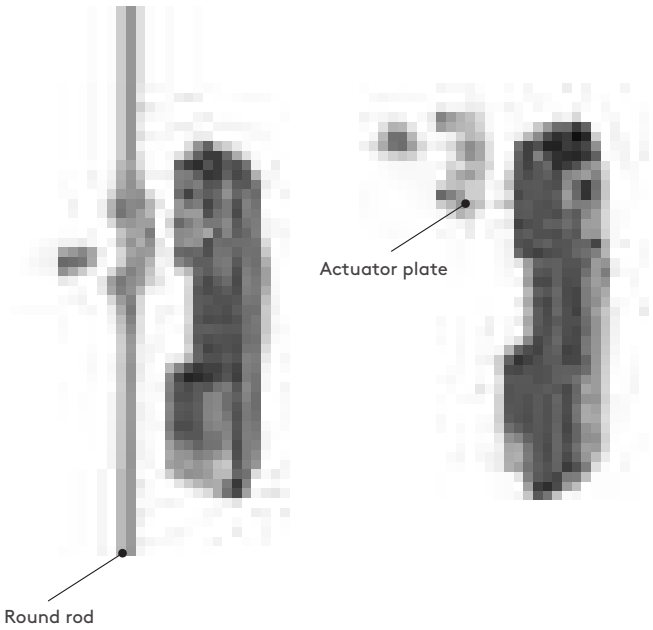

30403496

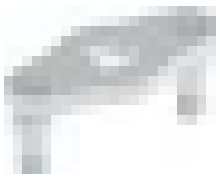

- 2-point locking actuator plate without stop lip.

30403495



- 22-point locking actuator plate with stop lip.

MATERIAL
Steel

FINISH
Zinc plated

Espagnolette round and flat rod applications and accessories

IC

▶ ROUND-ROD APPLICATIONS

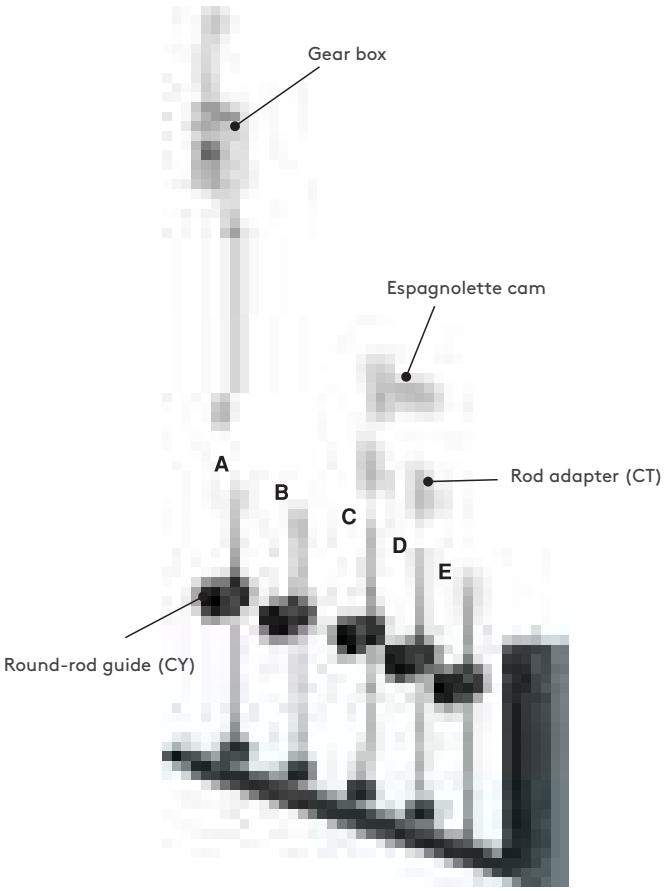

Inside the gasketing applications

A - IC.4.L:	Suitable for the gear-box applications. Rod adapter can not be used.
B - IC.3.L:	Suitable for the espagnolette-cam applications. Rod adapter can not be used.
C - IC.6.L:	Suitable for both gear-box and espagnolette-cam applications. Rod adapter can be used.
D- IC.2.L:	Suitable for both gear-box and espagnolette-cam applications. Rod adapter can be used.
E- IC.1.L:	Suitable for both gear-box and espagnolette-cam applications. Rod adapter can not be used. Alternative locking achievable with locking hole.

- Different rod-lengths are available. Please check the next pages
- Round-rod guide must be used for all applications. Please check the accessory pages

IL

▶ FLAT-ROD APPLICATIONS

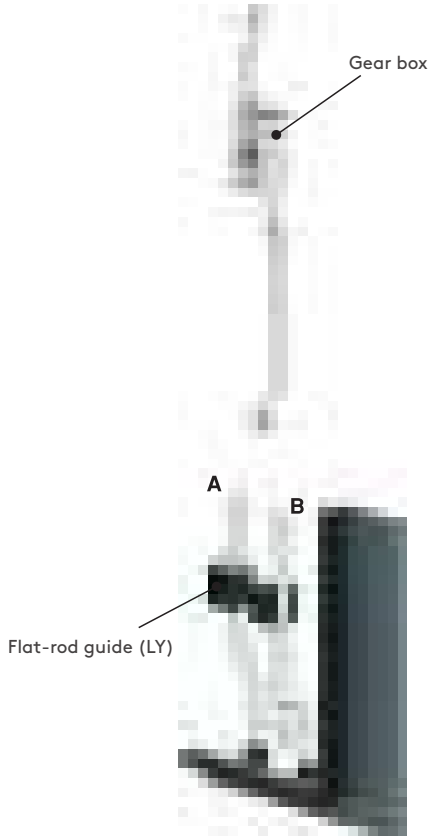

Inside the gasketing applications

A - IL.1.h.1020:	Suitable for the gear box applications. Two height (h) alternatives are available.
B - IL.2.h.1020	Suitable for the gear-box applications. Four height (h) alternatives are available.

- Flat-rod guide must be used for all espagnolette flat-rod applictions. Please check the accessory pages
- Standard flat-rod length is 1020mm

tel | +90 212 721 44 44 fax | +90 212 721 44 45

Flat rod applications for multipoint locking and accessories.

ILP

▶ MULTIPOINT LOCKING FLAT-ROD APPLICATIONS

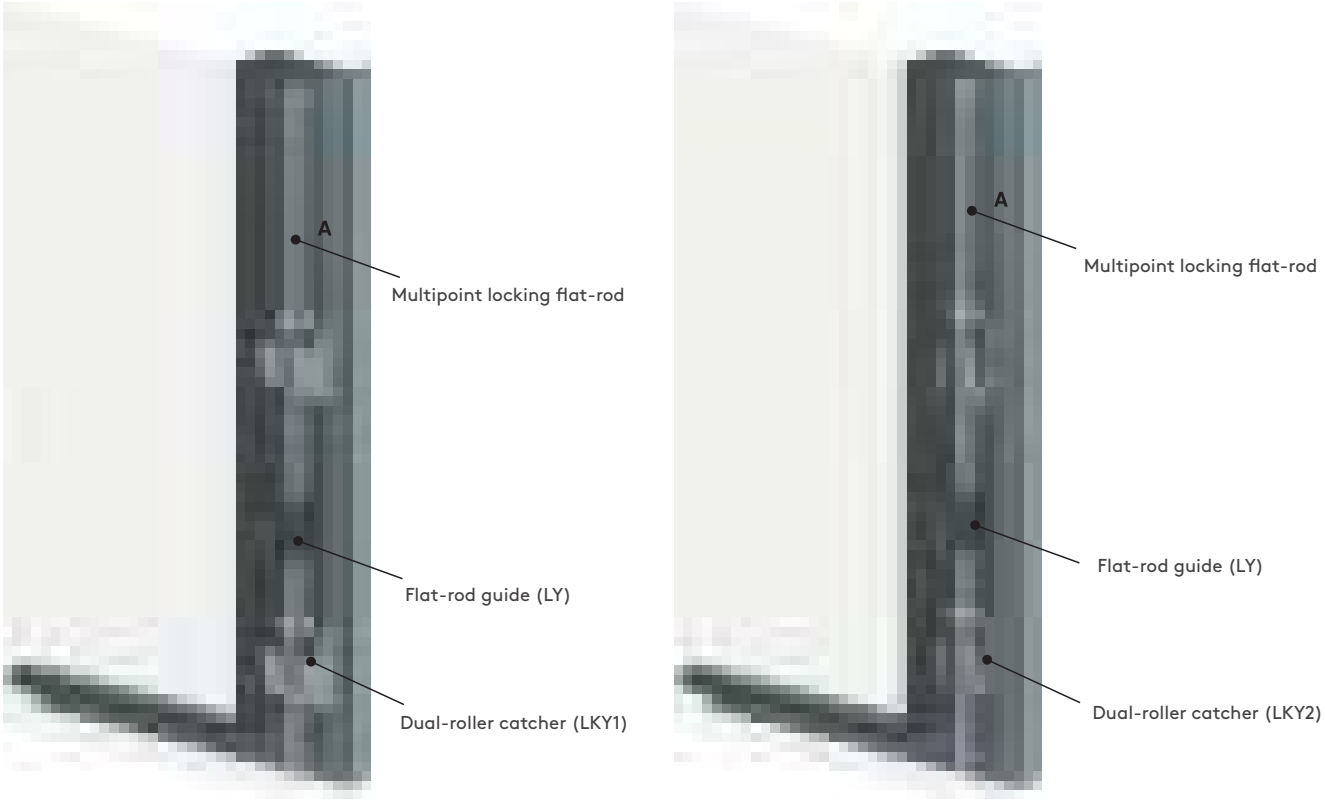


Outside the gasketing applications

A - ILP.1.575 Suitable for out-of-gasket locks

- Flat-rod guide and dual-roller catcher must be used for all espagnolette flat-rod applications. Please check the accessory pages

ROUND-ROD ACCESSORIES

ROD ADAPTER — CT1

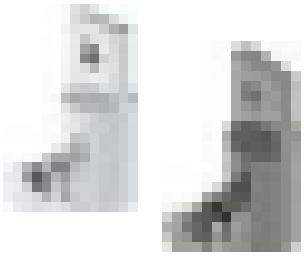

MATERIAL
Zamak DIN-EN 1774-ZnAl4Cu1

FINISH
Zinc plated

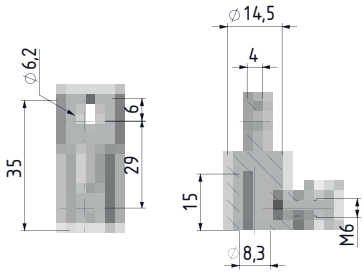

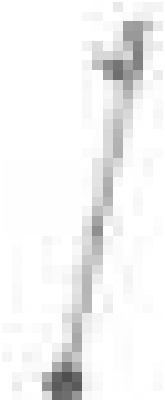

MATERIAL	FINISH	PRODUCT CODE
Zamak	Zinc plated	CT113
Stainless Steel	No finish	CT140

ROD ADAPTER — CT2

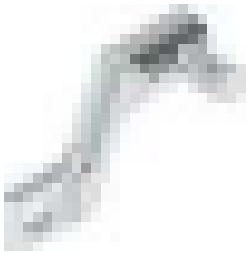

- For horizontal application

MATERIAL
Zamak DIN-EN 1774-ZnAl4Cu1

FINISH
Zinc plated

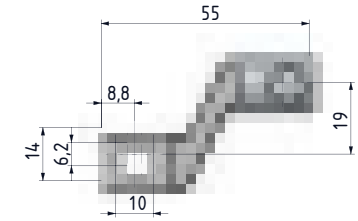

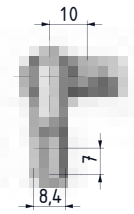

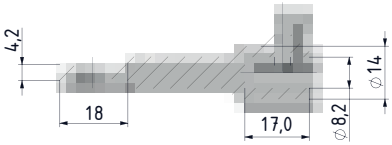

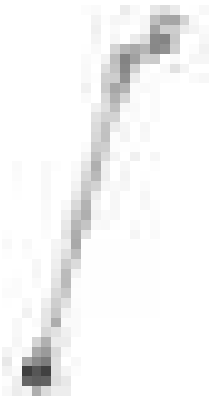

ROUND-ROD GUIDE — CY1

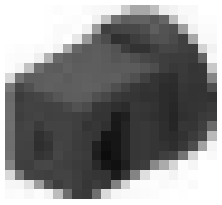

MATERIAL
Polyamide PA6 GFR 30

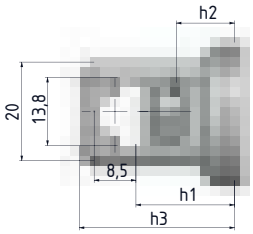

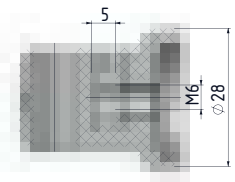

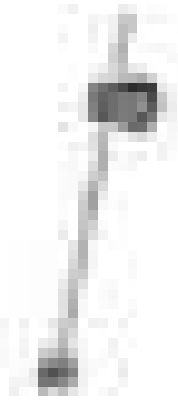

H1	H2	H3	FIXING SCREW	PRODUCT CODE
20	12	32	M6 X 16	CY120
24	16	36	M6 X 20	CY124
26	18	38	M6 X 22	CY126

ROUND-ROD GUIDE — CY2

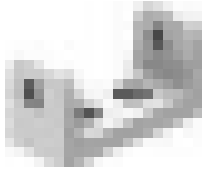

MATERIAL
Delrin

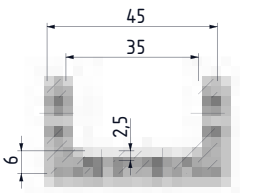

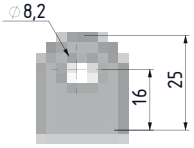

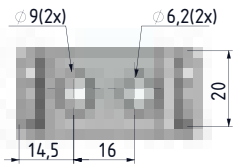

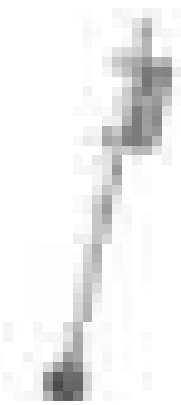

tel | +90 212 721 44 44 fax | +90 212 721 44 45

LY1 FLAT ROD GUIDE

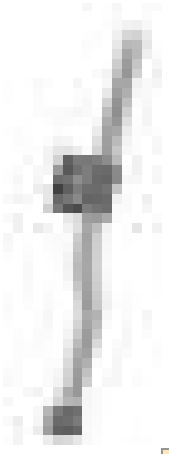

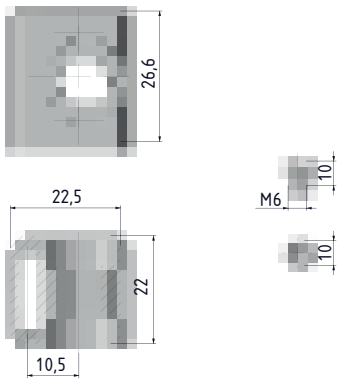

MATERIAL	FINISH	PRODUCT CODE
Plastic	No finish	LY120
Stainless Steel	No finish	LY140



NEW

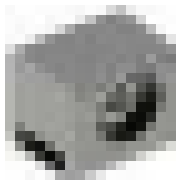

LY2 FLAT-ROD GUIDE

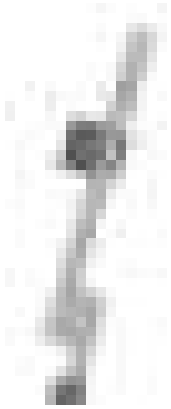

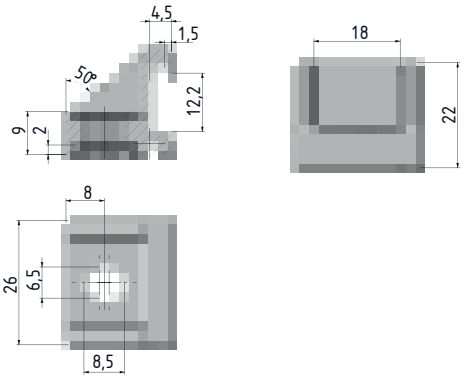

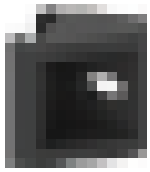

MATERIAL
Polyamide PA6 GFR 30

LY3 FLAT ROD GUIDE (Easy fixing)

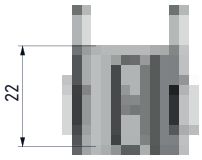

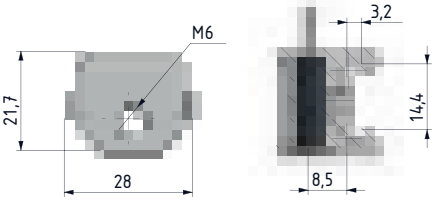

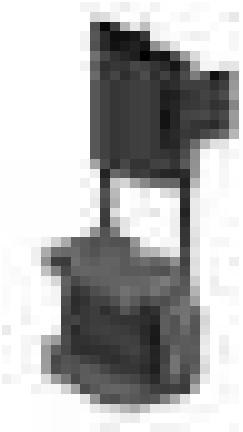

MATERIAL
Polyamide PA6 GFR 30

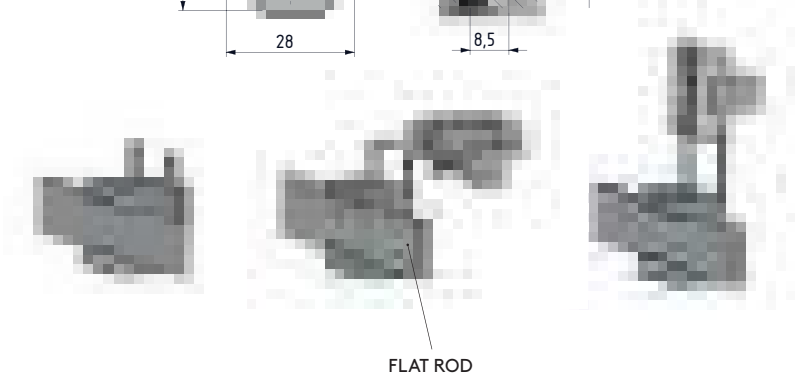

FLAT-ROD ACCESSORIES

FLAT-ROD GUIDE — LY40

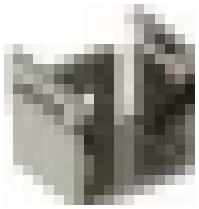

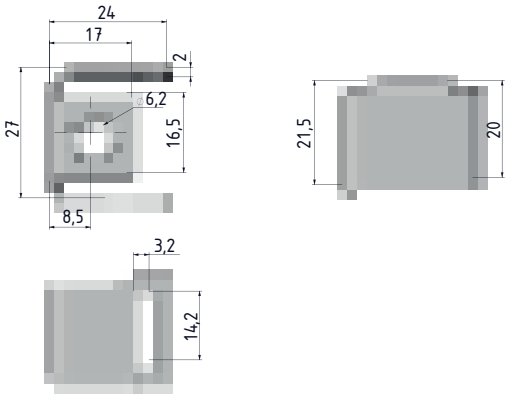

MATERIAL
Stainless steel

DUAL - ROLLER CATCHER — LKY1



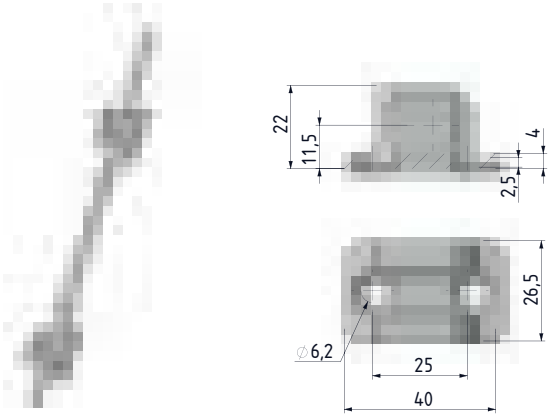

MATERIAL	FINISH	PRODUCT CODE
Plastic	No finish	LKY120
Zamak	Zinc plated	LKY113
Zamak	Black coated	LKY112
Stainless Steel	No finish	LKY140

DUAL - ROLLER CATCHER — LKY2

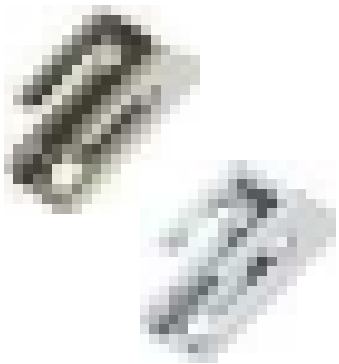

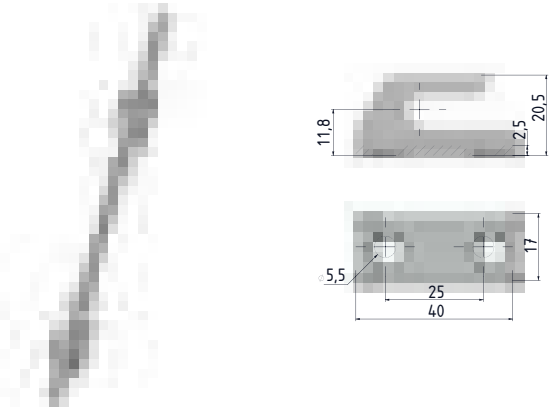

MATERIAL	FINISH	PRODUCT CODE
Steel	Zinc plated	LKY263
Stainless Steel	No finish	LKY240

tel | +90 212 721 44 44 fax | +90 212 721 44 45

RCC ROD CORNER CONTROL

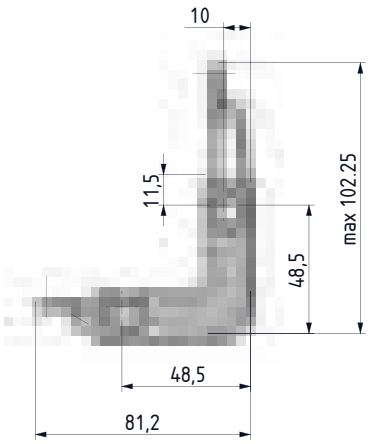

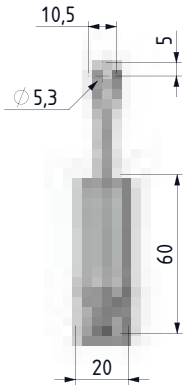

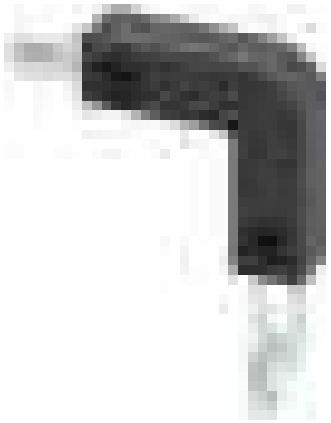

- Used to convert the vertical movement of the flat rods to horizontal movement
- 8 point locking is possible for security reasons

MATERIAL
BODY: Polyamide PA6 GFR 30
RODS: Zamak DIN-EN 1774-ZnAl4Cu1

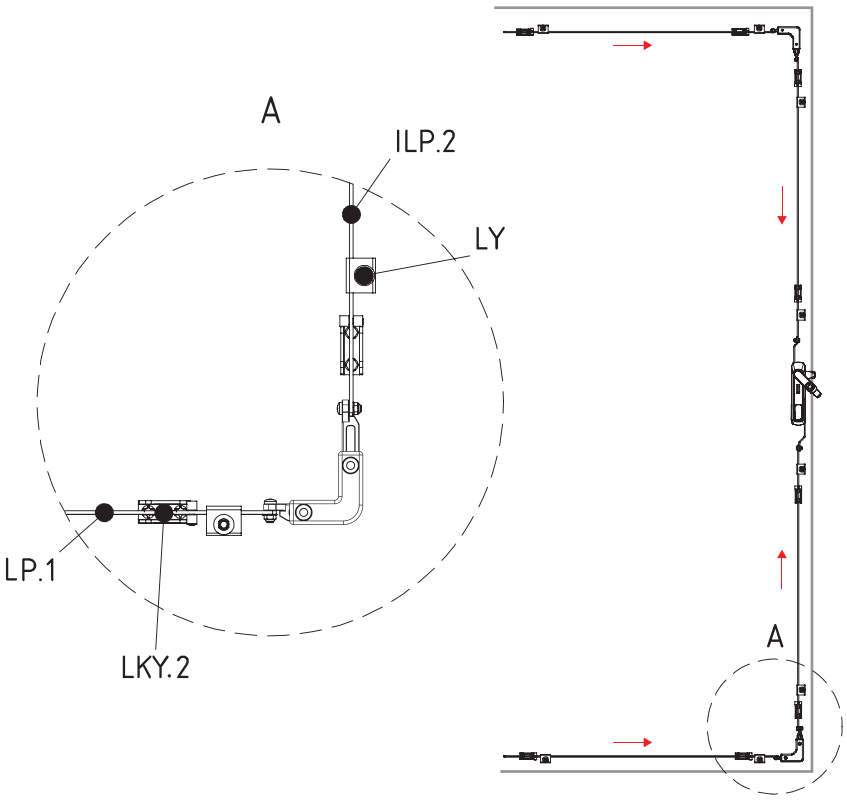

ILP MULTIPOINT LOCKING FLAT ROD

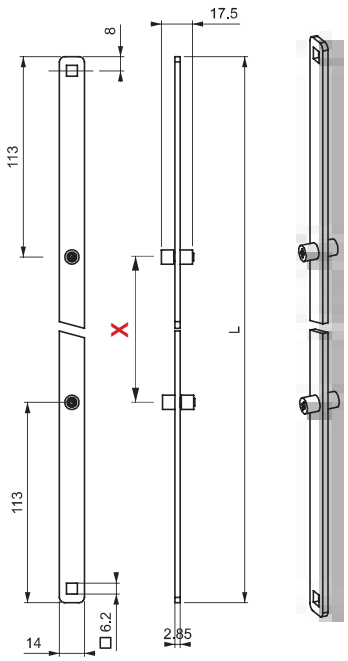

Group Code	Version	Length Between Pins
ILP	2	X

Please specify for different 'X' length

MATERIAL
Steel

FINISH
Zinc Plated

ROUND RODS

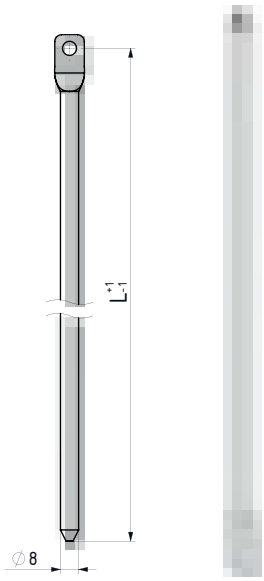

V: 1

L mm	PRODUCT CODE
400	IC 1-400
500	IC 1-500
600	IC 1-600
700	IC 1-700
800	IC 1-800
900	IC 1-900
1000	IC 1-1000

Application:
- With gear-box locks
- Locks with three-point cam

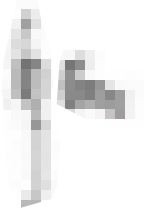

Accessories:
- Round-rod guide (CY)

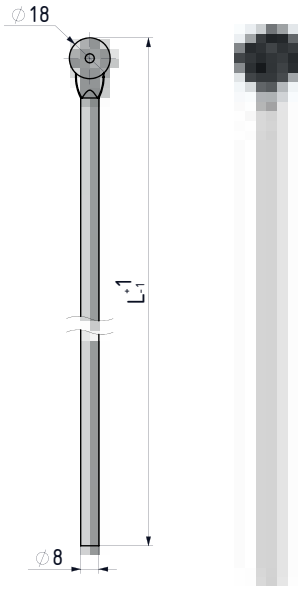

V: 2

L mm	PRODUCT CODE
400	IC 2-400
500	IC 2-500
600	IC 2-600
700	IC 2-700
800	IC 2-800
900	IC 2-900
1000	IC 2-1000

Application:
- With gear-box locks
- Locks with three-point cam



Accessories:
- Round-rod guide (CY)
- Rod adapter (CT)

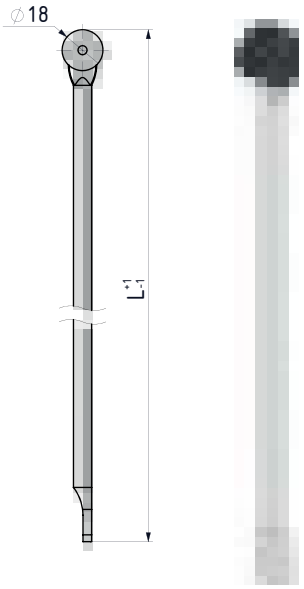

V: 3

L mm	PRODUCT CODE
400	IC 3-400
500	IC 3-500
600	IC 3-600
700	IC 3-700
800	IC 3-800
900	IC 3-900
1000	IC 3-1000

Application:
- Locks with three-point cam



Accessories:
- Round-rod guide (CY)
- Stainless steel version: page 430

Group Code	Version	Length
IC	V	L

For different 'L' lengths, please contact Essentra

tel | +90 212 721 44 44 fax | +90 212 721 44 45

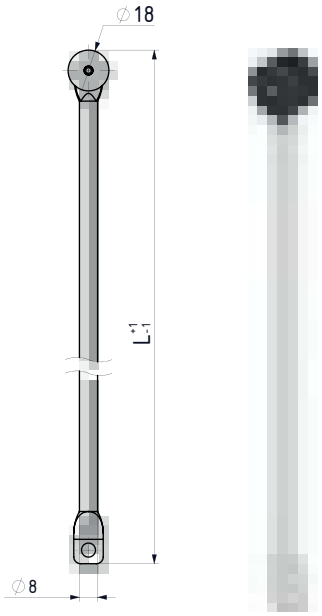

V: 4

L mm	PRODUCT CODE
400	IC 4-400
500	IC 4-500
600	IC 4-600
700	IC 4-700
800	IC 4-800
900	IC 4-900
1000	IC 4-1000

Application:
- With gearbox locks

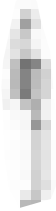

Accessories:
- Round-rod guide (CY)

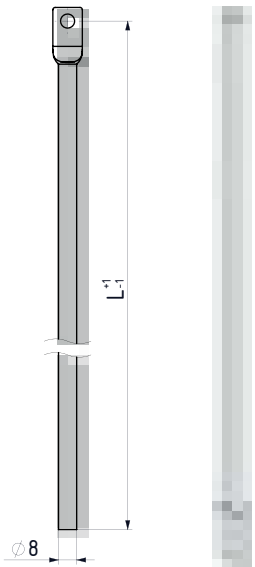

V: 5

L mm	PRODUCT CODE
400	IC 5-400
500	IC 5-500
600	IC 5-600
700	IC 5-700
800	IC 5-800
900	IC 5-900
1000	IC 5-1000

Application:
- With gear-box locks
- Locks with three-point cam



Accessories:
- Round-rod guide (CY)

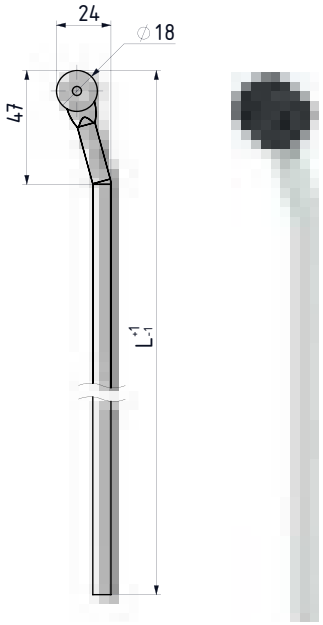

V: 6

L MM	PRODUCT CODE
400	IC 6-400
500	IC 6-500
600	IC 6-600
700	IC 6-700
800	IC 6-800
900	IC 6-900
1000	IC 6-1000

Application:
- With gear-box locks
- Locks with three-point cam



Accessories:
- Round-rod guide (CY)
- Rod adapter (CT)

- Stainless steel version:
page 542

Group Code	Version	Length
IC	V	L

For different 'L' lengths, please contact Essentra

FLAT RODS

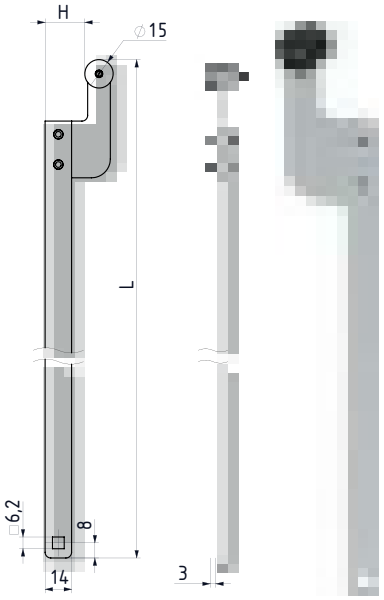

V: 1

H mm	L mm	PRODUCT CODE
27	1020	IL 1-27-1020
13	1020	IL 1-13-1020

Application:
- With gear-box locks



Accessories:
- Flat-rod guide (LY)

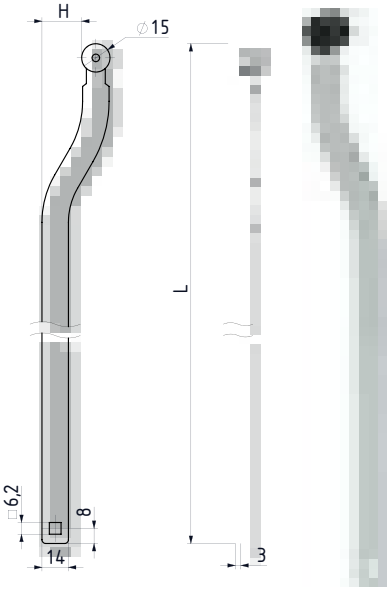

V: 2

H mm	L mm	PRODUCT CODE
21	1020	IL 2-21-1020
16	1020	IL 2-16-1020

Application:
- With gear-box locks

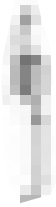

Accessories:
- Flat-rod guide (LY)

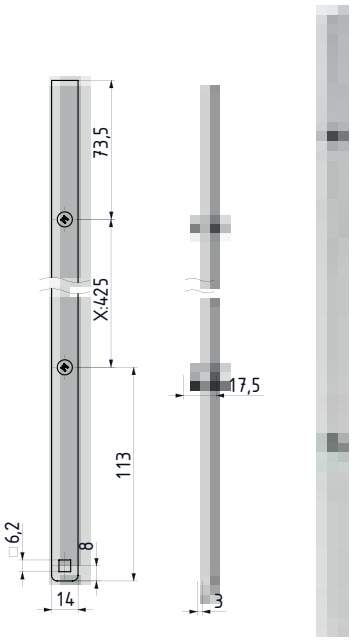

V:1

X mm	PRODUCT CODE
575	ILP 1-575

Application:
- With gear-box locks

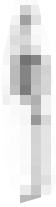

Accessories:
- Flat-rod guide (LY)
- Dual-roller catcher (LKY)

- Stainless steel version:
page 453

Group Code	Version	Offset	Length
IL	V	H	L

For different 'L' lengths, please contact Essentra Components

Group Code	Version	Length Between Pins
ILP	1	X

Please specify for different 'X' length

tel | +90 212 721 44 44 fax | +90 212 721 44 45

FLAT ROD

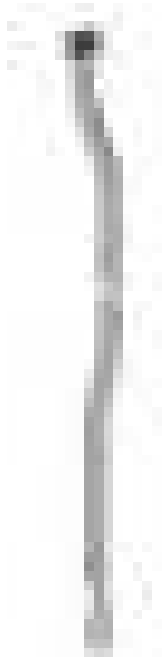

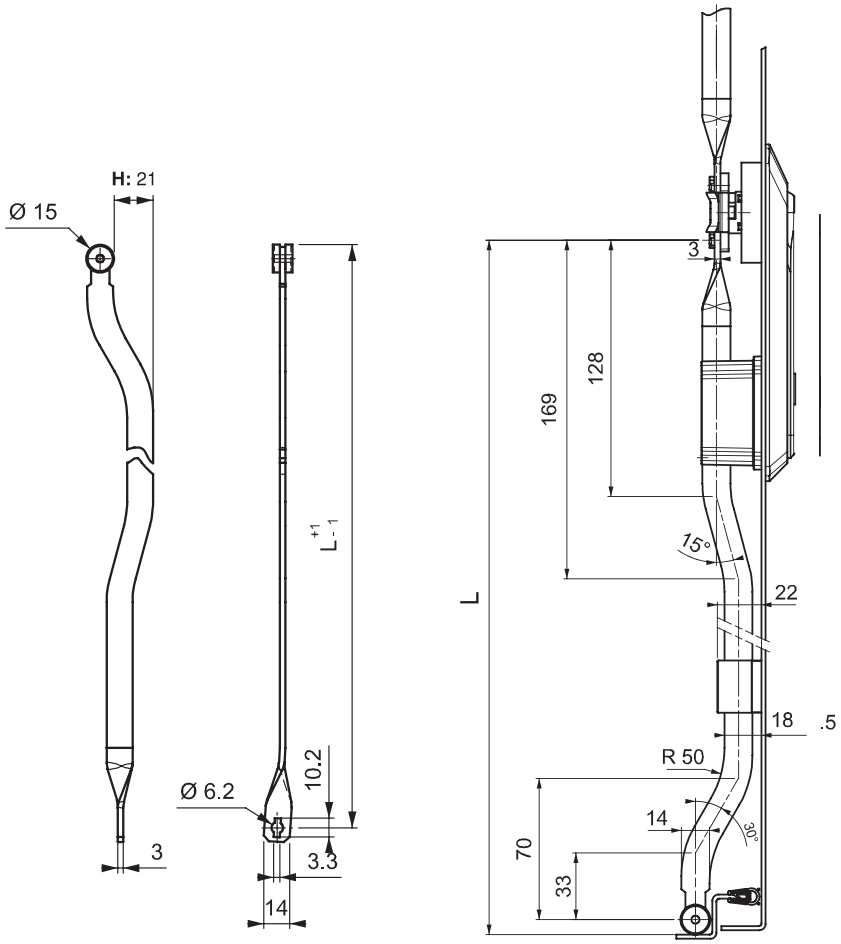

- T-shape rivets on cam provide easy assembly of rods.

MATERIAL
Steel

FINISH
Zinc plated

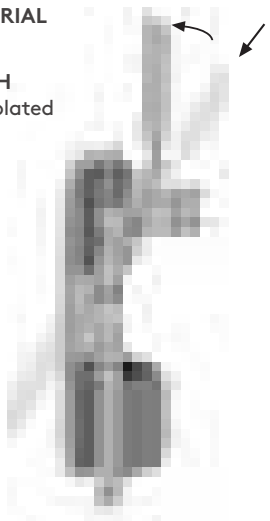

Group Code	Version	Offset	Length
IL	3	21	L

Please specify for different 'L' length

3-POINT CAM

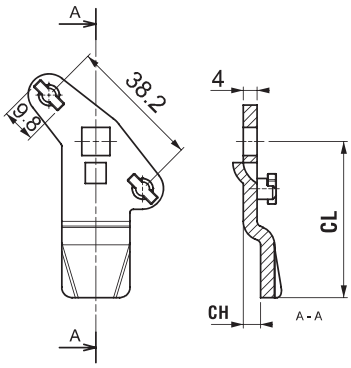

STOCK CODE	CH	CL
34003591Y	5	45
34003592Y	20	45



FLAT ROD



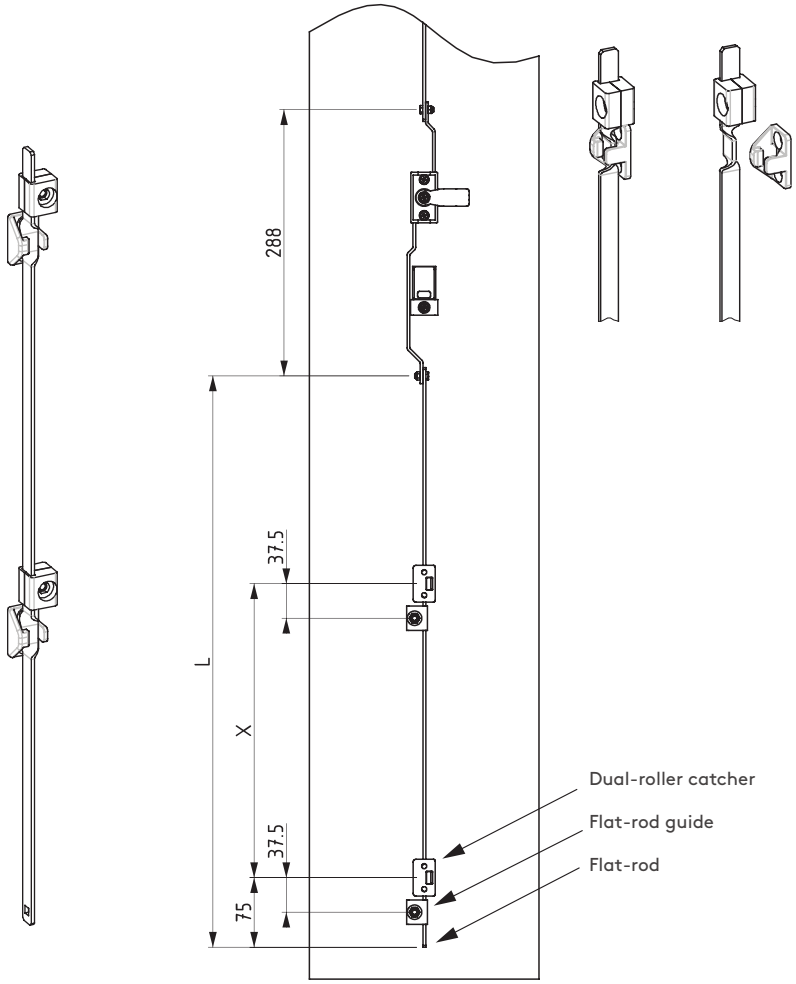

MATERIAL
Steel

FINISH
Zinc plated

DUAL-ROLLER CATCHER

LKY3

Group Code	Version	Length	Locking
IL	4	L	X

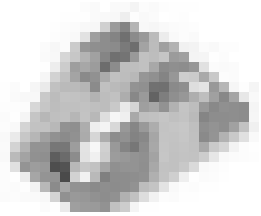

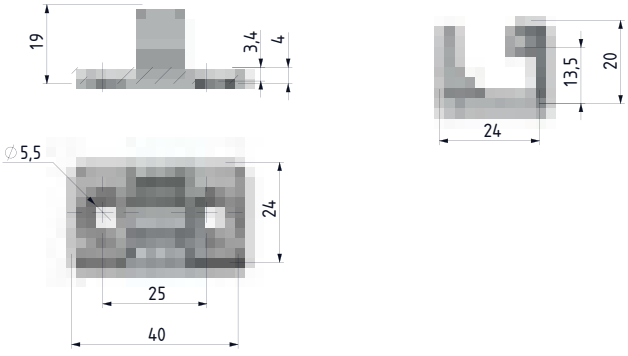

MATERIAL
Zamak DIN-EN 1774-ZnAl4Cu1

FINISH
Zinc plated

tel | +90 212 721 44 44 fax | +90 212 721 44 45

POLYAMIDE KEYS

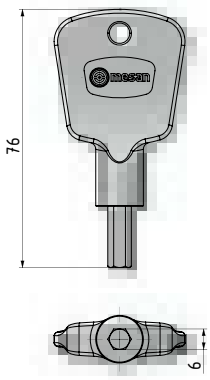

66966
6 mm Hexagon

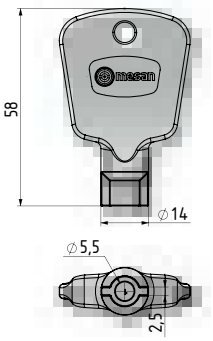

66915
5 mm Double bit

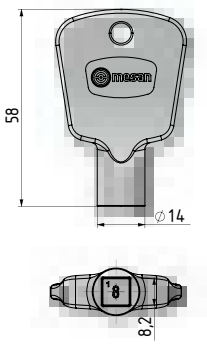

66928
8 mm Square

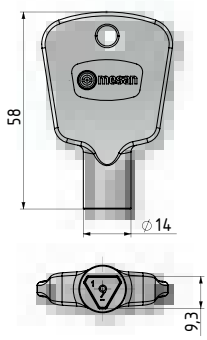

66939
9 mm Triangular

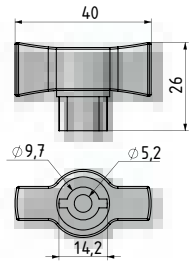

26915
5 mm Double bit

⚠ **Not:** Suitable for 040 & 540 compression locks

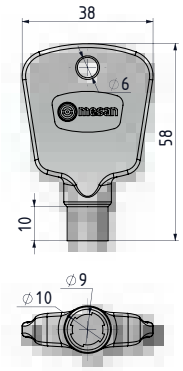

66993
Tubular key

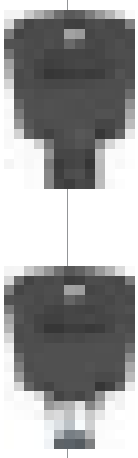

⚠ **Not:** Suitable for 140 compression lock

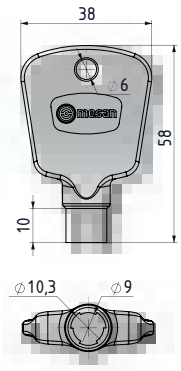

76993
Tubular key

METAL KEYS

⚠ **Not:** Suitable for 040 & 540 compression locks

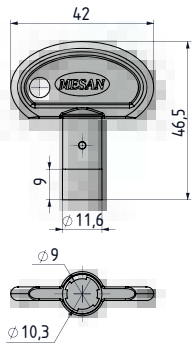

Tubular key

Chrome plated: **36911**
Black coated : **36912**



⚠ **Not:** Suitable for 140 compression lock

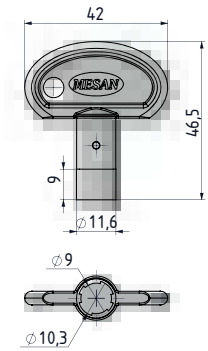

Tubular key

Chrome plated: **46911**
Black coated : **46912**

METAL KEYS (LONG)

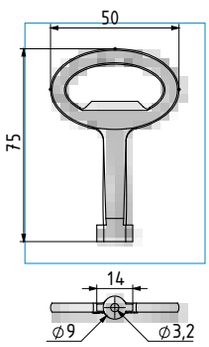

36813
3 mm Double bit

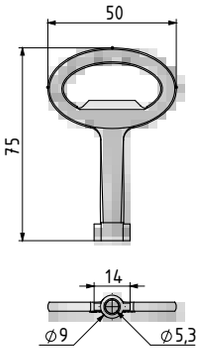

36815
5 mm Double bit

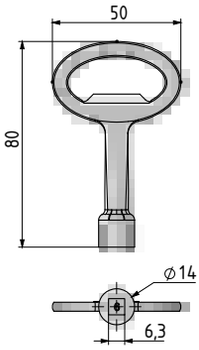

36826
6 mm Square

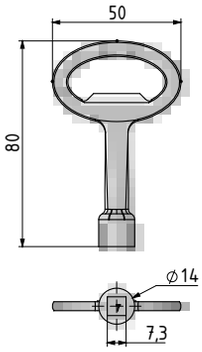

36827
7 mm Square

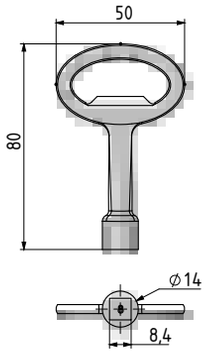

36828
8 mm Square

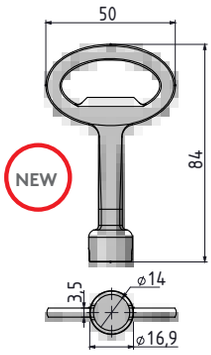

36886
Ebr

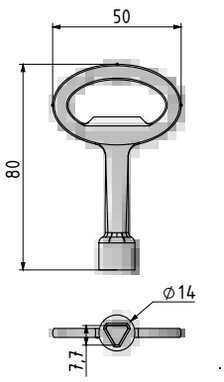

36837
7 mm Triangular

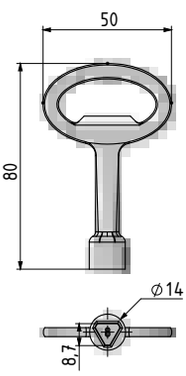

36838
8 mm Triangular

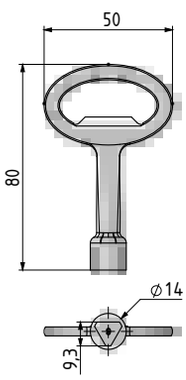

36839
9 mm Triangular

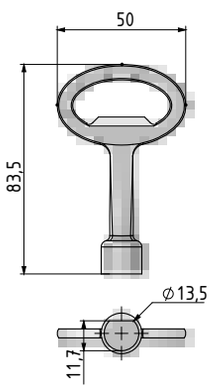

36891
Eastern

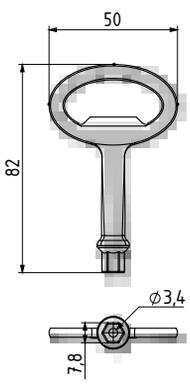

36868
8 mm Hexagon
High security



MULTIPLE KEYS (METAL)

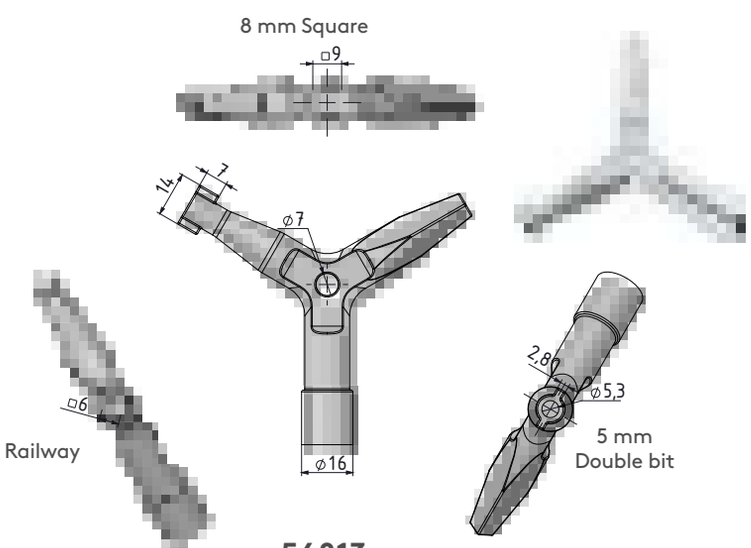

56813
Multiple key

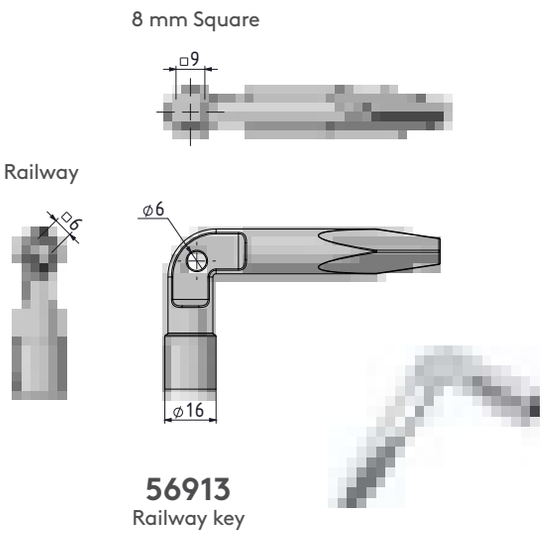

56913
Railway key

tel | + 90 212 721 44 44 fax | + 90 212 721 44 45

METAL KEYS (SHORT)

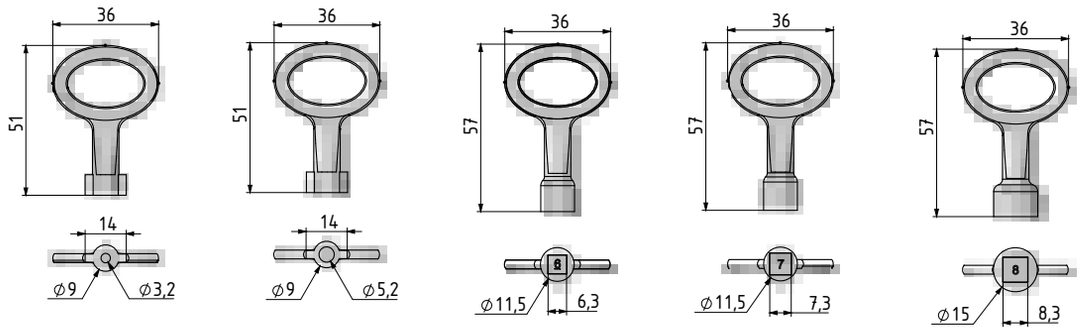

26713
3 mm Double bit

26715
5 mm Double bit

26726
6 mm Square

26727
7 mm Square

26728
8 mm Square



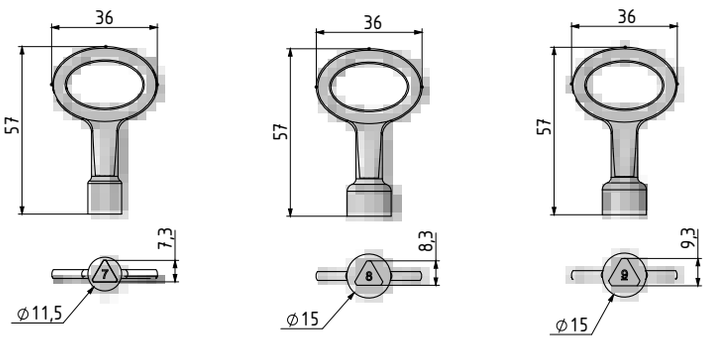

26737
7 mm Triangular

26738
8 mm Triangular

26739
9 mm Triangular

MULTIPLE KEYS (METAL)

NEW

5 mm Double bit

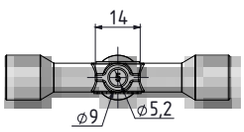

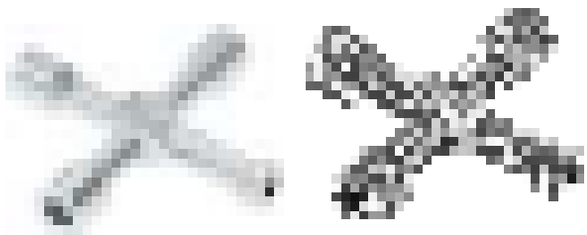

8 mm Square

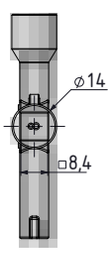

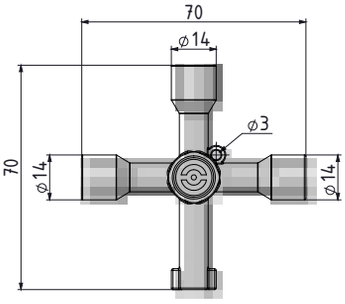

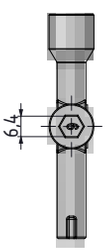

6 mm Hexagon

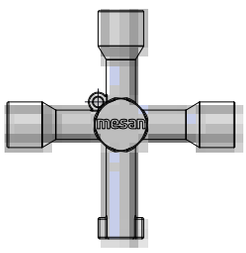

9 mm Triangular

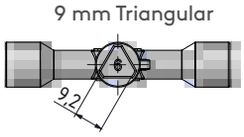

Chrome plated: **66811**
Black coated : **66812**

FAST FIND INDEX

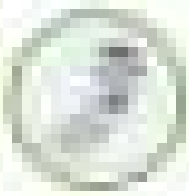
195

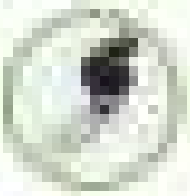
196

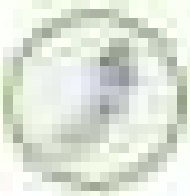
197

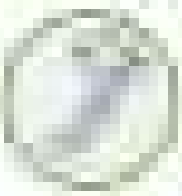
198

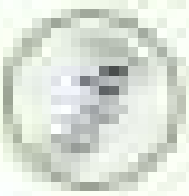
199

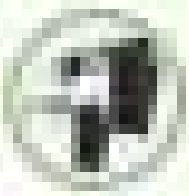
200-201


202

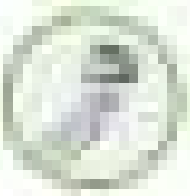
203

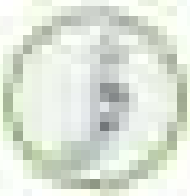
204

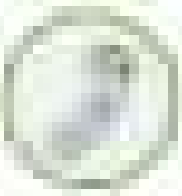
205

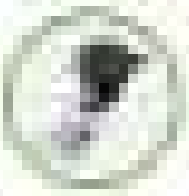
206

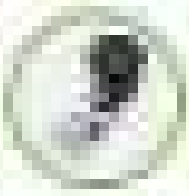
207


208


209

NEW


210-211


212

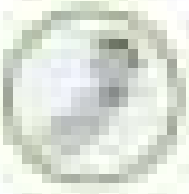
213


214

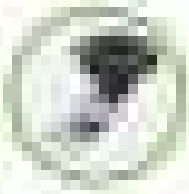
215

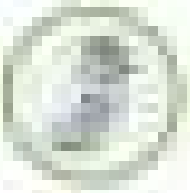
216

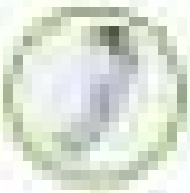
217

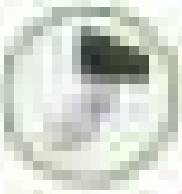
218


219


219

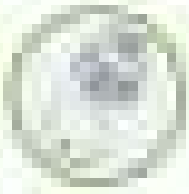
220


221

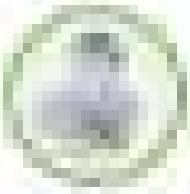
222

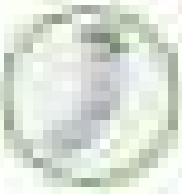
223

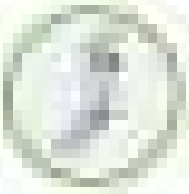
224

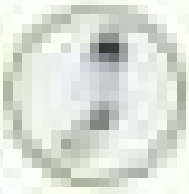
225


226


227


228

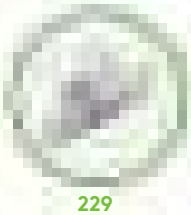
229


230


231


232-233


234


235


236

NEW

237

238

239

240

NEW

241

NEW

242

243,245

244



QUARTER-TURN LOCKS

192-245

mesan
ESSENTRA COMPONENTS

e-mail | info@mesanlocks.com web | www.mesanlocks.com

QUARTER-TURN LOCKS

M	F	
1	1	Zamak / chrome plated
1	2	Zamak / black coated
2	0	Polyamide / No finish

M MATERIAL **F** FINISH **DD** DRIVER CODE

DRIVERS

3 mm Double bit	M	F	Stock code
DD 13 	1	1	30101127Y
	1	2	30101126Y
	2	0	30102012Y

5 mm Double bit	M	F	Stock code
DD 15 	1	1	30101099Y
	1	2	30101125Y
	2	0	30102001Y

8 mm Square	M	F	Stock code
DD 28 	1	1	30101113Y
	1	2	30101065Y
	2	0	30102011Y

6 mm Square	M	F	Stock code
DD 26 	1	1	30101058Y
	1	2	30101139Y
	2	0	30102009Y

7 mm Square	M	F	Stock code
DD 27 	1	1	30101039Y
	1	2	30101138Y
	2	0	30102010Y

9 mm Triangular	M	F	Stock code
DD 39 	1	1	30101066Y
	1	2	30101140Y
	2	0	30102007Y

7 mm Triangular	M	F	Stock code
DD 37 	1	1	30101124Y
	1	2	30101120Y
	2	0	30102008Y

8 mm Triangular	M	F	Stock code
DD 38 	1	1	30101114Y
	1	2	30101064Y
	2	0	30102006Y

Slot	M	F	Stock code
DD 52 	1	1	30101636Y
	1	2	30101637Y
	2	0	•

Slot (2x4)	M	F	Stock code
DD 42 	1	1	30101146Y
	1	2	30101149Y
	2	0	30102005Y

8 mm Square Slot	M	F	Stock code
DD 58 	1	1	30101175Y
	1	2	30101176Y
	2	0	•

10 mm Hexagon female	M	F	Stock code
DD 61 	1	1	30101169Y
	1	2	30101170Y
	2	0	•

8 mm Hexagon female	M	F	Stock code
DD 68 	1	1	30101195Y
	1	2	30101196Y
	2	0	•

5x10 Slot	M	F	Stock code
DD 71 	1	1	30101188Y
	1	2	30101189Y
	2	0	•

6 mm Square	M	F	Stock code
DD 76 	1	1	30101173Y
	1	2	30101174Y
	2	0	•

Railway	M	F	Stock code
DD 88 	1	1	30101171Y
	1	2	30101172Y
	2	0	•

Eastern	M	F	Stock code
DD 91 	1	1	30101177Y
	1	2	30101178Y
	2	0	•

Tork (T-30)	M	F	Stock code
DD 92 	1	1	30101213Y
	1	2	•
	2	0	•

11 mm Hexagon male	M	F	Stock code
DD 97 	1	1	30101675Y
	1	2	30101676Y
	2	0	•

Fiat	M	F	Stock code
DD 95 	1	1	30101677Y
	1	2	30101678Y
	2	0	•

NEW EBR	M	F	Stock code
DD 86 	1	1	30101939Y
	1	2	•
	2	0	•

HOUSING, NUT, SEALING WASHER, SPRING, SCREW, O-RING

Housing	M	F	Stock code
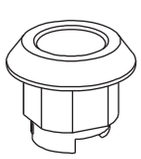	1	1	30301019Y
	1	2	30301035Y
	1	1	*30301226Y
	1	2	*30301283Y
	2	0	30302061Y

Nut	M	F	Stock code
	1	1	30501015Y
	2	0	30502002Y

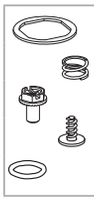	Sealing Washer	30802021Y
	Spring	30703001Y
	Screw (6x10 Kombi)	30603002Y
	Screw (5x11 RYSB)	30603055Y
	0'Ring (IP 65)	30802002Y

* Suitable for Railway driver

tel | + 90 212 721 44 44 fax | + 90 212 721 44 45

060 QUARTER TURN – SPRING LOADED

RoHS

IP 65

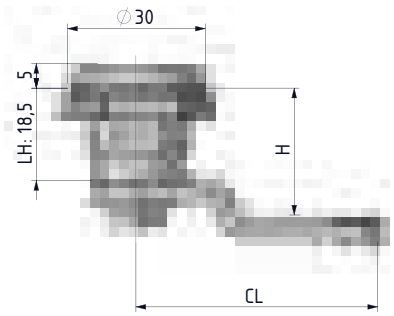

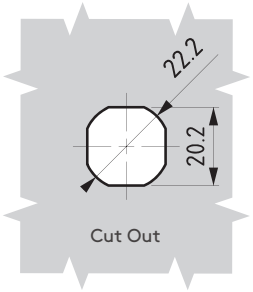

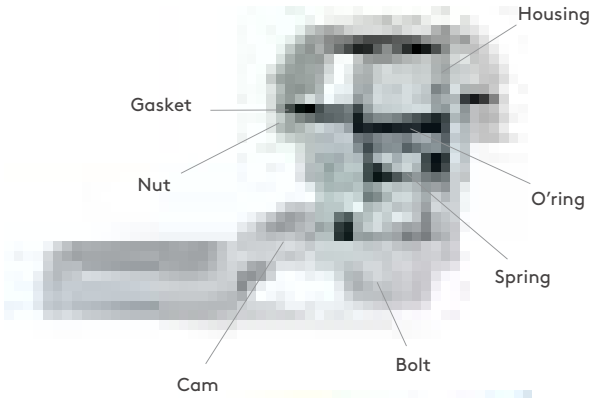



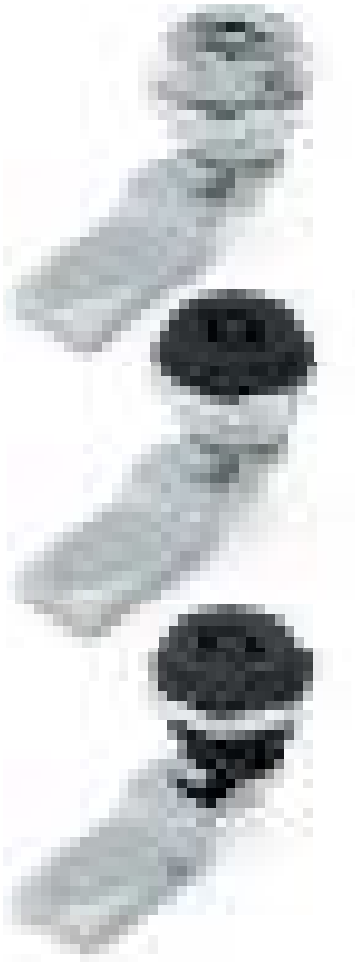

- **Stainless steel version: page: 458**
- Specially designed internal spring provides 1.5 mm of compression
- Cam does not rotate beyond quarter turn due to stop lip

MATERIAL

HOUSING:	Zamak DIN-EN 1774-ZnAl4Cu1 or PA6 GFR 30
DRIVER:	Zamak DIN-EN 1774-ZnAl4Cu1 or PA6 GFR 30
CAM:	Steel or plastic
GASKET:	Rubber

FINISH
Chrome plated or black coated

MATERIAL	M	FINISH	F
Zamak	1	Chrome plated	1
		Black coated	2
Plastic	2	No finish	0

Group Code	Housing		Driver		Driver No	Cam
060	M	F	M	F	DD	CC

For cams please check pages: 170 - 171
For rods please check pages: 178 - 188
For keys please check pages: 189 - 191

QUARTER TURN – WING KNOB

062



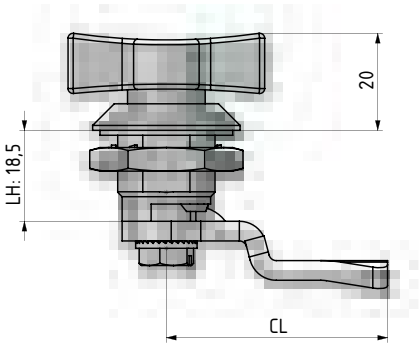

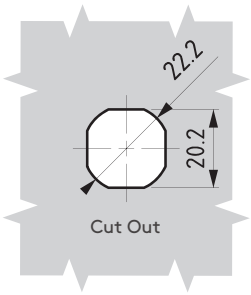



- Wing operates lock and serves as knob

MATERIAL

HOUSING:	Zamak DIN-EN 1774-ZnAl4Cu1 or PA6 GFR 30
KNOB:	Zamak DIN-EN 1774-ZnAl4Cu1 or PA6 GFR 30
CAM:	Steel or Plastic
GASKET:	Rubber

FINISH
Chrome or Black coated

MATERIAL	M	FINISH	F
Zamak	1	Chrome plated	1
		Black coated	2
Plastic	2	No finish	0

Group Code	Housing		Knob		Cam
062	M	F	M	F	CC

For cams please check pages: 170 - 171
For rods please check pages: 178 - 188

tel | +90 212 721 44 44 fax | +90 212 721 44 45

362 QUARTER TURN – WING KNOB

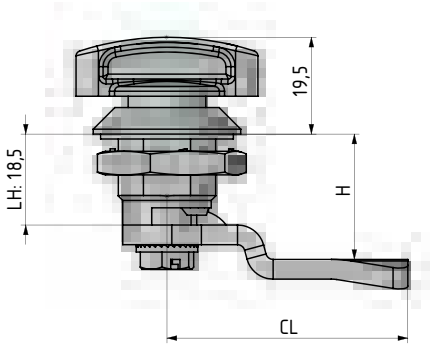

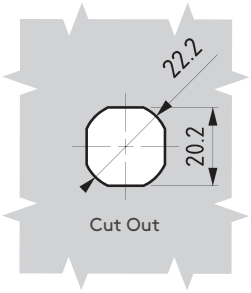

RoHS

IP 65





- Wing operates lock and serves as knob

MATERIAL

HOUSING:	Zamak DIN-EN 1774-ZnAl4Cu1 or PA6 GFR 30
KNOB:	Zamak DIN-EN 1774-ZnAl4Cu1 or PA6 GFR 30
CAM:	Steel or plastic
GASKET:	Rubber

FINISH
Chrome plated or black coated

MATERIAL	M	FINISH	F
Zamak	1	Chrome plated	1
		Black coated	2
Plastic	2	No finish	0

Group Code	Housing		Knob		Cam
362	M	F	M	F	CC

For cams please check pages: 170 - 171
For rods please check pages: 178 - 188

PADLOCKABLE WING KNOB 562



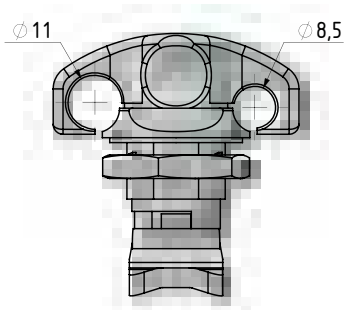

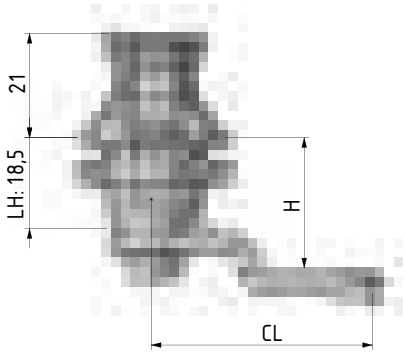

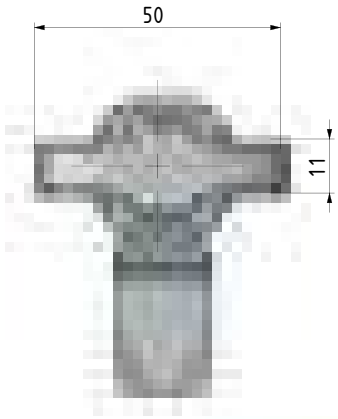

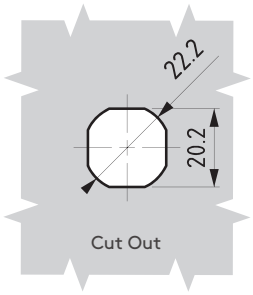



- **Stainless Steel version: page 471**
- Shackle diameter is
  for 11 mm hole:
  min. 8.5 mm
  max. 10 mm
  for 8.5 mm hole:
  min. 6 mm
  max. 7.5 mm

MATERIAL

HOUSING:	Zamak DIN-EN 1774-ZnAl4Cu1
KNOB:	Zamak DIN-EN 1774-ZnAl4Cu1
CAM:	Steel

FINISH
Chrome plated or black coated

FINISH	F
Chrome plated	1
Black coated	2

Group Code	Finish	Cam
562	F	CC

For cams please check pages: 170 - 171
For rods please check pages: 178 - 188

tel | +90 212 721 44 44 fax | +90 212 721 44 45

262 PADLOCKABLE WING KNOB

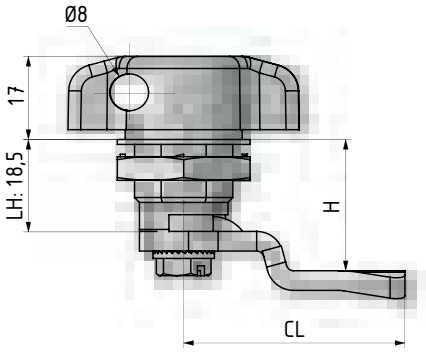

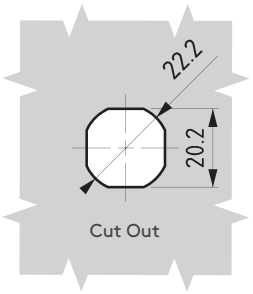

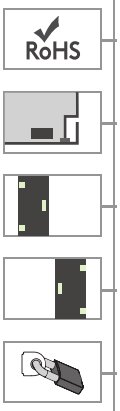





- Padlockable wing knob. Maximum shackle diameter 6 mm

MATERIAL

HOUSING:	Zamak DIN-EN 1774-ZnAl4Cu1
KNOB:	Zamak DIN-EN 1774-ZnAl4Cu1
CAM:	Steel

FINISH
Chrome plated or black coated

FINISH	F
Chrome plated	1
Black coated	2

DOOR DIRECTION	
Right hand	001
Left hand	002

Group Code	Finish	Cam	Door Direction
262	F	CC	

For cams please check pages: 170 - 171
For rods please check pages: 178 - 188

QUARTER TURN-PADLOCKABLE

662



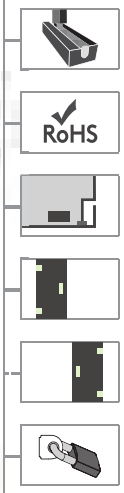

V:1

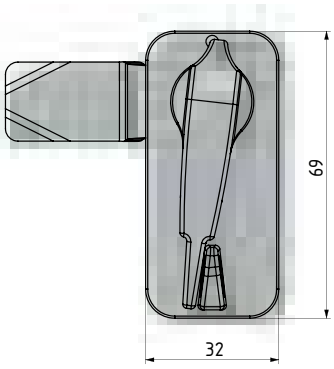

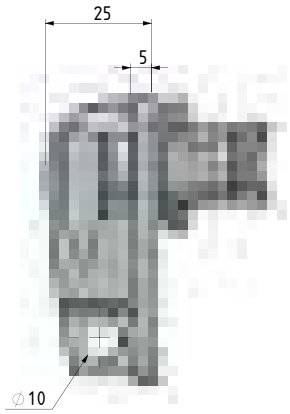

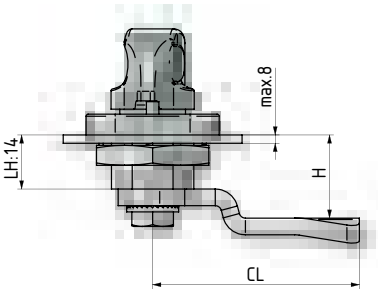

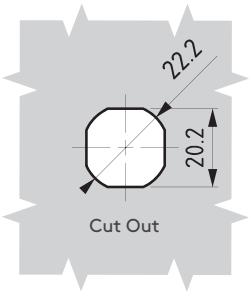



- Standard cams without stopper required for these locks
- Maximum shackle diameter 8 mm

MATERIAL

HOUSING:	Zamak DIN-EN 1774-ZnAl4Cu1
KNOB:	Zamak DIN-EN 1774-ZnAl4Cu1
CAM:	Steel

FINISH
Chrome plated or black coated

MATERIAL	M	FINISH	F
Zamak	1	Chrome plated	1
		Black coated	2

DOOR DIRECTION	
Right hand	001
Left hand	002

Group Code	Version	Material	Finish	Cam	Door Direction
662	1	1	F	CC	

For cams please check pages: 170 - 171

tel | +90 212 721 44 44 fax | +90 212 721 44 45

V: 2

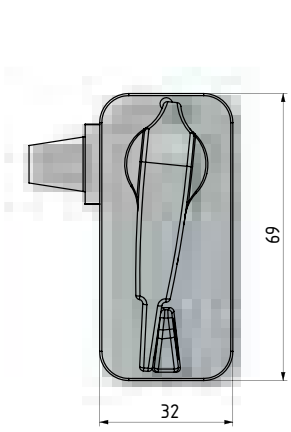

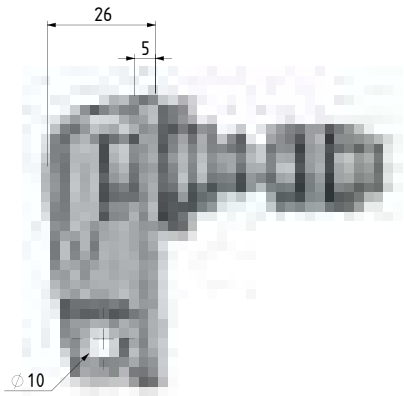

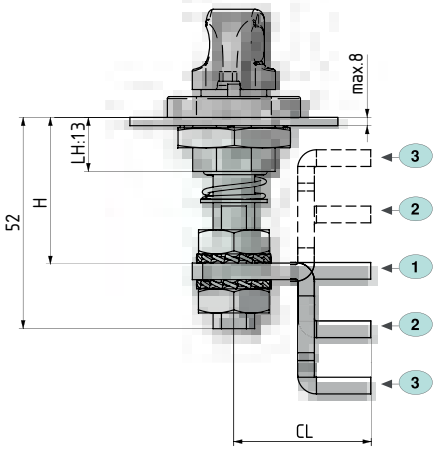

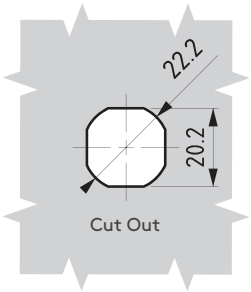

CAM	CC	CH	CL	POSITION	H: GRIP MIN	H: GRIP MAX
1	01	0	33	Flat	30	41,5
2	02	14	33	Up	16	27,5
				Down	44	55,5
3	03	27,5	33	Up	2,5	14
				Down	57,5	69

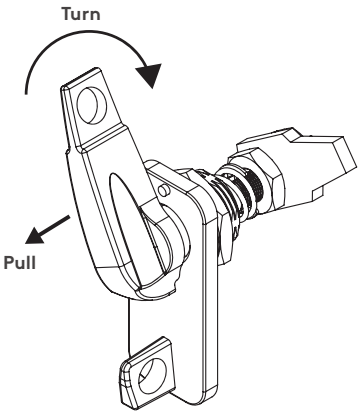

Left hand & Right hand
Pull and turn the knob

MATERIAL	M	FINISH	F
Zamak	1	Chrome plated	1
		Black coated	2

Group Code	Version	Material	Finish	Cam
662	2	1	F	CC

662 QUARTER TURN-PADLOCKABLE

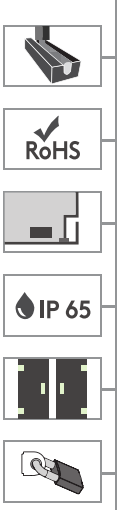



- Adjustable cam
- Three different cam alternatives available
- Maximum shackle diameter 8 mm
- Suitable for left-hand and right-hand applications

MATERIAL

HOUSING: Zamak DIN-EN 1774-ZnAl4Cu1
KNOB: Zamak DIN-EN 1774-ZnAl4Cu1
CAM: Steel

FINISH

Chrome plated or black coated

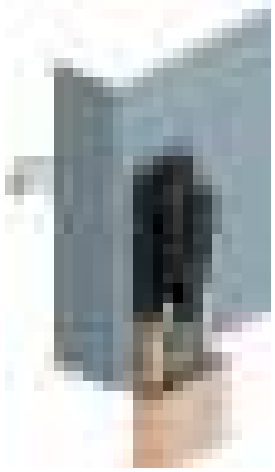

PADLOCKABLE - 'L' HANDLE

211



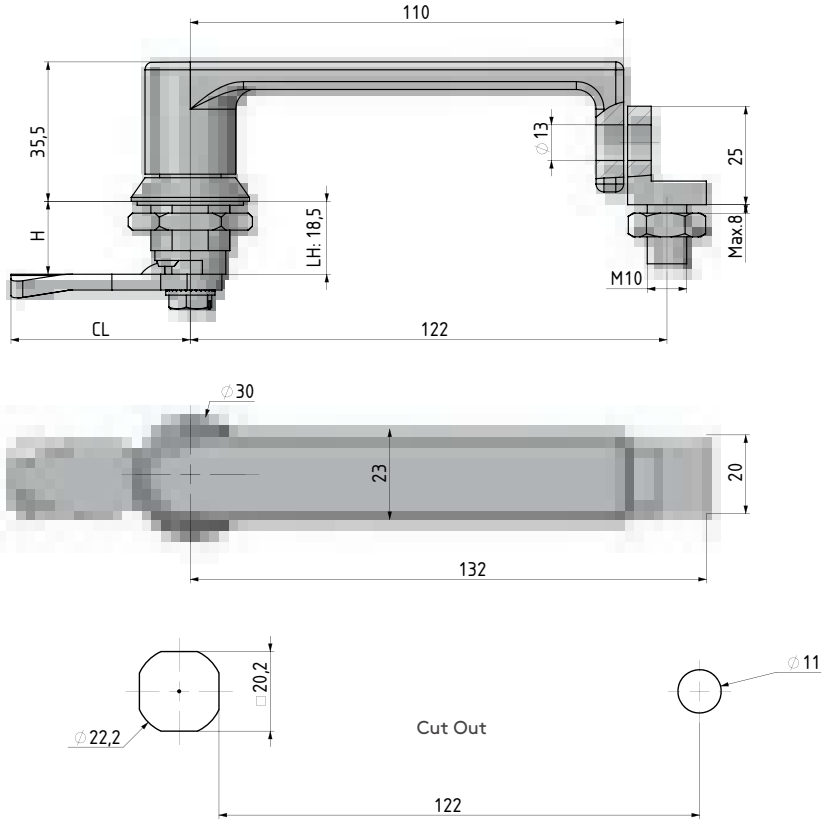

- **Stainless Steel version: page 470**
- Padlockable steel lock can be used for outdoor enclosures.
- Suitable for hygenic cabinets and electrical enclosures.

MATERIAL

HOUSING:	Zamak DIN-EN 1774-ZnAl4Cu1
KNOB:	Zamak DIN-EN 1774-ZnAl4Cu1
CAM:	Steel
GASKET:	Rubber



MATERIAL	M	FINISH	F
Zamak	1	Chrome plated	1
		Black coated	2

Group Code	Housing		Handle		Cam
211	1	F	1	F	CC

For cams please check pages: 170 - 171

tel | +90 212 721 44 44 fax | +90 212 721 44 45

960 QUARTER TURN - MODULER HANDLE

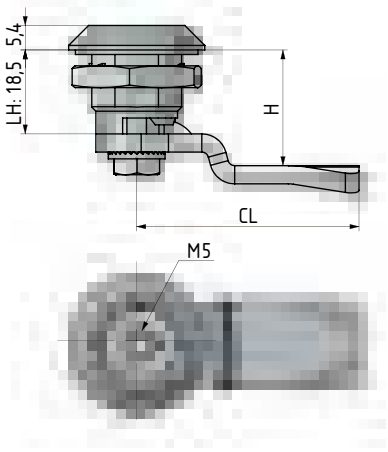

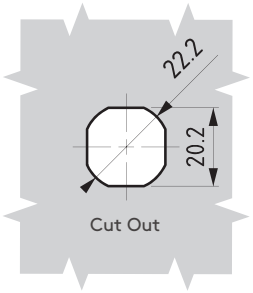

RoHS

IP 65

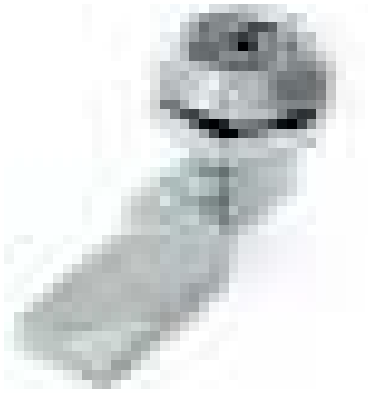

- Two different plastic handle options are available.
- Handles and lock can be ordered separately and assembled by single screw

MATERIAL

HOUSING:	Zamak DIN-EN 1774-ZnAl4Cu1
DRIVER:	Zamak DIN-EN 1774-ZnAl4Cu1
CAM:	Steel
GASKET:	Rubber

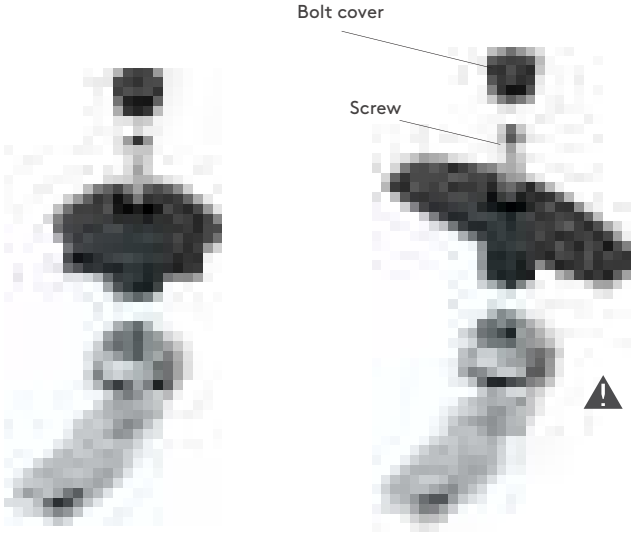

Note: Supplied with screw and cover

HANDLES

Star handle

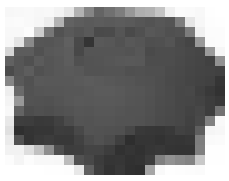

320.02.218

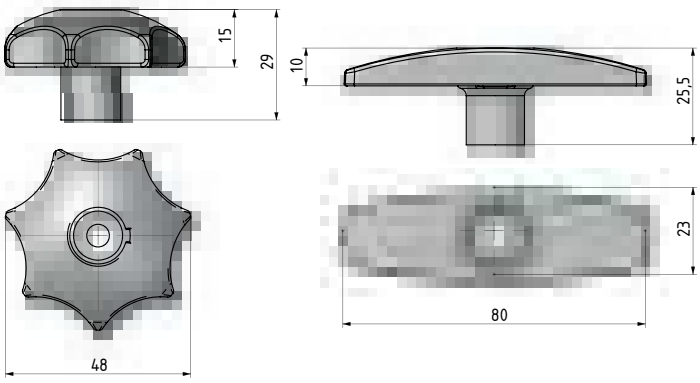

'T' handle

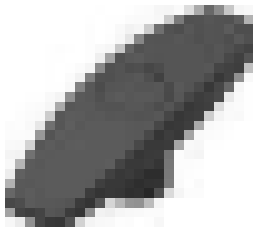

320.02.219

MATERIAL	M	FINISH	F
Zamak	1	Chrome plated	1
		Black coated	2

SPECIFICATIONS	HANDLE
No handle	00
Star handle	01
'T' handle	02

- Handles can be order separately

MATERIAL

HANDLE : PA6 GFR 30
COVER : PA6 GFR 30
BOLT : STEEL

Group Code	Handle	Housing		Driver		Driver No	Cam
960		1	F	1	F	39	CC

For cams please check pages: 170 - 171

SECURE QUARTER TURN

361

RoHS

IP 65

L R

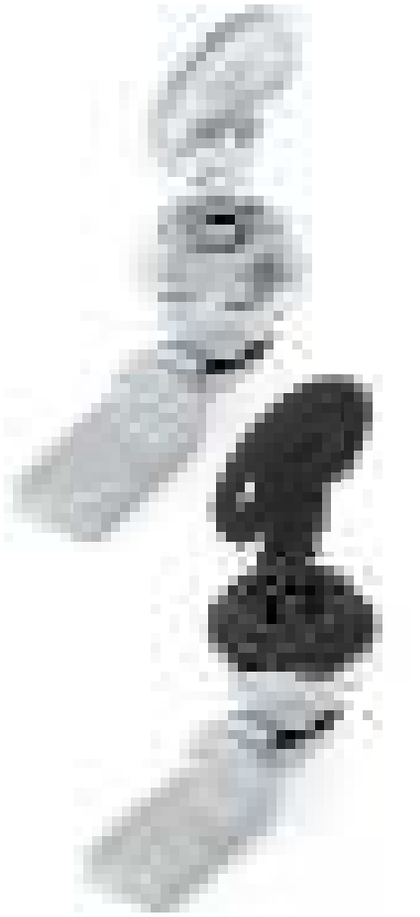

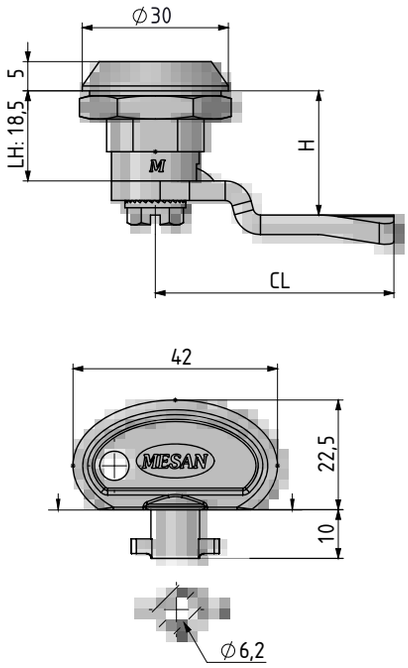

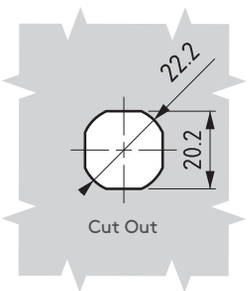

- When lock is open, key functions as a knob
- Key is specific to this lock and should be ordered at same time

MATERIAL

HOUSING:	Zamak DIN-EN 1774-ZnAl4Cu1
DRIVER:	Zamak DIN-EN 1774-ZnAl4Cu1
CAM:	Steel
GASKET:	Rubber

FINISH

Chrome plated or black coated

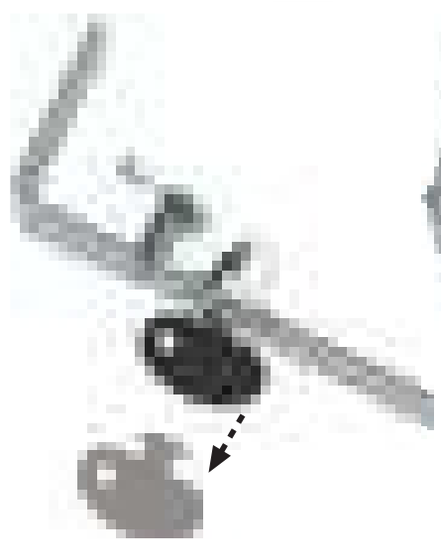

Key is removable at locked position



Key is removable at locked position

MATERIAL	M	FINISH	F
Zamak	1	Chrome plated	1
		Black coated	2

Group Code	Material	Finish	Cam
361	1	F	CC

Lock

Group Code	Material	Finish
167	1	F

Key

For cams please check pages: 170 - 171

tel | + 90 212 721 44 44 fax | + 90 212 721 44 45

461

SECURE QUARTER TURN

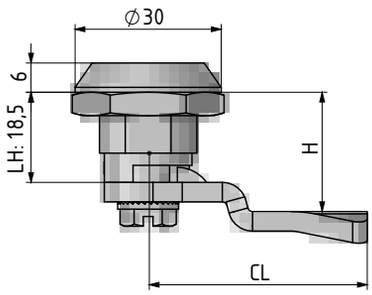

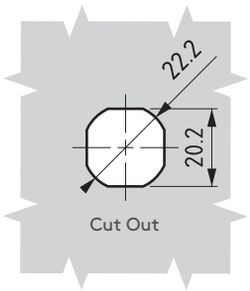









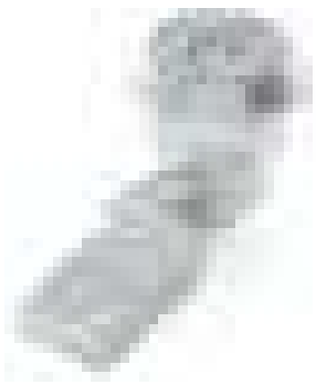

- When lock is open, key functions as a knob.

MATERIAL

HOUSING:	Zamak DIN-EN 1774-ZnAl4Cu1
DRIVER:	Zamak DIN-EN 1774-ZnAl4Cu1
CAM:	Steel
GASKET:	Rubber



Key is removable at locked position





Key is not removable at open position, it works like a knob.

SPECIAL KEYS



368-96
8 mm Square



368-95
Fiat

DRIVERS		
5 mm Double bit	8 mm Square	Fiat
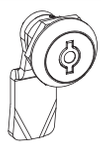	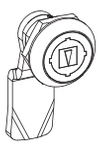	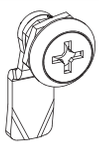
15	86	95

MATERIAL	M	FINISH	F
Zamak	1	Chrome plated	1

DOOR DIRECTION	
Right hand	001
Left hand	002

Group Code	Housing		Driver		Driver No	Cam	Door Direction
461	1	1	1	1	DD	CC	

For cams please check pages: 170 - 171

QUARTER TURN – EASY FIXING 560

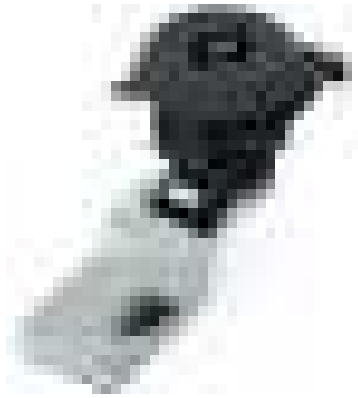

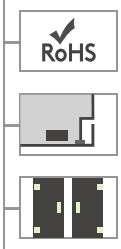

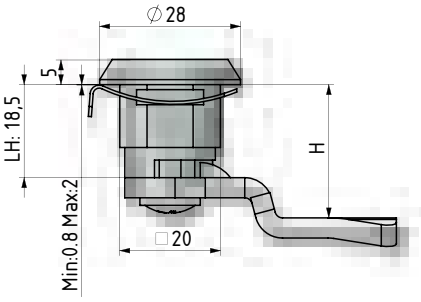

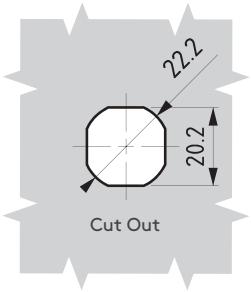

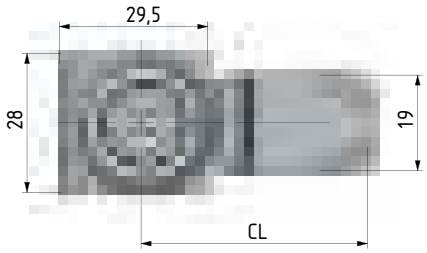

- Easy assembly by clips
- Specially designed internal spring provides 1.5 mm torsion
- Can be used for panel thickness 0.8 to 2 mm
- Please contact Essentra Components for special colours

MATERIAL

HOUSING:	PA6 GFR 30
DRIVER:	Zamak DIN-EN 1774-ZnAl4Cu1 or PA6 GFR 30
CAM:	Steel or plastic

Easy fixing



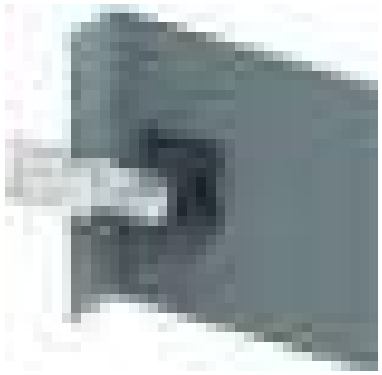

MATERIAL	M	FINISH	F
Zamak	1	Chrome plated	1
		Black coated	2
Plastic	2	No finish	0

Group Code	Housing		Driver		Driver No	Cam
560	2	0	M	F	DD	CC

For cams please check pages: 170 - 171
For drivers please check page: 194
For keys please check pages: 189 - 191

tel | +90 212 721 44 44 fax | +90 212 721 44 45

660 QUARTER TURN – EASY FIXING

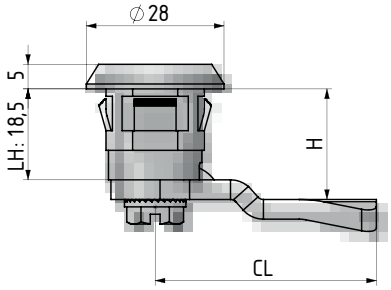

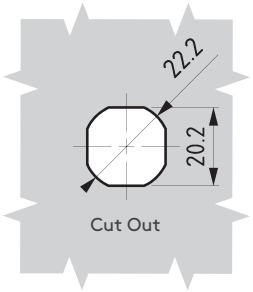

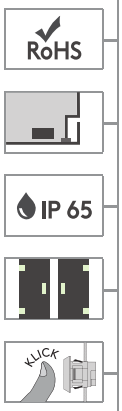



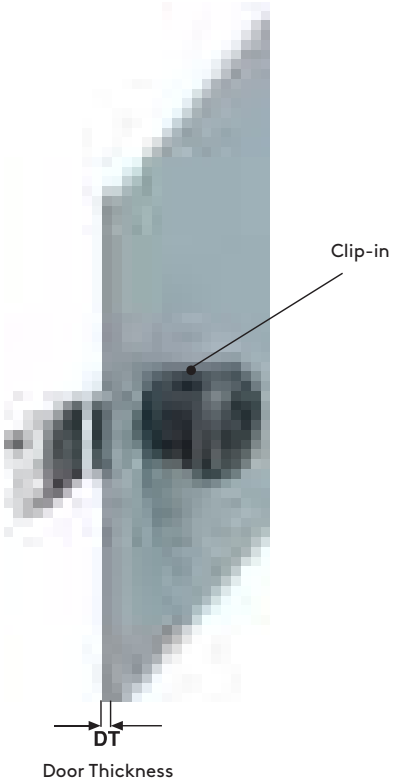

Door Thickness

Door Thickness (DT)	Version
0.8 -1.2 mm	1
1.2 -1.5 mm	2
1.5 - 2 mm	3 *

* in this version IP 65 is not available

- Easy assembly by clips
- Mounting nut not required.
- Specially designed internal spring provides 1.5 mm torsion
- Can be used for panel thickness 0.8 to 2 mm
- Please contact Essentra Components for special colours

MATERIAL

HOUSING:	PA6 GFR 30
DRIVER:	Zamak DIN-EN 1774-ZnAl4Cu1 or PA6 GFR 30
CAM:	Steel or plastic

MATERIAL	M	FINISH	F
Zamak	1	Chrome plated	1
		Black coated	2
Plastic	2	No finish	0

Group Code	Version	Housing		Driver		Driver No	Cam
660	V	2	0	M	F	DD	CC

For cams please check pages: 170 - 171
For drivers please check page: 194
For keys please check pages: 189 - 191

QUARTER TURN – EASY FIXING

661



RoHS

IP 66

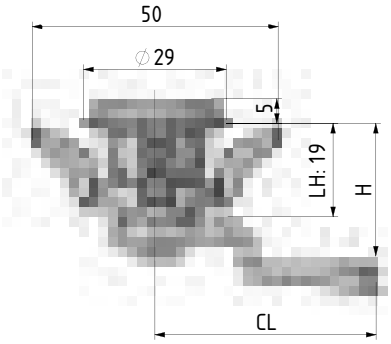

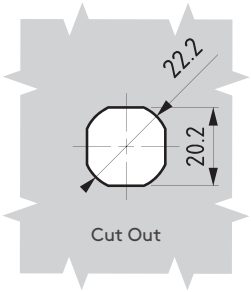



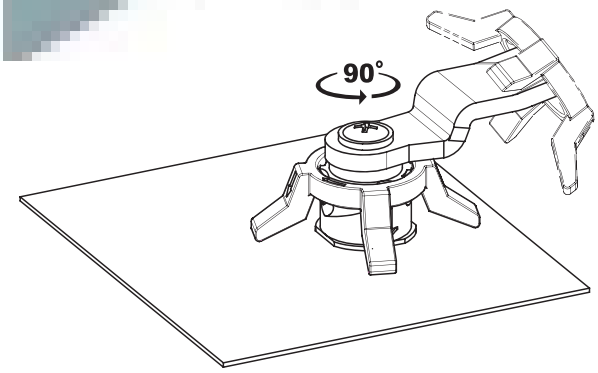

- Easy assembly - without tools
- Standard cut out
- 2.0 mm maximum panel thickness

MATERIAL

HOUSING:	Polyamide DIN-EN ISO 1043-1 PA6 GFR 30
DRIVER:	PA6 GFR 30
CAM:	Steel

DRIVERS

5 mm Double bit	
DD	
15	

8 mm Square	
DD	
28	

9 mm Triangular	
DD	
39	

Note: For different drivers please contact Essentra

MATERIAL	M	FINISH	F
Plastic	2	No finish	0

Group Code	Housing		Driver		Driver No	Cam
661	2	0	2	0	DD	CC

For cams please check pages: 170 - 171

For keys please check pages: 189 - 191

tel | +90 212 721 44 44 fax | +90 212 721 44 45

561 KNOB LOCK (Plastic)

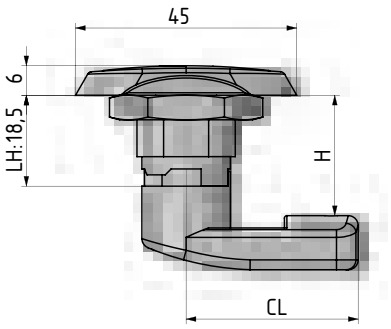

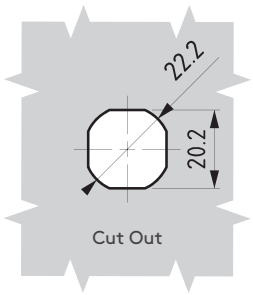

RoHS

IP 65



- Designed to act as a knob.
- For special colours, please contact Essentra

MATERIAL

HOUSING:	Polyamide DIN-EN ISO 1043-1 PA6 GFR 30
DRIVER:	Zamak or PA6 GFR 30
NUT:	Zamak or PA6 GFR 30
CAM:	Steel or plastic



MATERIAL	M	FINISH	F
Zamak	1	Chrome plated	1
		Black coated	2
Plastic	2	No finish	0

Group Code	Housing		Driver		Driver No	Cam
561	2	0	M	F	DD	CC

For cams please check pages: 170 - 171
For drivers please check page: 194
For keys please check pages: 189 - 191

QUARTER TURN – EASY FIXING

761

V:1

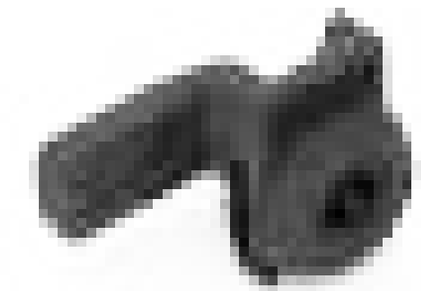

NEW

RoHS

IP 66

L R

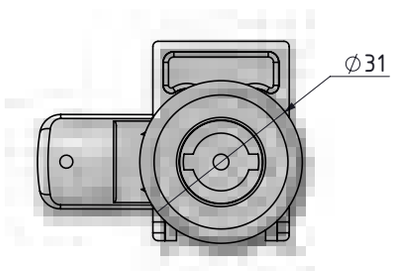

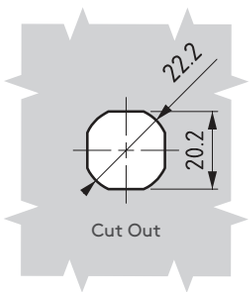

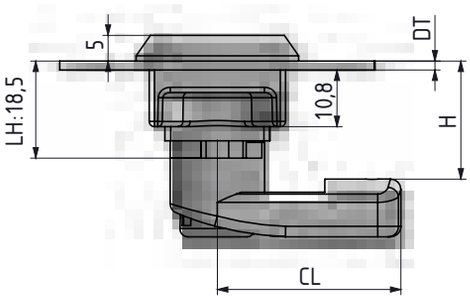

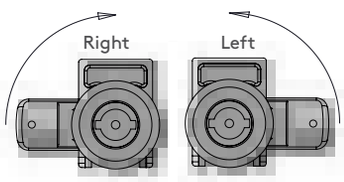

- Easy assembly by plastic clips
- Applicable on different panel thicknesses
- Various driver options are possible
- Standard cut out

MATERIAL

HOUSING:	Polyamide DIN-EN ISO 1043-1 PA6 GFR 30
DRIVER:	Plastic or zamak
CAM:	Plastic or steel

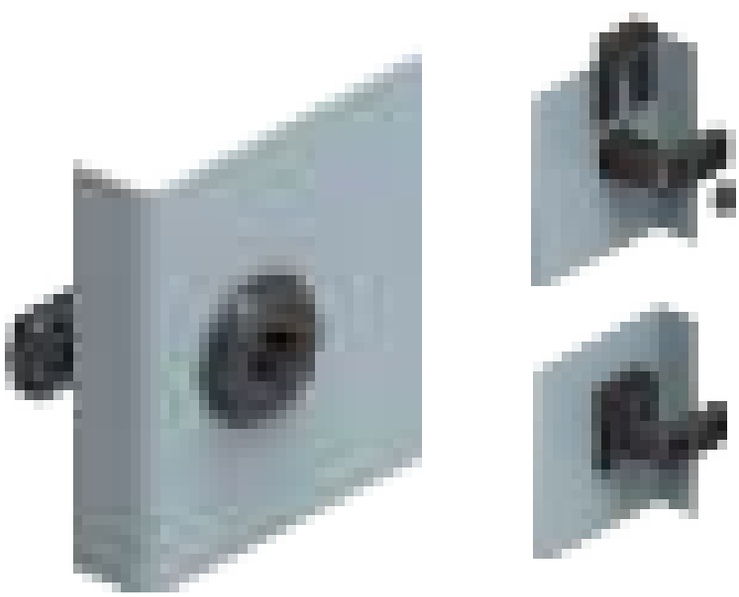



320.02.221
BOLT COVER (For grounding)

- Can order separately (only for plastic cams)

Note: For different colors please contact Essentra

DOOR THICKNESS	DT
1.2 -1.8 mm panel	12
1.8 -2.3 mm pane	23

DOOR DIRECTION	
Right hand	001
Left hand	002

MATERIAL	M	FINISH	F
Zamak	1	Chrome plated	1
		Black coated	2
Plastic	2	No finish	0

Group Code	Version	Driver		Driver No	Door Thickness	Cam	Door Direction
761	1	M	F	DD	DT	CC	

For cams please check pages: 170 - 171
For drivers please check page: 194
For keys please check pages: 189 - 191

tel | + 90 212 721 44 44 fax | + 90 212 721 44 45

761

QUARTER TURN – EASY FIXING

V: 2

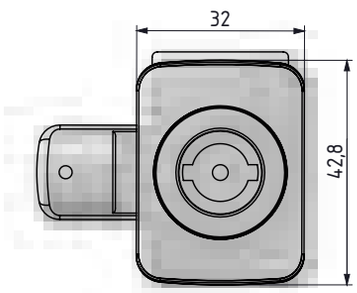

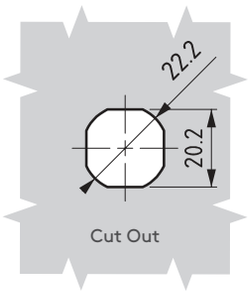

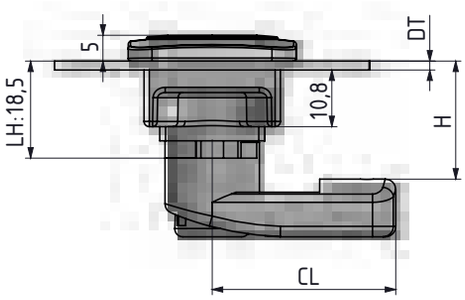

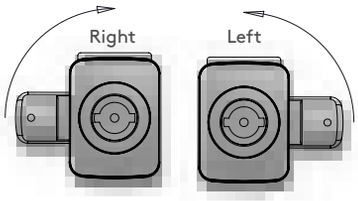

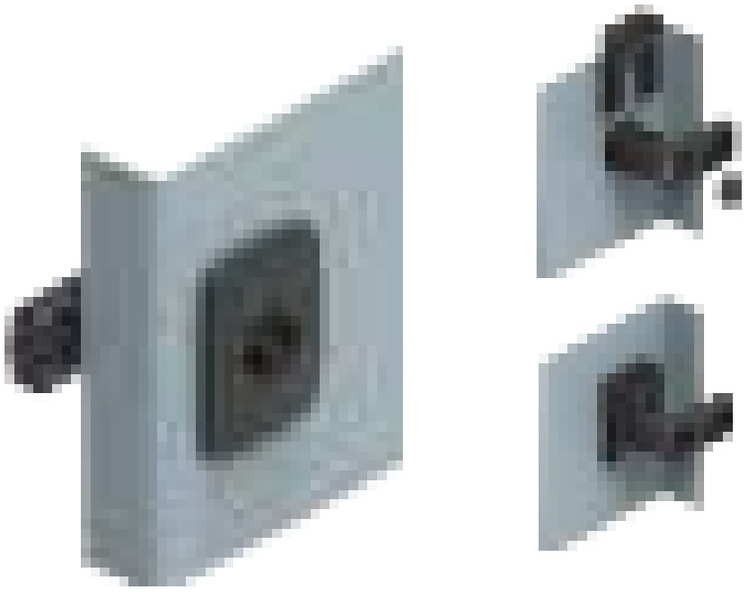

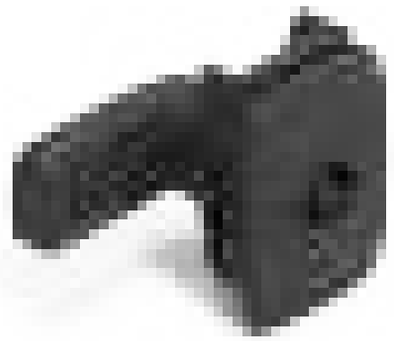

- Easy assembly by plastic clips
- Applicable on different panel thicknesses
- Various driver options are possible
- Logo application upon request
- Standard cut out

MATERIAL

HOUSING:	Polyamide DIN-EN ISO 1043-1 PA6 GFR 30
DRIVER:	Plastic or zamak
CAM:	Plastic or steel



320.02.221
BOLT COVER (For grounding)

- Can order separately (only for plastic cams)

DOOR THICKNESS	DT
1.2 -1.8 mm panel	12
1.8 -2.3 mm pane	23

DOOR DIRECTION	
Right hand	001
Left hand	002

MATERIAL	M	FINISH	F
Zamak	1	Chrome plated	1
		Black coated	2
Plastic	2	No finish	0

Group Code	Version	Driver		Driver No	Door Thickness	Cam	Door Direction
761	2	M	F	DD	DT	CC	

Note: For different colors please contact Essentra

For cams please check pages: 170 - 171
For drivers please check page: 194
For keys please check pages: 189 - 191

QUARTER TURN - SPRING LOADED — 760



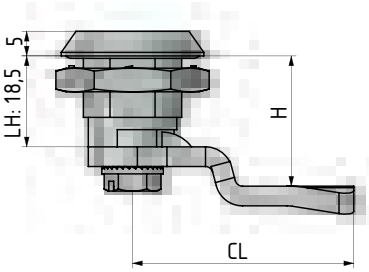

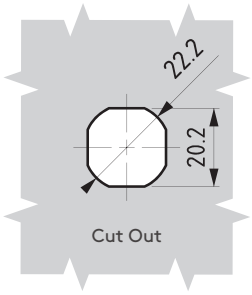

- Specially designed internal spring provides 1.5mm of compression.
- Cam does not rotate beyond quarter turn due to stop lip.

MATERIAL

HOUSING:	PA6 GFR 30
DRIVER:	Zamak DIN-EN 1774-ZnAl4Cu1 or PA6 GFR 30
CAM:	Steel or plastic
GASKET:	Polyurethane

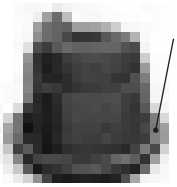

Sealing in plastic housing.
This application aims to improve the sealing level in quarter turns.



MATERIAL	M	FINISH	F
Zamak	1	Chrome plated	1
		Black coated	2
Plastic	2	No finish	0

Group Code	Housing		Driver		Driver No	Cam
760	2	0	M	F	DD	CC

For cams please check pages: 170 - 171
For drivers please check page: 194
For keys please check pages: 189 - 191

tel | +90 212 721 44 44 fax | +90 212 721 44 45

360 QUARTER TURN – SPRING LOADED

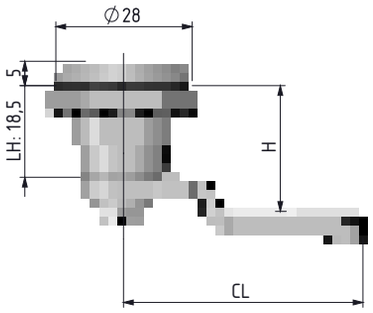

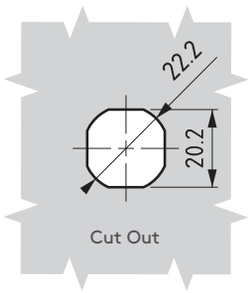

RoHS

IP 65

L R



- Special clip for grounding
- Specially designed internal spring provides 1.5 mm of compression
- Cam does not rotate beyond quarter turn due to stop lip

Grounding clip

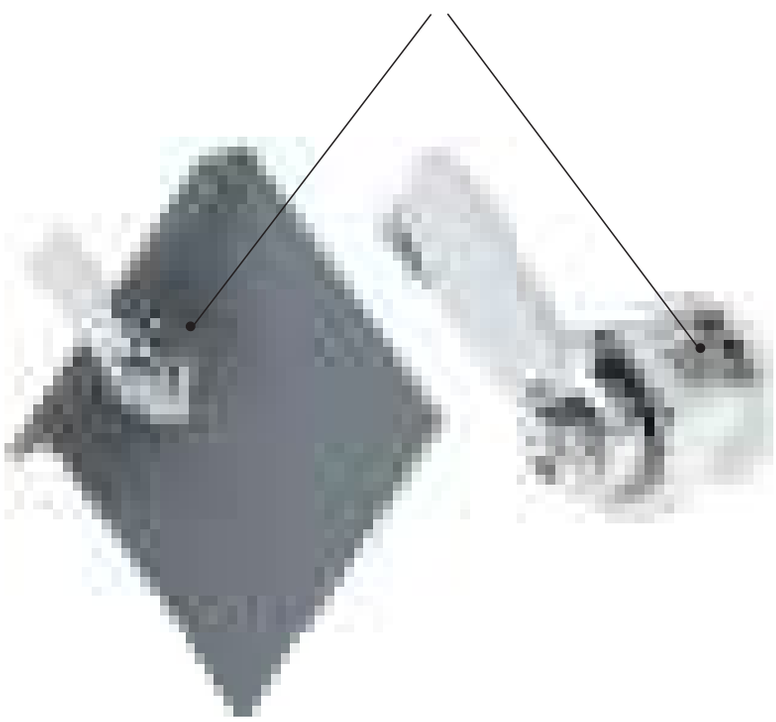

MATERIAL

HOUSING:	Zamak DIN-EN 1774-ZnAl4Cu1
DRIVER:	Zamak DIN-EN 1774-ZnAl4Cu1
CAM:	Steel or plastic
GASKET:	Rubber

GROUNDING CLIP: Stainless steel

FINISH

Chrome or Black coated

MATERIAL	M	FINISH	F
Zamak	1	Chrome plated	1
		Black coated	2

Group Code	Material	Finish	Driver No	Cam
360	M	F	DD	CC

For cams please check pages: 170 - 171

For drivers please check page: 194

For keys please check pages: 189 - 191

KNOB LOCK (Plastic) 161



RoHS

IP 65

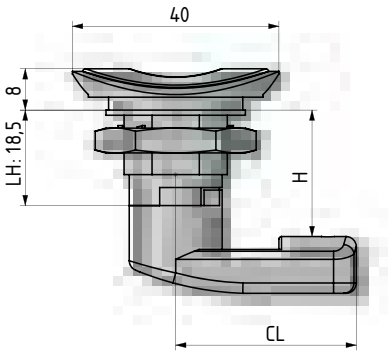

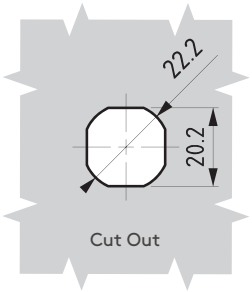

- Designed to act as a knob
- For special colours, please contact Essentra

MATERIAL

HOUSING:	Polyamide DIN-EN ISO 1043-1 PA6 GFR 30
DRIVER:	Zamak or PA6 GFR 30
NUT:	Zamak or PA6 GFR 30
CAM:	Steel or Plastic



MATERIAL	M	FINISH	F
Zamak	1	Chrome plated	1
		Black coated	2
Plastic	2	No finish	0

Group Code	Housing		Driver		Driver No	Cam
161	2	0	M	F	DD	CC

For cams please check pages: 170 - 171
For drivers please check page: 194
For keys please check pages: 189 - 191

tel | +90 212 721 44 44 fax | +90 212 721 44 45

261 KNOB LOCK (Plastic)

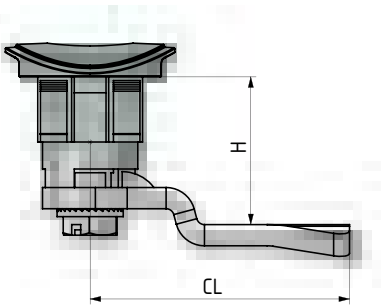

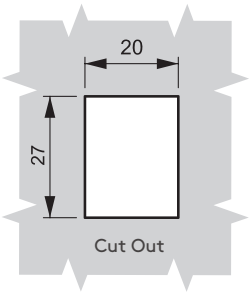

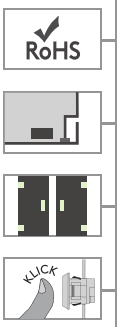



- Clip fixing for easy assembly
- Mounting nut not required
- Special 20 mm x 26 mm cut out
- There is no IP 65 version of this lock
- 1.8 mm maximum panel thickness

MATERIAL

HOUSING: Polyamide DIN-EN ISO 1043-1 PA6 GFR 30
DRIVER: Zamak or PA6 GFR 30
CAM: Steel or plastic

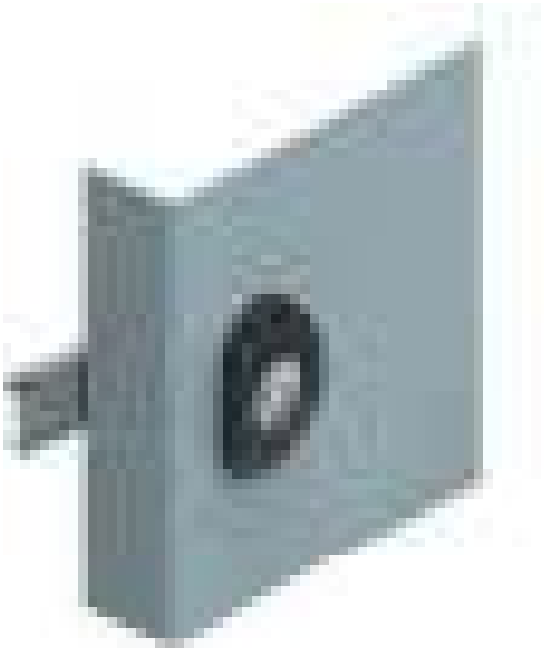

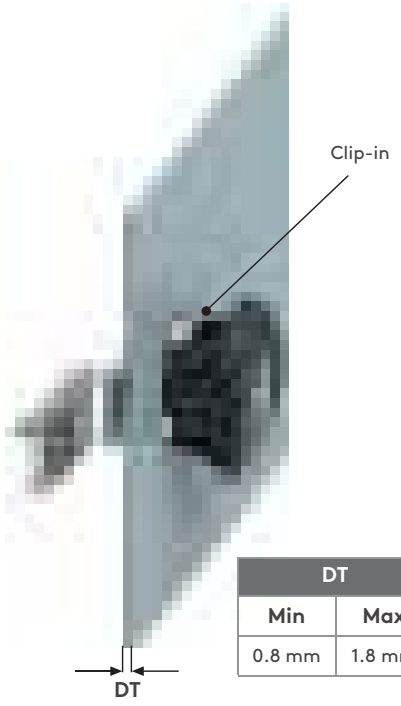

Door Thickness

DT	
Min	Max
0.8 mm	1.8 mm

MATERIAL	M	FINISH	F
Zamak	1	Chrome plated	1
		Black coated	2
Plastic	2	No finish	0

Group Code	Housing		Driver		Driver No	Cam
261	2	0	M	F	DD	CC

For cams please check pages: 170 - 171
For drivers please check page: 194
For keys please check pages: 189 - 191

QUARTER TURN – SPRING CAM

160



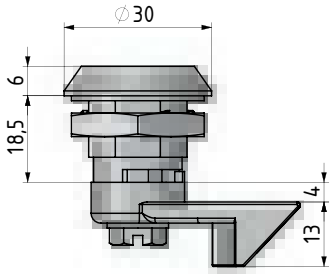

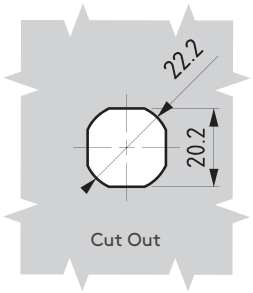

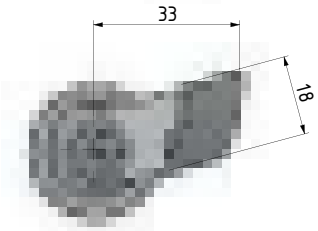

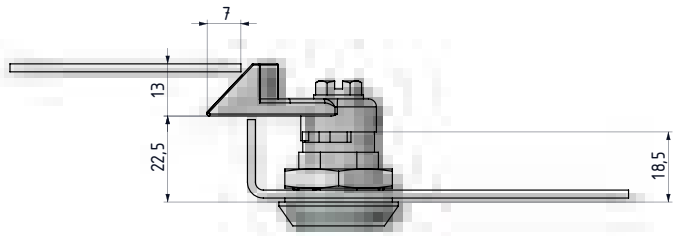

- **Stainless steel version: page: 458**
- Spring-loaded cam provides depress-to-lock action
- Distance between inside of lock face and front of cam fixed at 22.5 mm
- There is no IP 65 version of this lock,due to spring loaded cam

MATERIAL

HOUSING:	Zamak DIN-EN 1774-ZnAl4Cu1
DRIVER:	Zamak DIN-EN 1774-ZnAl4Cu11
GASKET:	Rubber

FINISH
Chrome plated



Position 1
Push the door

Position 2
Cam will move upright when touches the body

Position 3
When the cam is free, cam will move down right by spring and the door will lock

MATERIAL	M	FINISH	F
Zamak	1	Chrome plated	1
		Black coated	2

DOOR DIRECTION	
Right hand	001
Left hand	002

Group Code	Material	Finish	Driver No	Door Direction
160	1	F	DD	

For drivers please check page: 194
For keys please check pages: 189 - 191

tel | +90 212 721 44 44 fax | +90 212 721 44 45

260

QUARTER TURN – PADLOCKABLE

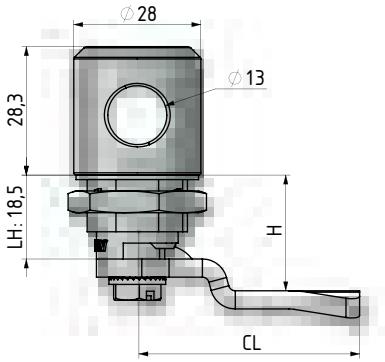

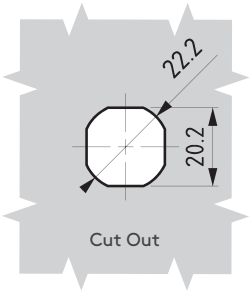



- **Stainless steel version: page: 459**
- Padlockable version
- Can be used with different drivers

MATERIAL

HOUSING:	Zamak DIN-EN 1774-ZnAl4Cu1
DRIVER:	Zamak DIN-EN 1774-ZnAl4Cu1
CAM :	Steel
GASKET:	Rubber

Application 1



Application 2

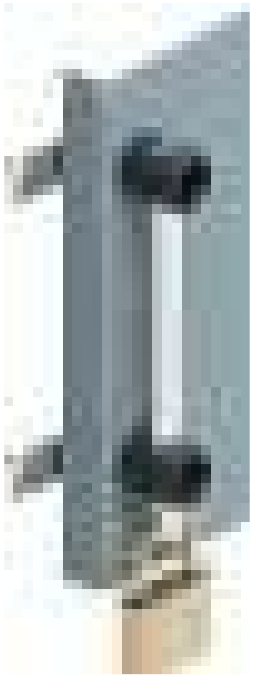

MATERIAL	M	FINISH	F
Zamak	1	Chrome plated	1
		Black coated	2

Group Code	Housing		Driver		Driver No	Cam
260	1	F	1	F	DD	CC

For cams please check pages: 170 - 171
For drivers please check page: 194
For keys please check pages: 189 - 191

PACO LOCK

162



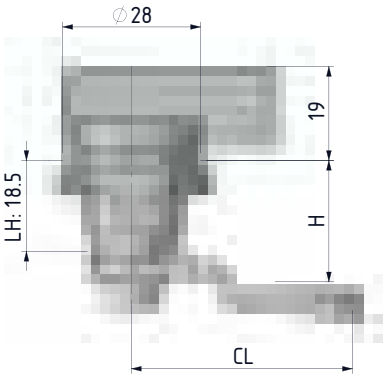

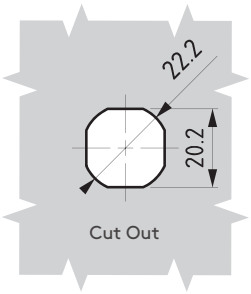

- Paco type knobw

MATERIAL

HOUSING:	Zamak DIN-EN 1774-ZnAl4Cu1
KNOB:	PA6 GFR 30
CAM:	Steel or plastic
GASKET:	Rubber

FINISH
Chrome plated



Group Code	Cam
162	CC

For cams please check pages: 170 - 171
For rods please check pages: 178 - 188

tel | +90 212 721 44 44 fax | +90 212 721 44 45

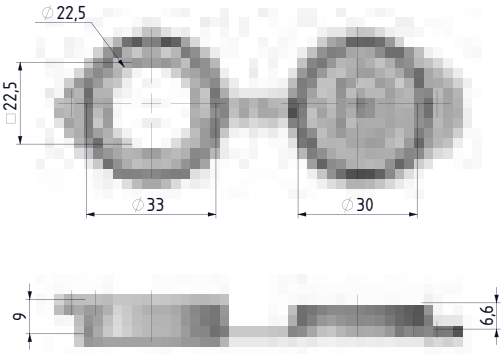



060 A7 DUST CAP



- Recommended when dust and humidity protection required
- Can be ordered separately

MATERIAL
Polyurethane

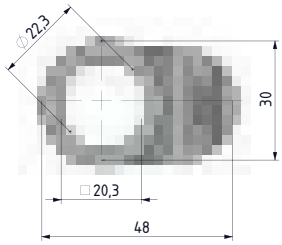

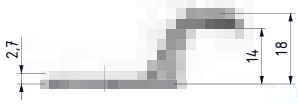



060 A2 LOCK HANDLE

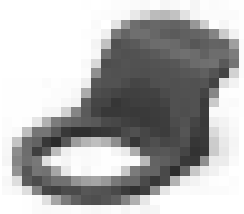

- Reduces the LH and H dimensions by 1 mm. Choose CH -1 mm for cam selection compared to unused

MATERIAL
PA6 GFR 30

FIXING DEVICE 060 A3

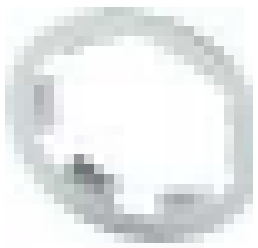



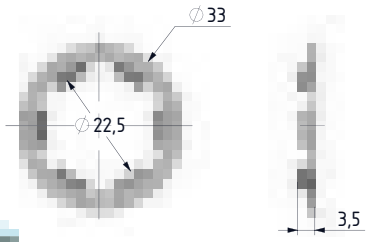

- Prevents rotation
- For applications subject to vibration

MATERIAL
Steel

FINISH
Zinc plated

PADLOCK ADAPTER 060 A8



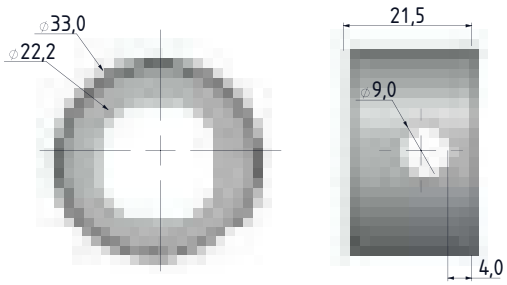

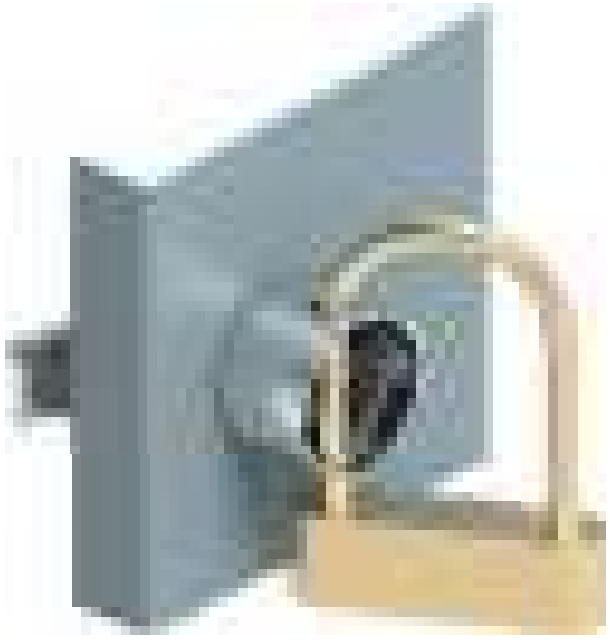

- Max. shackle diameters is 8 mm
- Reduces the LH and H dimensions by 2 mm. Choose CH -2 mm for cam selection compared to unused

MATERIAL
Steel

FINISH
Zinc plated

tel | +90 212 721 44 44 fax | +90 212 721 44 45

060 A5 FIXING DEVICE

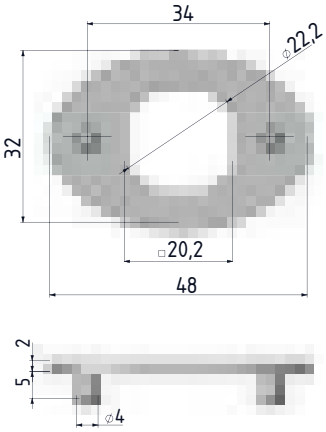



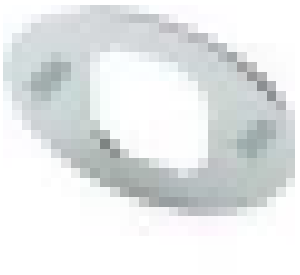

- Fixing device for wooden applications

MATERIAL
Zamak DIN-EN 1774-ZnAl4Cu1

FINISH
Zinc plated

060 A6 SPACER

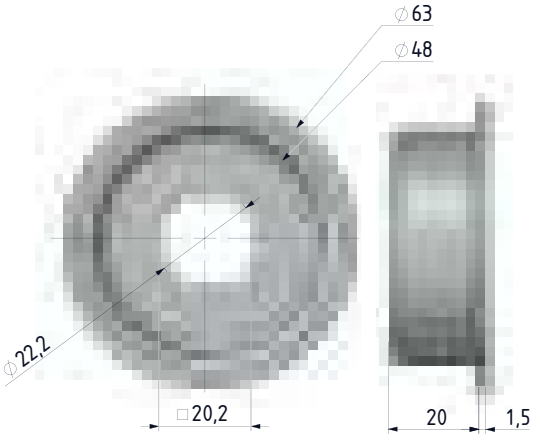



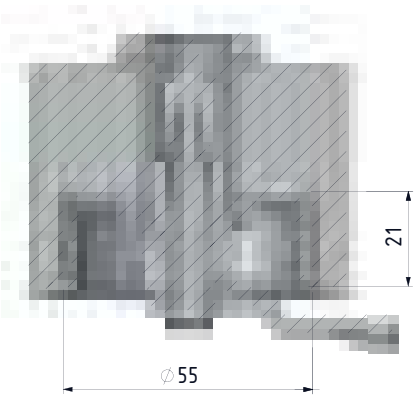



- Allows lock to be fitted to thick doors
- Easy fixing for isolated doors

MATERIAL
Steel

FINISH
Zinc plated

STEPPED COVER LOCK 064



- For soundproof or isolated doors
- Tight closure achievable with 270° cam rotation and stepped cam
- Lock supplied with standard housing

MATERIAL

HOUSING:	Zamak DIN-EN 1774-ZnAl4Cu1
DRIVER:	Zamak DIN-EN 1774-ZnAl4Cu1
CAM:	Zamak DIN-EN 1774-ZnAl4Cu1
GASKET:	Rubber

FINISH
Chrome or Black coated

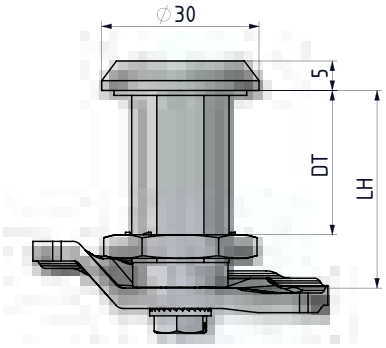

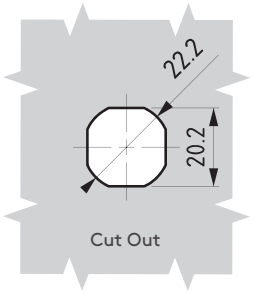

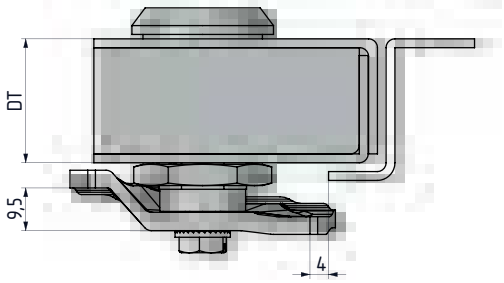

LH	DT
30	20
40	30
50	40
60	50

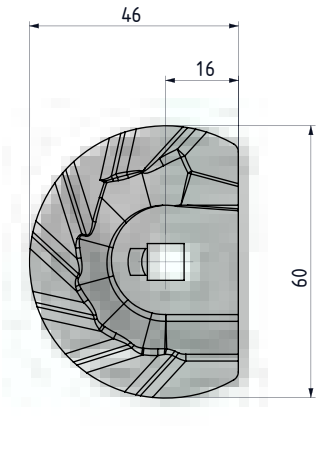

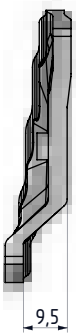

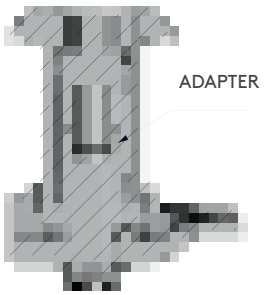

MATERIAL	M	FINISH	F
Zamak	1	Chrome plated	1
		Black coated	2

Group Code	Material	Finish	Driver No	Door Thickness	Cam
064	1	F	DD	DT	99

For drivers please check pages: 194
For keys please check pages: 189 - 191

tel | +90 212 721 44 44 fax | +90 212 721 44 45

064 QUARTER TURN – SPRING LOADED

RoHS

IP 65

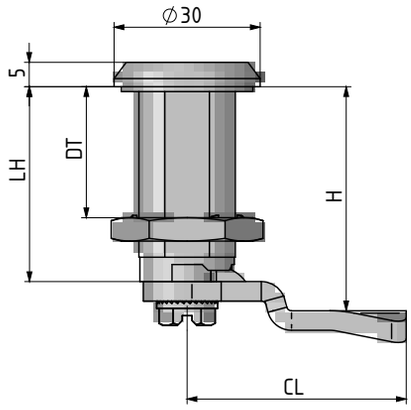

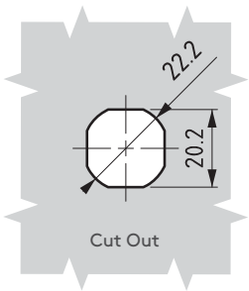

LH	DT
30	20
40	30
50	40
60	50

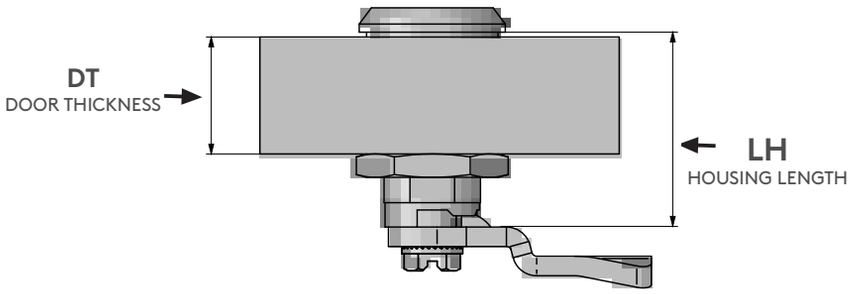



- **Stainless steel version: page: 457**
- For soundproof or isolated doors
- Supplied with standard housing

MATERIAL

HOUSING:	Zamak DIN-EN 1774-ZnAl4Cu1
DRIVER:	Zamak DIN-EN 1774-ZnAl4Cu1
CAM:	Steel
GASKET:	Rubber

FINISH
Chrome plated or black coated

MATERIAL	M	FINISH	F
Zamak	1	Chrome plated	1
		Black coated	2

Group Code	Material	Finish	Driver No	Door Thickness	Cam
064	1	F	DD	DT	CC

For cams please check pages: 170 - 171
For drivers please check page: 194
For keys please check pages: 189 - 191

QUARTER TURN – WING KNOB 064

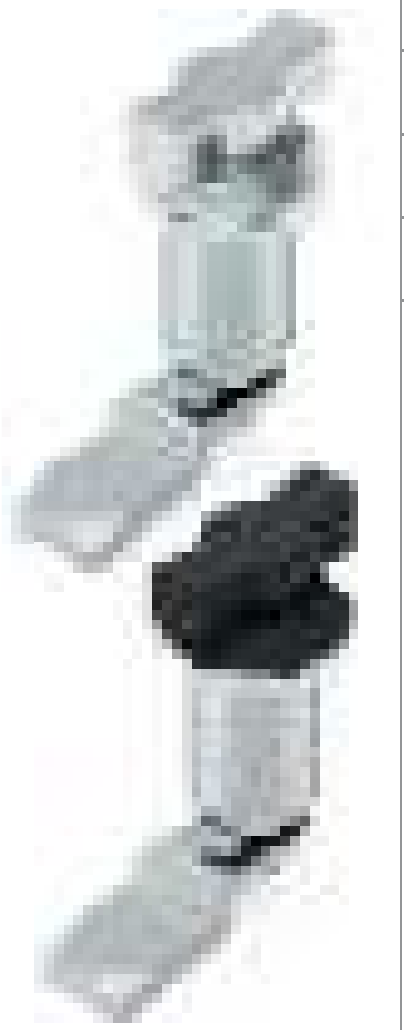

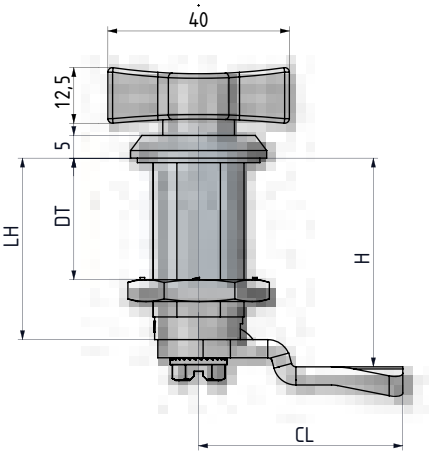

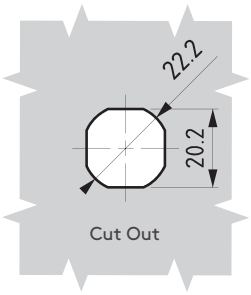

LH	DT
30	20
40	30
50	40
60	50

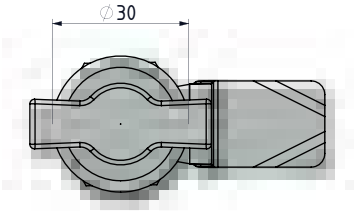



- For soundproof or isolated doors
- Supplied with standard housing

MATERIAL

HOUSING:	Zamak DIN-EN 1774-ZnAl4Cu1
DRIVER:	Zamak DIN-EN 1774-ZnAl4Cu1
CAM:	Steel
GASKET:	Rubber

FINISH
Chrome or Black coated

MATERIAL	M	FINISH	F
Zamak	1	Chrome plated	1
		Black coated	2

Group Code	Knob	Door Thickness	Material	Finish	Cam
064	062	DT	1	F	CC

For cams please check pages: 170 - 171
For rods please check pages: 178 - 188

tel | +90 212 721 44 44 fax | +90 212 721 44 45

064 QUARTER TURN – WING KNOB

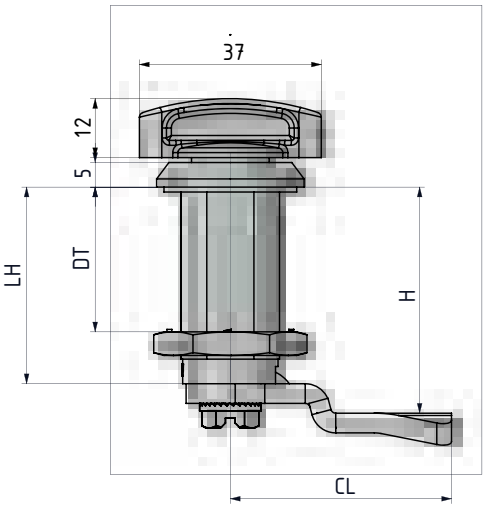

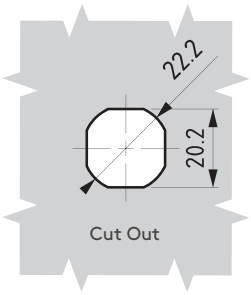

LH	DT
30	20
40	30
50	40
60	50

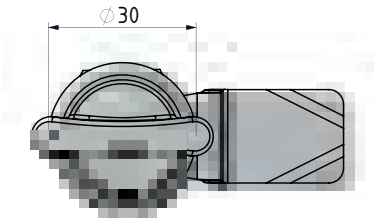



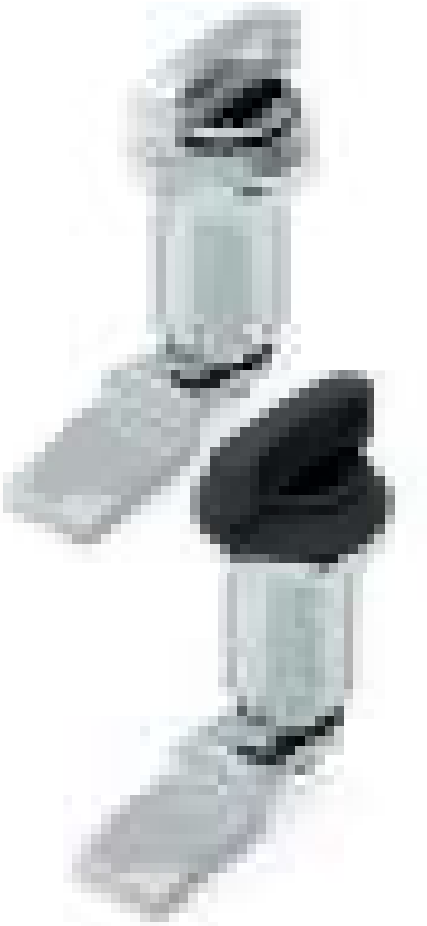

- For sound-proof or isolated doors
- Supplied with standard housing

MATERIAL

HOUSING:	Zamak DIN-EN 1774-ZnAl4Cu1
DRIVER:	Zamak DIN-EN 1774-ZnAl4Cu1
CAM:	Steel
GASKET:	Rubber

FINISH
Chrome plated or black coated

MATERIAL	M	FINISH	F
Zamak	1	Chrome plated	1
		Black coated	2

Group Code	Knob	Door Thickness	Material	Finish	Cam
064	362	DT	1	F	CC

For cams please check pages: 170 - 171
For rods please check pages: 178 - 188

QUARTER-TURN LOCKS

COMPRESSION LOCK

040



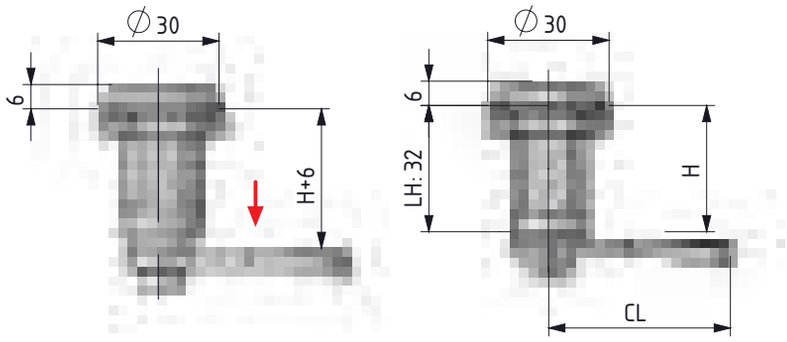

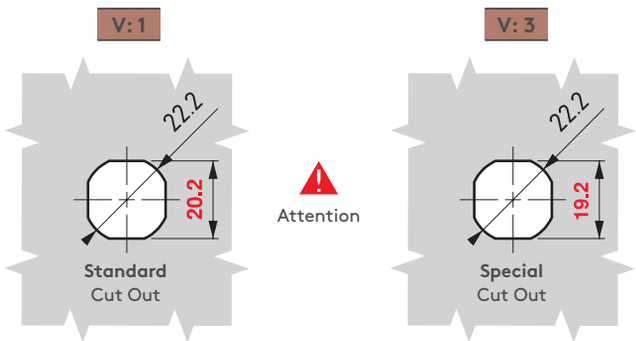

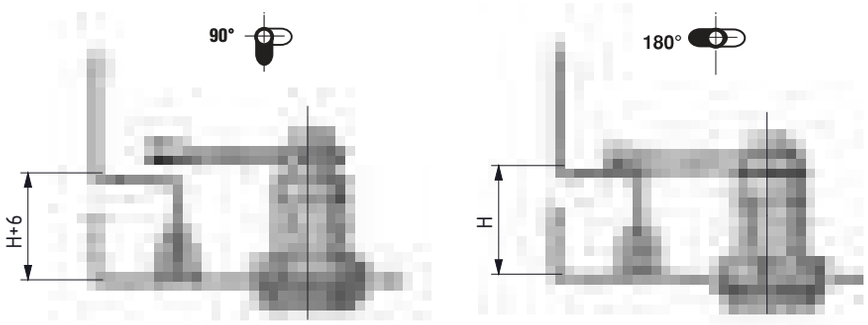

The first 90° of key rotation turns the cam to locking position

Further key rotation 180° applies 6 mm compression

- **Stainless Steel version: page 462**
- Used for cabinets that require better sealing under vibrating conditions
- Provides 6 mm of compression
- Provides noise isolation
- Alternative drivers / cams available
- Standard cams without stopper required for these locks
- The lock has been tested according to the DIN EN 61373 Category 1-B for vibration and shock.
- Working Temprature Range: -50/+80 C
  M22 Nut :
  should be fixed with 20 Nm
  M10 Nut:
  should be fixed with 10 Nm
- Threadlocker is applied to the nut threads to get extra fastness against vibration and shock
- Max load capacity: 562 N

MATERIAL

HOUSING:	Zamak DIN-EN 1774-ZnAl4Cu1
DRIVER:	Zamak DIN-EN 1774-ZnAl4Cu1
CAM:	Steel
GASKET:	Rubber

FINISH
Chrome plated or black coated

For cams please check pages:: 172 - 173

For keys please check pages: 189 - 191

KNOB	
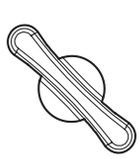	
DD	94

DRIVERS									
3 mm Double bit		5 mm Double bit		Tubular key		8 mm Hexagon		8 mm Hexagon with security pin	
DD	13	DD	15	DD	93	DD	68	DD	69
Railway		8 mm Square		2X4 mm Slot		7 mm Triangular		8 mm Triangular	
DD	88	DD	28	DD	42	DD	37	DD	38

MATERIAL	M	FINISH	F
Zamak	1	Chrome plated	1
		Black coated	2

DOOR DIRECTION	
Right hand	001
Left hand	002

Group Code	Version	Material	Finish	Driver	Cam	Door Direction
040	V	1	F	DD	CC	

tel | + 90 212 721 44 44 fax | + 90 212 721 44 45

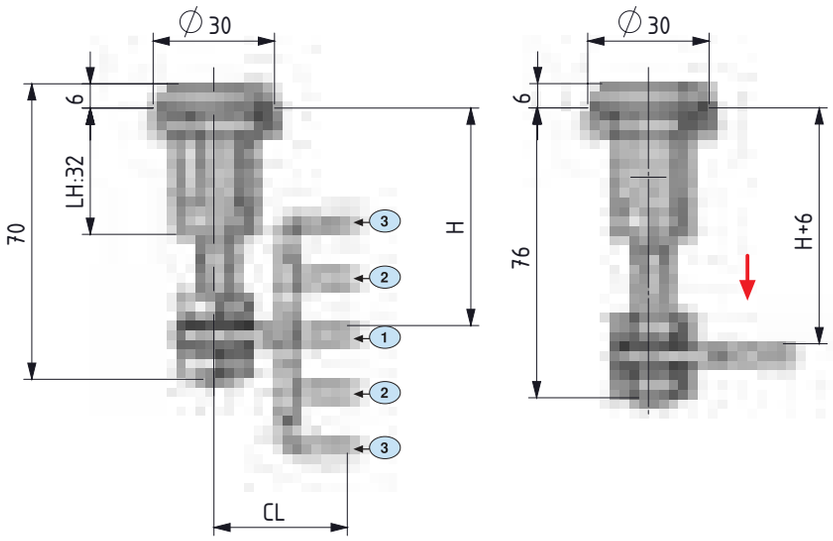

040

COMPRESSION LOCK

RoHS

IP 65

L

R



V: 2

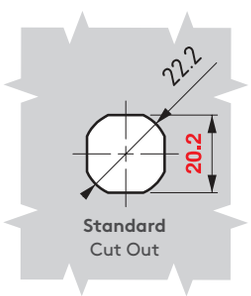

Standard
Cut Out

Attention

V: 4

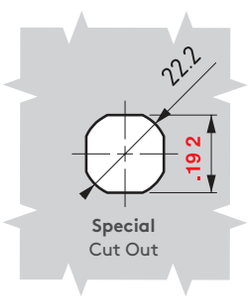

Special
Cut Out



- Used for cabinets that require better sealing under vibrating conditions
- Provides 6 mm of compression
- Wide grip range with adjustable screw
- Provides noise isolation.
- Different drivers / cams available
- Three cam alternatives available
- The lock has been tested according to the DIN EN 61373 Category 1-B for vibration and shock.
- Working Temprature Range: -50/+80 C
  M22 Nut :
  should be fixed with 20 Nm
  M10 Nut:
  should be fixed with 10 Nm
- Threadlocker is applied to the nut threads to get extra fastness against vibration and shock
- Max load capacity: 562 N

CAM	STOCK CODE	CC	CH	CL	POSITION	H GRİP MIN	H GRİP MAX
1	30403565Y	01	0	33	Düz	41	58
2	30403566Y	02	14	33	Yukarı	27	44
					Aşağı	55	72
3	30403567Y	03	27,5	33	Yukarı	13,5	30,5
					Aşağı	68	85

MATERIAL

HOUSING:	Zamak DIN-EN 1774-ZnAl4Cu1
DRIVER:	Zamak DIN-EN 1774-ZnAl4Cu1
CAM:	Steel
GASKET:	Rubber

MATERIAL	M	FINISH	F
Zamak	1	Chrome plated	1
		Black coated	2

DOOR DIRECTION	
Right hand	001
Left hand	002

Group Code	Version	Material	Finish	Driver	Cam	Door Direction
040	V	1	F	DD	CC	

FIXING DEVICE



- Can be ordered separately
  ORDER CODE: 32005018Y

MINI COMPRESSION LOCK — 140

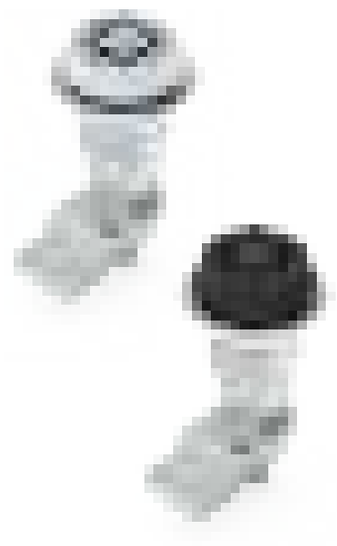

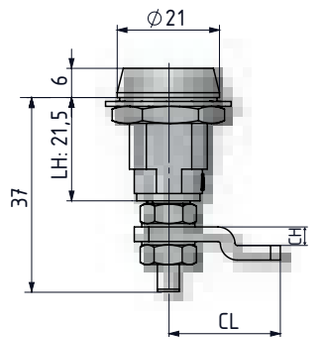

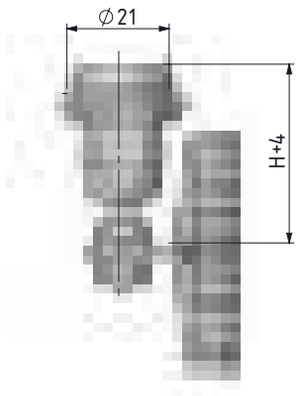

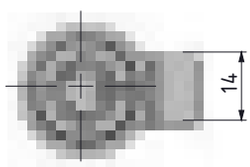

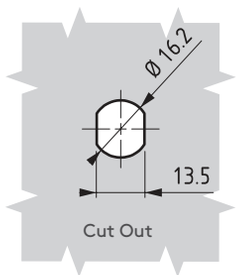

- **Stainless steel version: page 460**
- Used for cabinets that require better sealing under vibrating conditions
- 4 mm compression ratio
- Provides noise isolation
- Driver and cam alternatives available

MATERIAL
HOUSING : Zamak DIN-EN 1774-ZnAl4Cu1
DRIVER: Zamak DIN-EN 1774-ZnAl4Cu1
CAM: Steel

FINISH
Chrome plated or black coated

CAM	STOCK CODE	CC	CH	CL	H GRİP MIN	H GRİP MAX
1	30403606Y	01	0	23	26.2	29.4
2	30403607Y	02	1	23	25.2	28.4
3	30403608Y	03	3.8	23	22.4	25.6
4	30403609Y	04	7	23	19.2	22.4
5	30403610Y	05	10.2	23	16	19.2
6	30403611Y	06	13.4	23	12.8	16
7	30403612Y	07	16.6	23	9.6	12.8
8	30403613Y	08	19.8	23	6.4	9.6
9	30403614Y	09	23	23	3.2	6.4

KNOB

DD 94

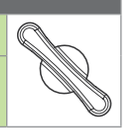

DRIVERS

Tubular key — DD 93



4 mm Hexagon — DD 64



Slot — DD 45



DUST CAP — 140 A1

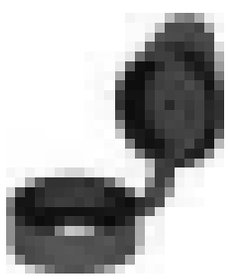

(Order separately)

MATERIALPolyurethane

MATERIAL	M	FINISH	F
Zamak	1	Chrome plated	1
		Black coated	2

Group Code	Material	Finish	Driver	Cam
140	1	F	DD	CC

tel | + 90 212 721 44 44 fax | + 90 212 721 44 45

045 COMPRESSION - SPRING LATCH

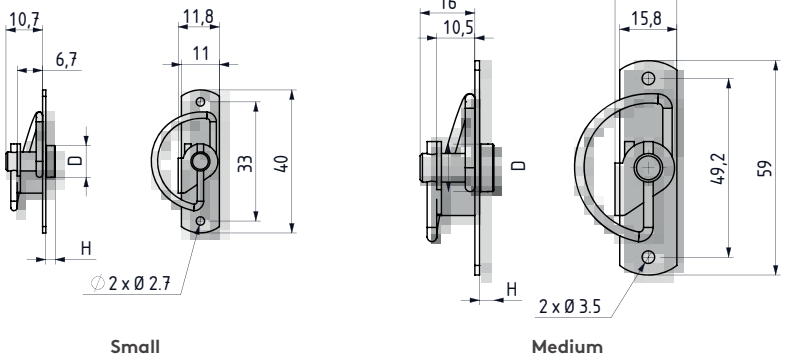

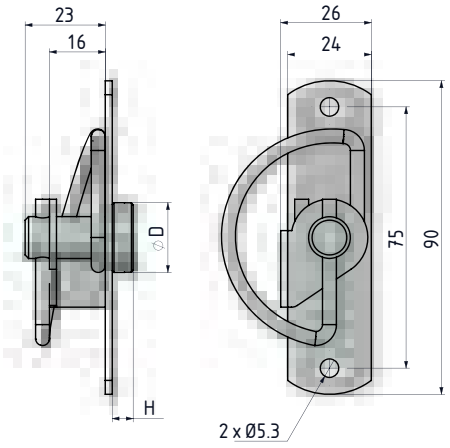

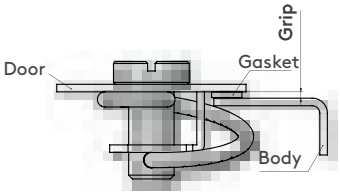



- **Stainless Steel version: page 469**
- Fix small panels to frame with ease
- Quarter-turn locking
- Easy assembly
- For doors with a bend of 24 mm

MATERIAL

BODY:	Steel
DRIVER:	Steel
SPRING:	Stainless steel

	DRIVERS			
V	DD	Driver name	DØ	H
1	12	Slot - Small	10	3
	13	Knurled - Small	10.5	12
2	21	Hexagon Female 4 mm	12	3.5
	22	Slot - Medium	12	3.5
	23	Knurled - Small	13	17.5
3	31	Hexagon Female 8 mm	20	6
	32	Slot - Large	20	5


Hexagon Female


Slot


Knurled

CAMS		
CC	Cam name	VERSION
41	Smooth Spring - Small	1
42	Smooth Spring - Medium	2
52	Serrated Spring - Medium	2
43	Smooth Spring - Large	3
53	Serrated Spring - Large	3

VERSIONS	
V	Product
1	Small Spring Latch
2	Medium Spring Latch
3	Large Spring Latch

MATERIAL	M	FINISH	F
Steel	6	Zinc Plated	3

Group Code	Version	Material	Finish	Driver	Cam
045	V	6	3	DD	CC

MINI QUARTER TURN – EASY FIXING

366



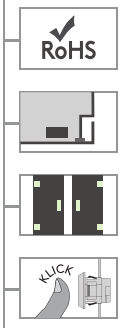

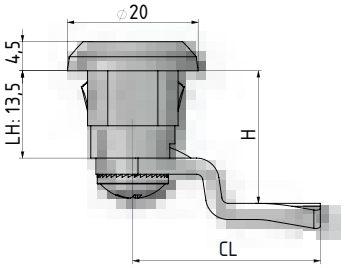

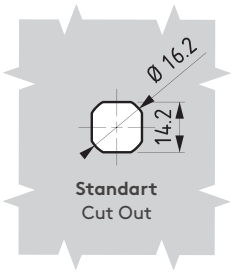

Standart
Cut Out

V: 1

- Easy assembly by clips
- Specially designed internal spring provides 1 mm torsion

MATERIAL

HOUSING:	PA6 GFR 30
DRIVER:	Zamak DIN-EN 1774-ZnAl4Cu1 or PA6 GFR 30
CAM:	Steel

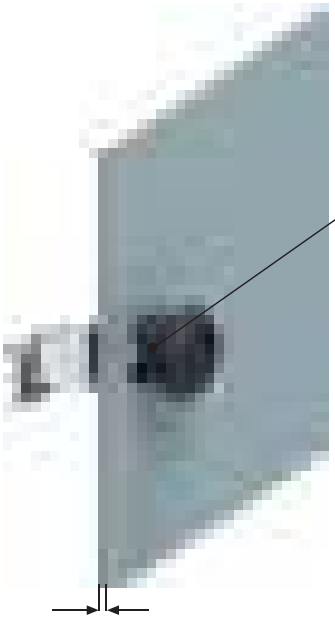

DT
Door Thickness:
0.8 mm - 1.2 mm

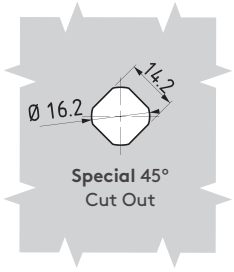

Special 45°
Cut Out

V: 2



Application Keys
Code: 267

DRIVERS			
6 mm Square		M	F
DD		1	1
		1	2
26		2	0
7 mm Triangular		M	F
DD		1	1
		1	2
37		2	0
Slot		M	F
DD		1	1
		1	2
42		2	0

MATERIAL	M	FINISH	F
Zamak	1	Chrome plated	1
		Black coated	2
Plastic	2	No finish	0

Group Code	Version	Housing		Driver		Driver No	Cam
366	V	2	0	M	F	DD	CC

For cams please check pages: 175 (Cam-3)

tel | +90 212 721 44 44 fax | +90 212 721 44 45

566 MINI QUARTER TURN – EASY FIXING

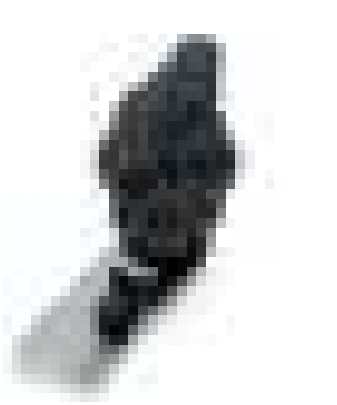

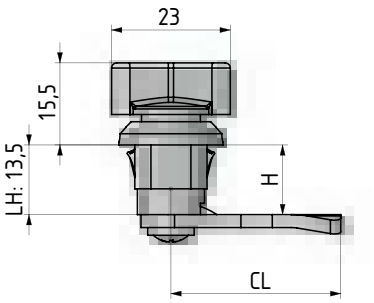

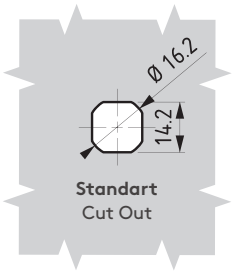

Standart
Cut Out

V: 1

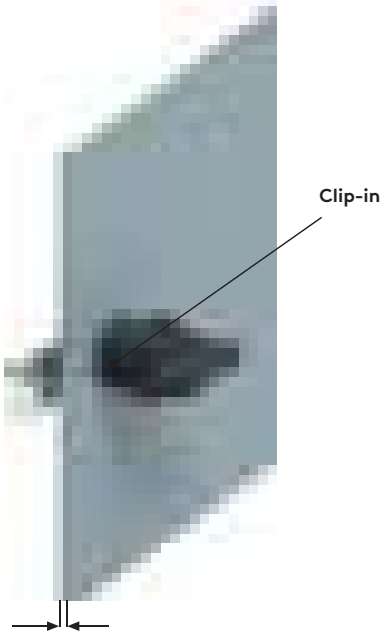

DT
Door Thickness:
0.8 mm - 1.2 mm

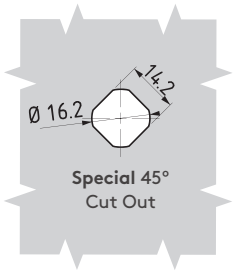

Special 45°
Cut Out

V: 2

- Easy assembly by clips
- Specially designed internal spring provides 1 mm torsion

MATERIAL

HOUSING:	PA6 GFR 30
KNOB:	Zamak DIN-EN 1774-ZnAl4Cu1 or PA6 GFR 30
CAM:	Steel

MATERIAL	M	FINISH	F
Zamak	1	Chrome plated	1
		Black coated	2
Plastic	2	No finish	0

Group Code	Version	Housing		Knob		Cam
566	V	2	0	M	F	CC

For cams please check pages: 175 (Cam-3)

MINI QUARTER TURN – SPRING LOADED

066

RoHS

IP 65



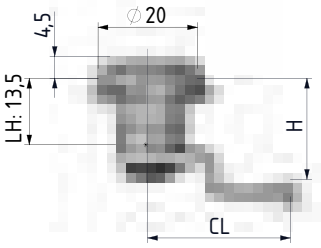

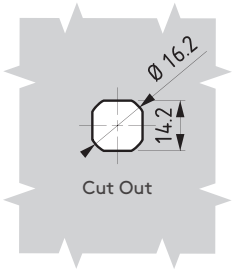



- **Stainless steel version: page 456**
- Specially designed internal spring provides 1 mm torsion
- Sealing washer not supplied

MATERIAL

HOUSING:	Zamak DIN-EN 1774-ZnAl4Cu1 or PA6 GFR 30
DRIVER:	Zamak DIN-EN 1774-ZnAl4Cu1 or PA6 GFR 30
CAM:	Steel

DRIVERS		M	F
6 mm Square			
DD		1	1
		1	2
26		2	0
7 mm Triangular		M	F
DD		1	1
		1	2
37		2	0
Slot		M	F
DD		1	1
		1	2
42		2	0



Application Keys
Code: 267

MATERIAL	M	FINISH	F
Zamak	1	Chrome plated	1
		Black coated	2
Plastic	2	No finish	0

Group Code	Housing		Driver		Driver	Cam	IP 65
066	M	F	M	F	DD	CC	*

*: add "1" for IP 65

For cams please check pages: 175 (Cam-3)
For keys please check page:191

tel | +90 212 721 44 44 fax | +90 212 721 44 45

266 MINI QUARTER TURN – SPRING LOADED

RoHS

IP 65

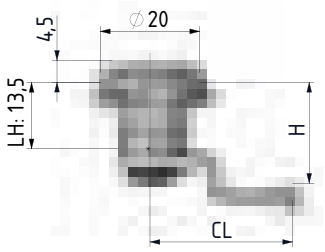

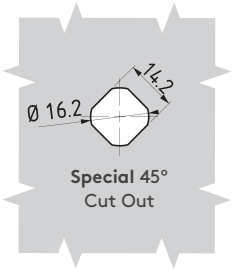





DRIVERS		M	F
6 mm Square			
DD		1	1
		1	2
26		2	0
7 mm Triangular		M	F
DD		1	1
		1	2
37		2	0
Slot		M	F
DD		1	1
		1	2
42		2	0

- **Stainless steel version: page 456**
- Specially designed internal spring provides 1 mm torsion
- Sealing washer not supplied

MATERIAL

HOUSING:	Zamak DIN-EN 1774-ZnAl4Cu1 or PA6 GFR 30
DRIVER:	Zamak DIN-EN 1774-ZnAl4Cu1 or PA6 GFR 30
CAM:	Steel

MATERIAL	M	FINISH	F
Zamak	1	Chrome plated	1
		Black coated	2
Plastic	2	No finish	0

Group Code	Housing		Driver		Driver	Cam	IP 65
266	M	F	M	F	DD	CC	*

*: add "1" for IP 65



Application Keys
Code: 267

For cams please check pages: 175 (Cam-3)
For keys please check page:191

MINI QUARTER TURN – WING KNOB

166



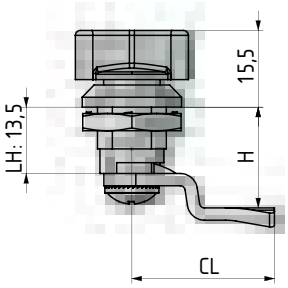

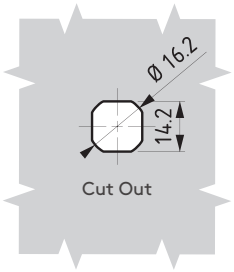



- Wing operates lock and serves as knob
- Sealing washer not supplied

MATERIAL

HOUSING:	Zamak DIN-EN 1774-ZnAl4Cu1 or PA6 GFR 30
KNOB:	Zamak DIN-EN 1774-ZnAl4Cu1 or PA6 GFR 30
CAM:	Steel

MATERIAL	M	FINISH	F
Zamak	1	Chrome plated	1
		Black coated	2
Plastic	2	No finish	0

Group Code	Housing		Knob		Cam
166	M	F	M	F	CC

For cams please check pages: 175 (Cam-3)

tel | +90 212 721 44 44 fax | +90 212 721 44 45

050 CAM LOCK – BALL

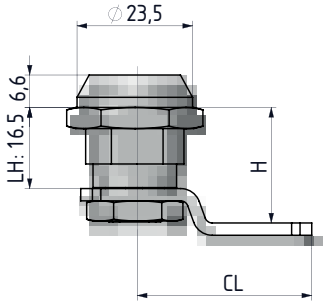

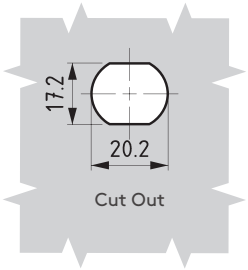

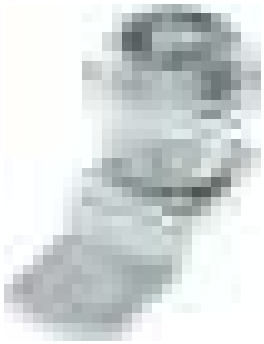

- Special index action to assist locking and keep cam in position
- Stable in open position

MATERIAL
HOUSING: Zamak DIN-EN 1774-ZnAl4Cu1
CAM: Steel

FINISH
Chrome plated



DRIVERS	
Slot	
DD 83	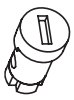
9 mm Triangular	
DD 39	
6 mm hexagon	
DD 66	

Application keys:


267-39


669-66

MATERIAL	M	FINISH	F
Zamak	1	Chrome plated	1
		Black coated	2

Group Code	Material	Finish	Driver	Cam
050	1	F	DD	CC

For cams please check pages: 175 (Cam-2)

PADLOCKABLE – KNOB

055



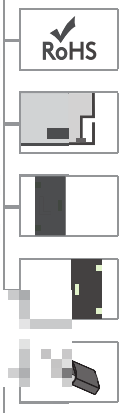

V: 1

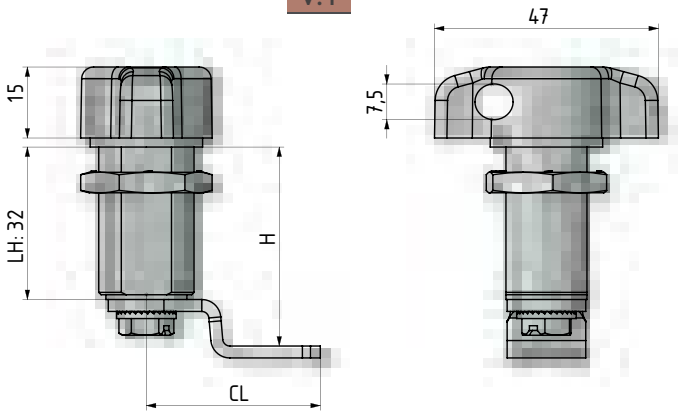

- Padlockable version
- Padlock shackle diameter
  Minimum 4 mm – Maximum 6 mm

MATERIAL

HOUSING:	Zamak DIN-EN 1774-ZnAl4Cu1
KNOB:	Zamak DIN-EN 1774-ZnAl4Cu1
CAM:	Steel

FINISH
Nickel Plated

Note: Not suitable to use with long-shackle padlocks.

Note: For ball application please contact Essentra Components

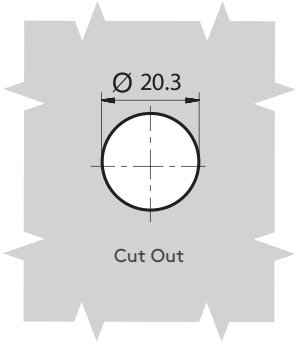

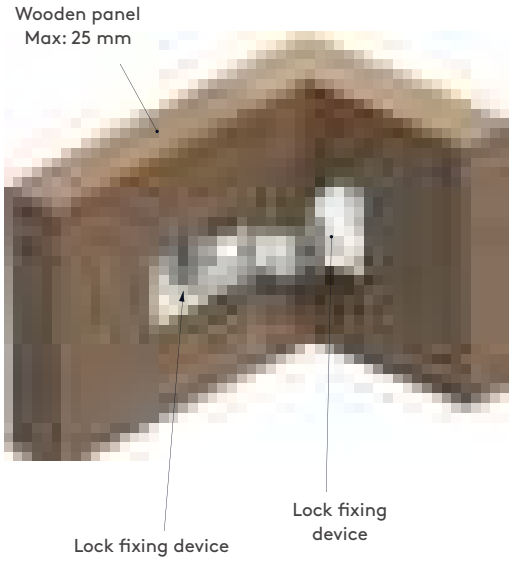



Group Code	Version	Cam	Door Direction
055	1	CC	

DOOR DIRECTION	
Right hand	001
Left hand	002

For cams please check pages: 175 (Cam-1)

tel | +90 212 721 44 44 fax | +90 212 721 44 45

055 PADLOCKABLE – KNOB

V: 5

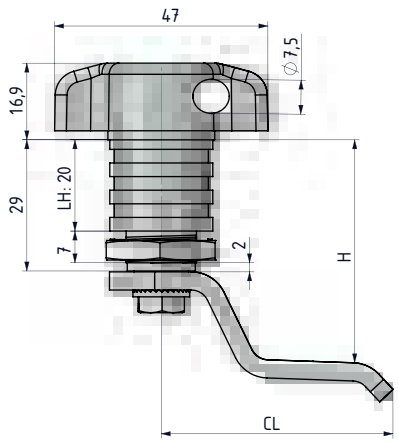

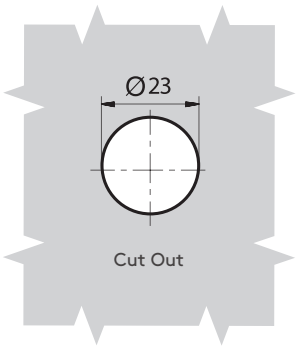

NEW

RoHS



- Padlockable version
- Padlock shackle diameter
  Minimum 4 mm – Maximum 6 mm

MATERIAL

HOUSING:	Zamak DIN-EN 1774-ZnAl4Cu1
KNOB:	Zamak DIN-EN 1774-ZnAl4Cu1
CAM:	Steel

FINISH
Nickel Plated

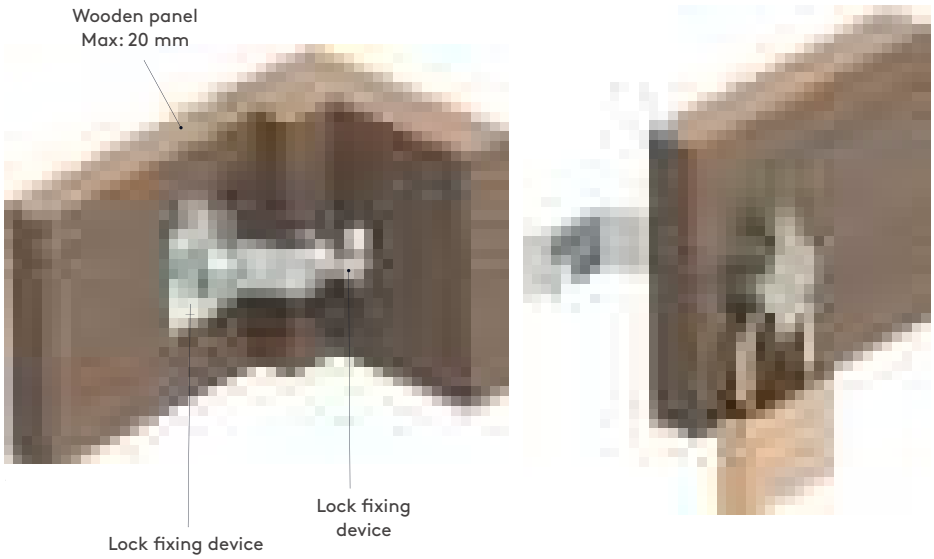

Note: Not suitable to use with long-shackle padlocks.

Note: For different cams please contact Essentra Components

Group Code	Version	Cam	Door Direction
055	5	CC	

DOOR DIRECTION	
Right hand	001
Left hand	002

For cams please check pages: 175

PADLOCKABLE – KNOB

055

NEW

RoHS

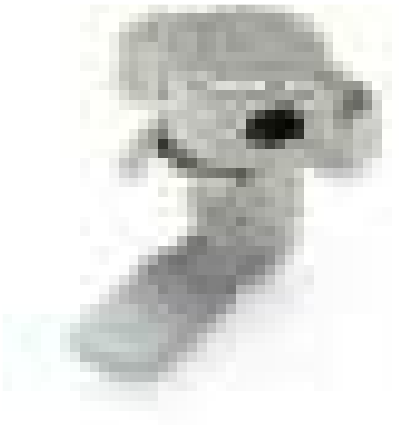

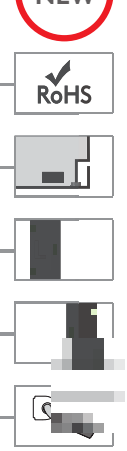

V: 4

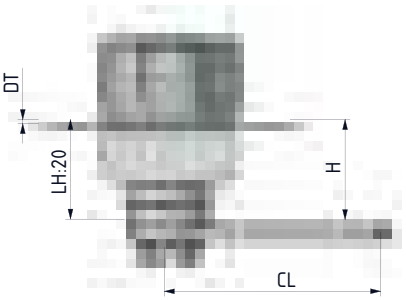

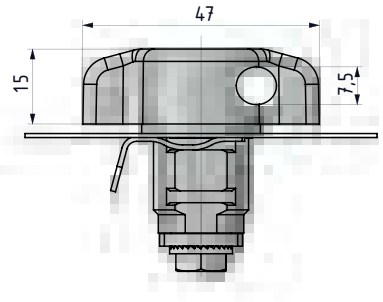

- Easy assembly by clip
- Can be used for panel thickness 0.8 to 1.2 mm
- Padlockable version
- Padlock shackle diameter Minimum 4 mm – Maximum 6 mm

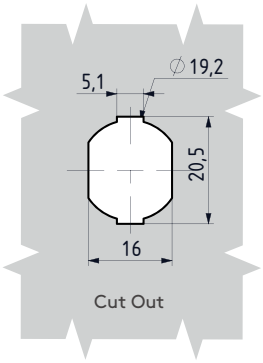

MATERIAL

HOUSING:	Zamak DIN-EN 1774-ZnAl4Cu1
KNOB:	Zamak DIN-EN 1774-ZnAl4Cu1
CAM:	Steel

FINISH
Nickel Plated







Note: Not suitable to use with long-shackle padlocks.

Note: For ball application please contact Essentra Components

Group Code	Version	Cam	Door Direction
055	4	CC	

DOOR DIRECTION	
Right hand	001
Left hand	002

For cams please check pages: 175 (Cam-1)

tel | +90 212 721 44 44 fax | +90 212 721 44 45

055 PADLOCKABLE – KNOB

V: 3

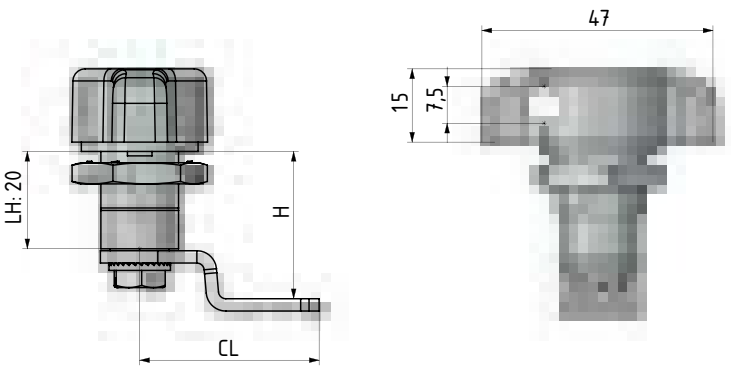

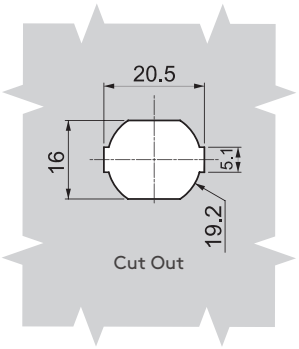



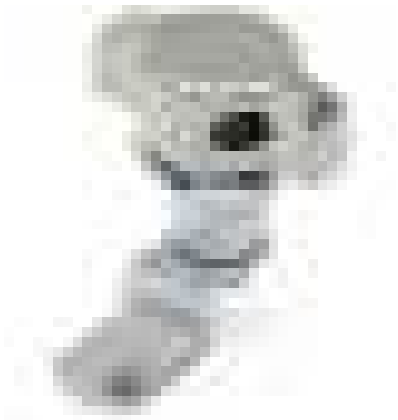

- Padlockable version
- Padlock shackle diameter
  Minimum 4 mm – Maximum 6 mm

MATERIAL

HOUSING:	Zamak DIN-EN 1774-ZnAl4Cu1
KNOB:	Zamak DIN-EN 1774-ZnAl4Cu1
CAM:	Steel

FINISH
Nickel Plated

Note: Not suitable to use with long-shackle padlocks.

Note: For ball application please contact Essentra Components

Group Code	Version	Cam	Door Direction
055	3	CC	

DOOR DIRECTION	
Right hand	001
Left hand	002

For cams please check pages: 175 (Cam-1)

QUARTER TURN – SPRING LOADED

350



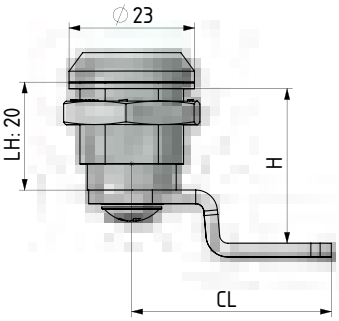

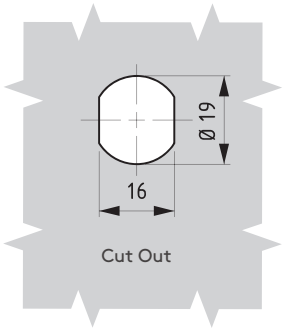

- Vibration proof quarter turn
- Opening the lock only possible by pushing and rotating the driver by the key
- Nickel plating is an option

MATERIAL

HOUSING:	Zamak DIN-EN 1774-ZnAl4Cu1
DRIVER:	Zamak DIN-EN 1774-ZnAl4Cu1
NUT:	Zamak DIN-EN 1774-ZnAl4Cu1
CAM:	Steel

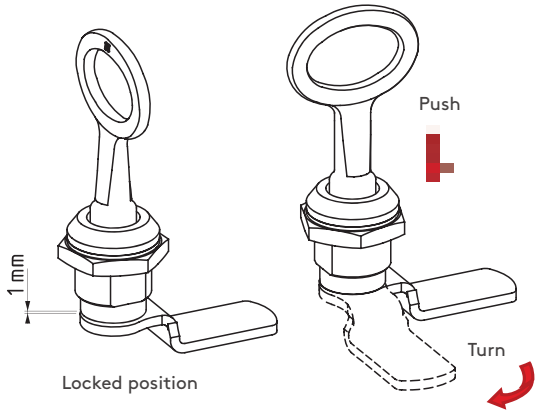

DRIVERS

		M	F
3 mm Double Bit			
DD		1	1
		1	2
13		1	4
7 mm Triangular		1	1
DD		1	1
		1	2
37		1	4
7 mm Square			
DD		1	1
		1	2
27		1	4
Slot			
DD		1	1
		1	2
42		1	4

DUST CAP

050 A4

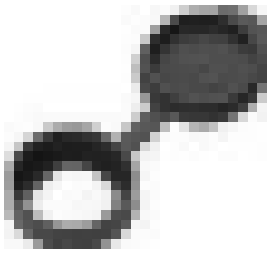

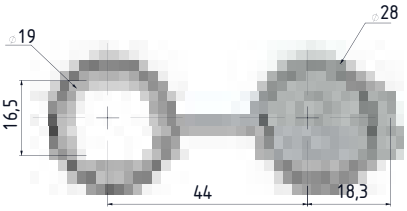

MATERIAL	M	FINISH	F
Zamak	1	Chrome plated	1
		Black coated	2
		Nikel kaplama	4

Group Code	Material	Finish	Driver No	Cam
350	1	F	DD	CC

For cams please check pages: 175 (Cam-1)
For keys please check page:191

tel | +90 212 721 44 44 fax | +90 212 721 44 45

055 CABINET LOCK

NEW

RoHS





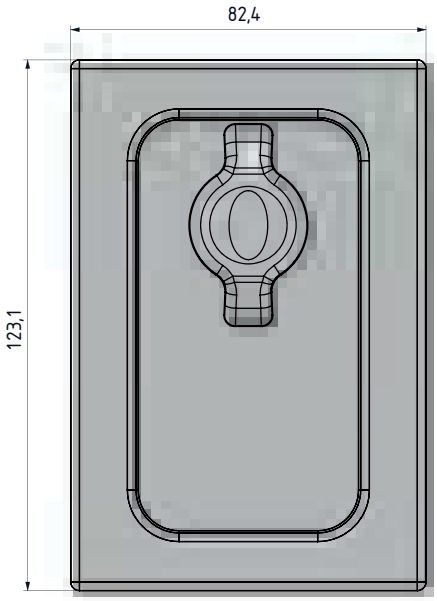

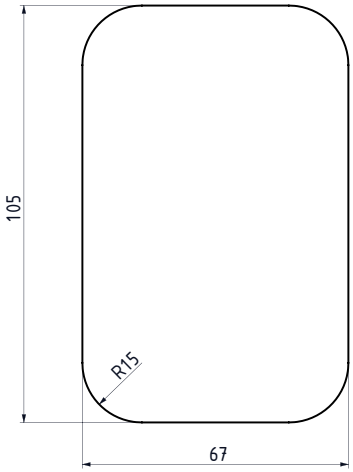

Cut Out

MATERIAL

BODY:	PA6 GFR 30
KNOB:	Zamak DIN-EN 1774-ZnAl4Cu1 or PA6 GFR 30
CAM:	Steel

FINISH

Body: Nickel Plated

Group Code	Version	Cam	Door Direction
055	6	CC	

DOOR DIRECTION	
Right hand	001
Left hand	002

For cams please check pages: 175 (Cam-1)

QUARTER-TURN LOCK 666

NEW

RoHS



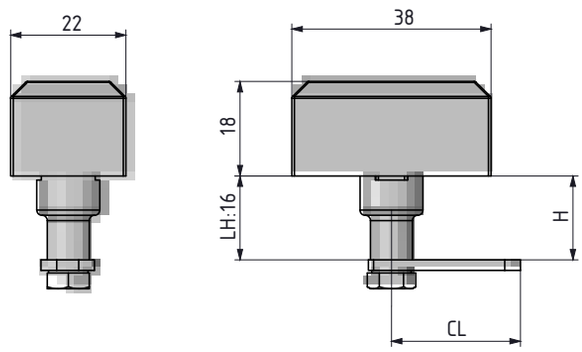

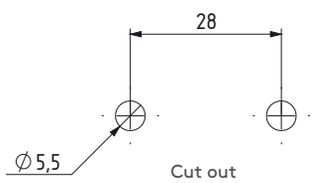

MATERIAL

BODY:	Zamak DIN-EN 1774-ZnAl4Cu1
DRIVER:	Stainless Steel
CAM:	Stainless Steel

FINISH

Chrome plated or Black coated

.

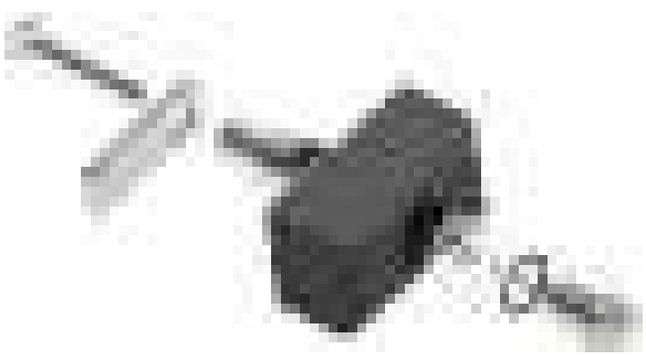

MATERIAL	M	FINISH	F
Zamak	1	Chrome plated	1
		Black coated	2
Stainless Steel	4	No finish	0

Group Code	Housing		Driver		Driver No	Cam
666	1	F	4	0	DD	CC

For cams please check pages: 175

For drivers please check pages: 458

tel | + 90 212 721 44 44 fax | + 90 212 721 44 45

203

QUARTER TURN – WING KNOB

V: 6

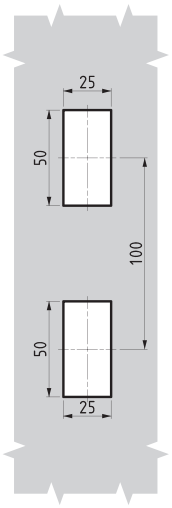

Cut Out

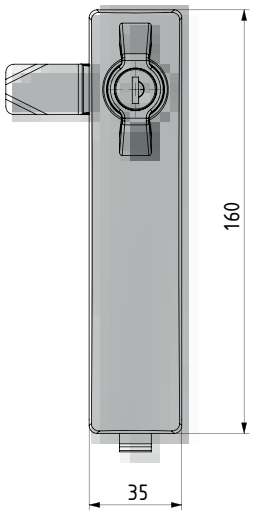

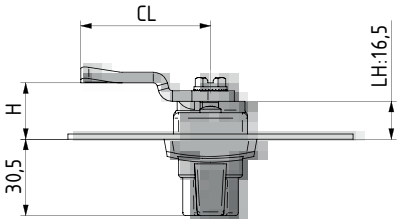

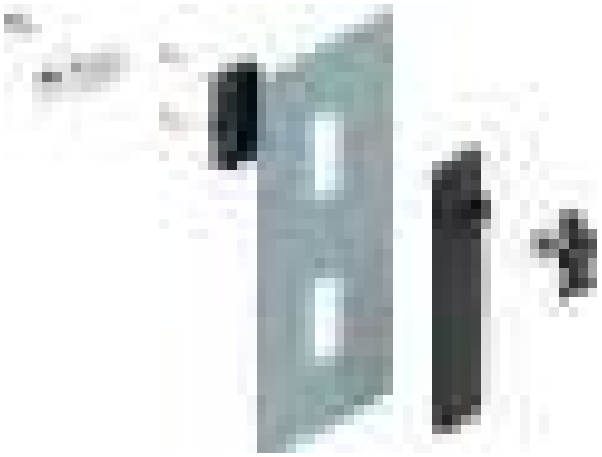

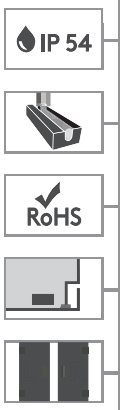



MATERIAL

BODY:	PA6 GFR 30
KNOB:	Zamak DIN-EN 1774-ZnAl4Cu1 or PA6 GFR 30
CAM:	Steel
GASKET:	Polyurethane

CYLINDER	SPECIFICATIONS	DD
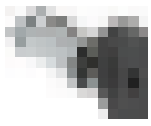	No cylinder	00
	Keyed alike	01
	Keyed differ	02
	Euro key (5333)	05
	CH751 (Stainless steel dust cap)	07

Group Code	Version	Cylinder	Cam
203	6	DD	CC

For cams please check pages: 170 - 171

QUARTER-TURN LOCK 103

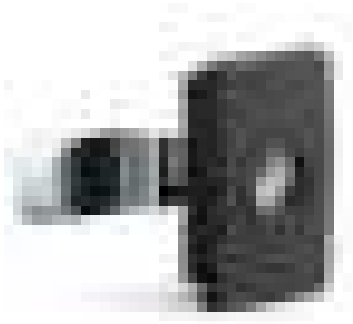

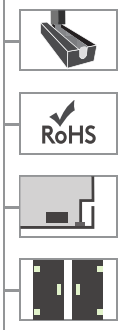

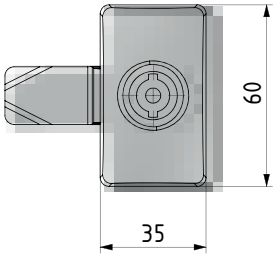

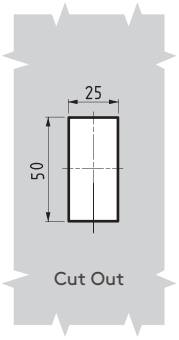

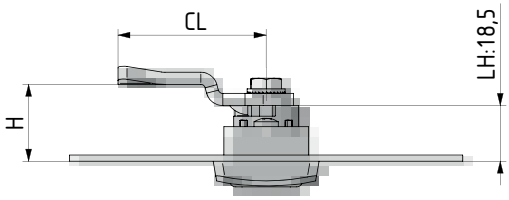

MATERIAL

BODY:	PA6 GFR 30
DRIVER:	Zamak DIN-EN 1774-ZnAl4Cu1 or PA6 GFR 30
CAM:	Steel
GASKET:	Polyurethane



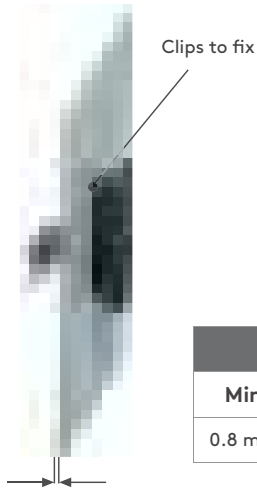

DT	
Min	Max
0.8 mm	1.8 mm

V: 1

Wih cover fix

V: 6

Clips to fix

MATERIAL	M	FINISH	F
Zamak	1	Chrome plated	1
		Black coated	2

Group Code	Version	Driver		Driver No	Cam
103	V	M	F	DD	CC

For cams please check pages: 170 - 171
For drivers please check page: 194
For keys please check pages: 189 - 191

tel | +90 212 721 44 44 fax | +90 212 721 44 45

203 QUARTER-TURN LOCK

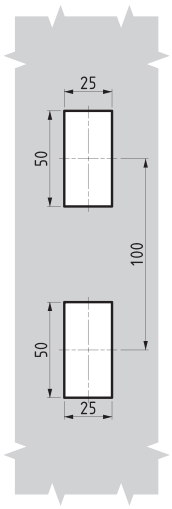

Cut Out

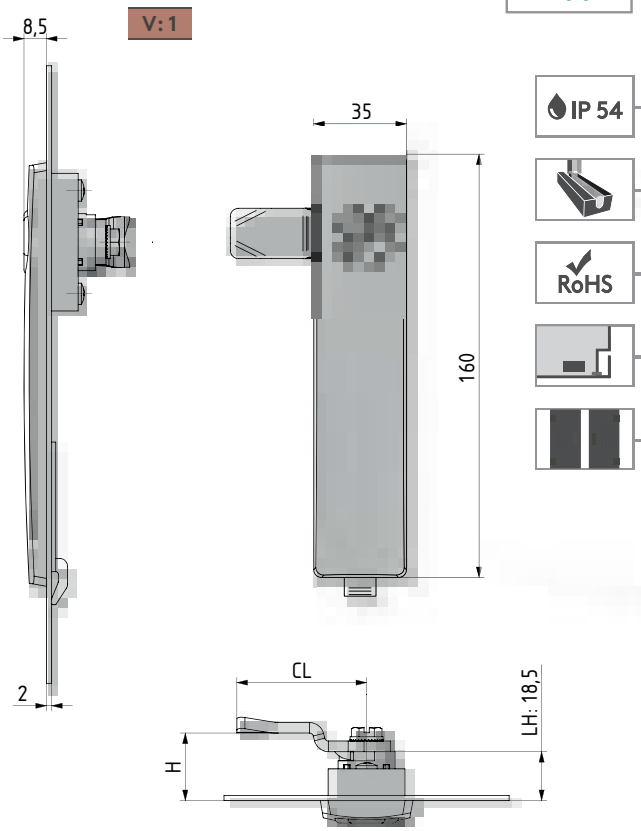

IP 54

RoHS

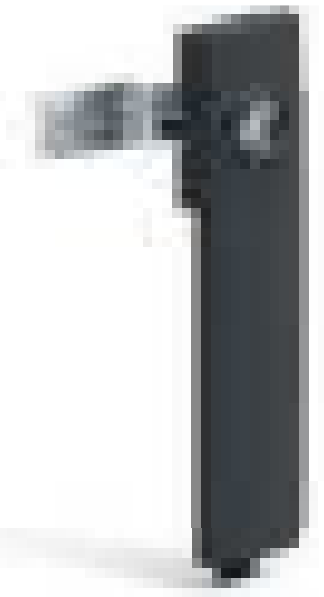

MATERIAL

BODY:	PA6 GFR 30
DRIVER:	Zamak DIN-EN 1774-ZnAl4Cu1 or PA6 GFR 30
CAM:	Steel
GASKET:	Polyurethane



MATERIAL	M	FINISH	F
Zamak	1	Chrome plated	1
		Black coated	2

Group Code	Version	Driver		Driver No	Cam
203	1	M	F	DD	CC

For cams please check pages: 170 - 171
For drivers please check page: 194
For keys please check pages: 189 - 191

FAST FIND INDEX



248 249 250 251 252

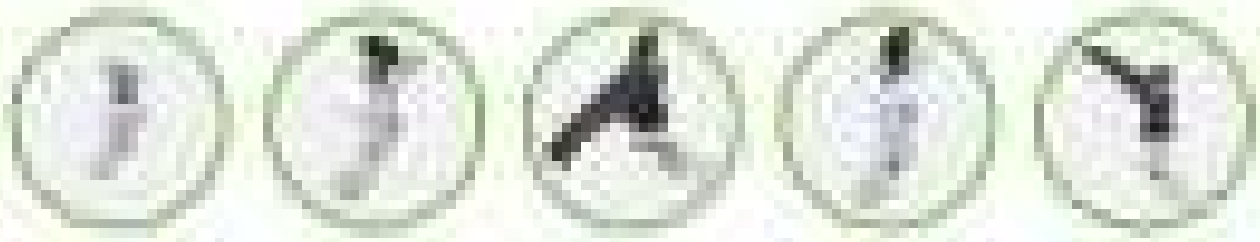

253 254 255 256 257

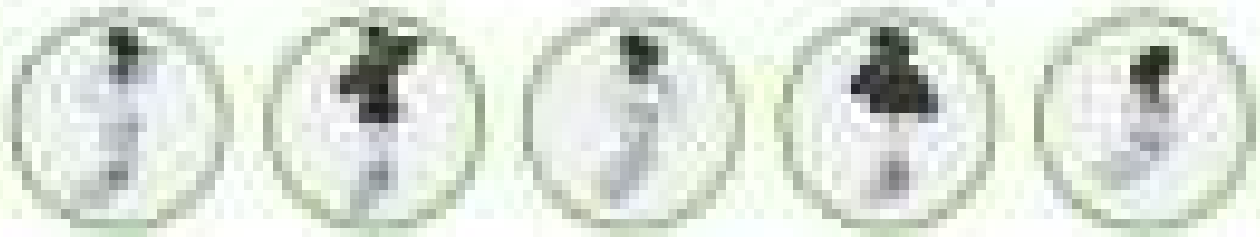

258 259 260 261 262

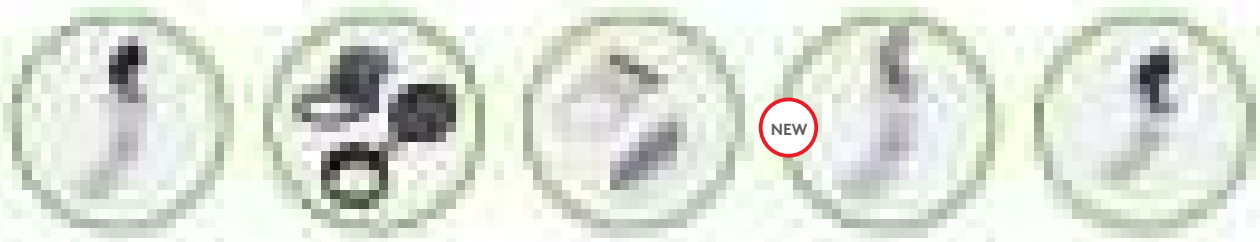

263 264 264 265 266

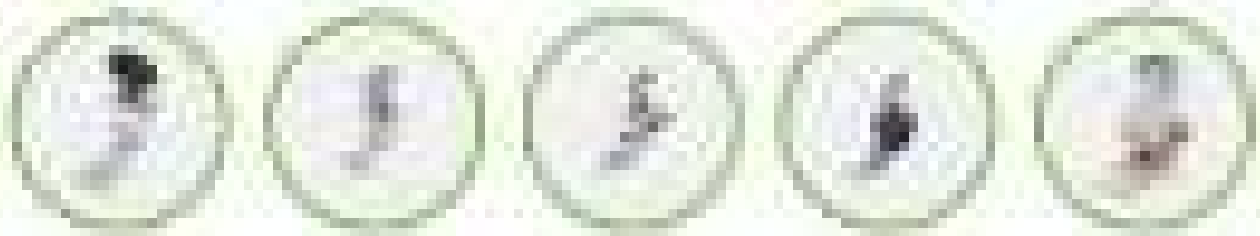

267 268 269 270 271



CAM LOCKS

246-271

mesan
ESSENTRA COMPONENTS

e-mail | info@mesanlocks.com web | www.mesanlocks.com

SPRING CAM LOCK 163



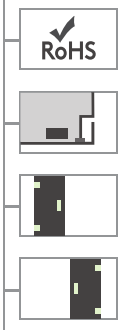

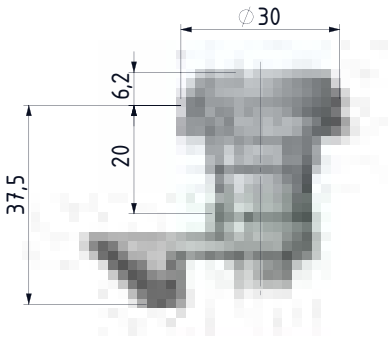

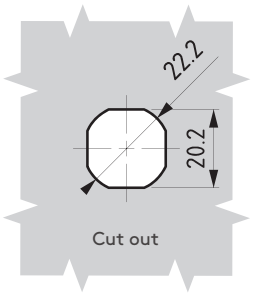

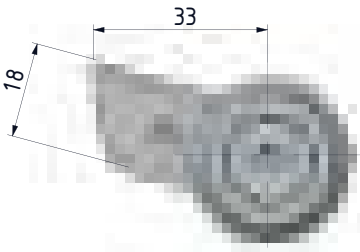



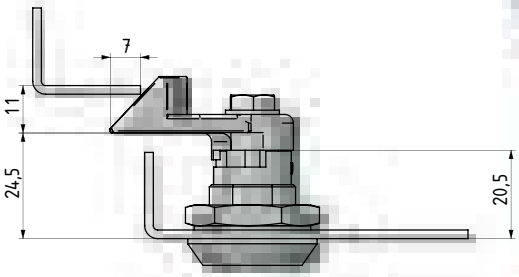

- Spring-loaded cam provides depress-to-lock action
- Distance between inside of lock face and front of cam fixed at 24 mm
- There is no IP 65 version of this lock,due to spring loaded cam

APPLICATIONS
Electric panels, machinery covers

MATERIAL

HOUSING:	Zamak DIN-EN 1774-ZnAl4Cu1
CYLINDER:	Zamak DIN-EN 1774-ZnAl4Cu11
CAM:	Steel
GASKET:	Rubber

MATERIAL	M	FINISH	F
Zamak	1	Chrome plated	1
		Black coated	2

DOOR DIRECTION	
Right hand	001
Left hand	002

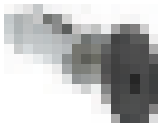

CYLINDER	DD
Keyed alike (Stainless steel dust cap)	03
Keyed differ (Stainless steel dust cap)	32
Master System	04
Euro key (5333)	05
CH751 (Stainless steel dust cap	07

Group Code	Material	Finish	Cylinder	Door Direction
163	1	F	DD	

tel | +90 212 721 44 44 fax | +90 212 721 44 45

063

CAM LOCK

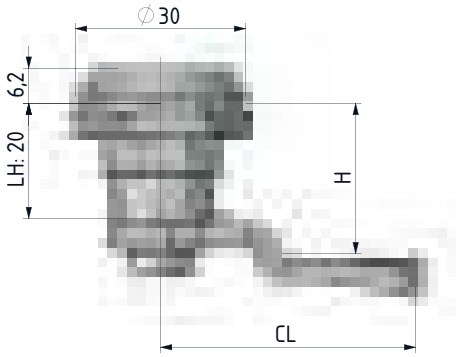

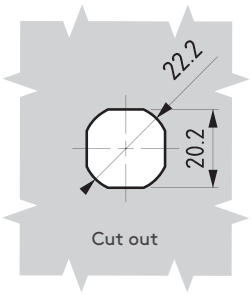

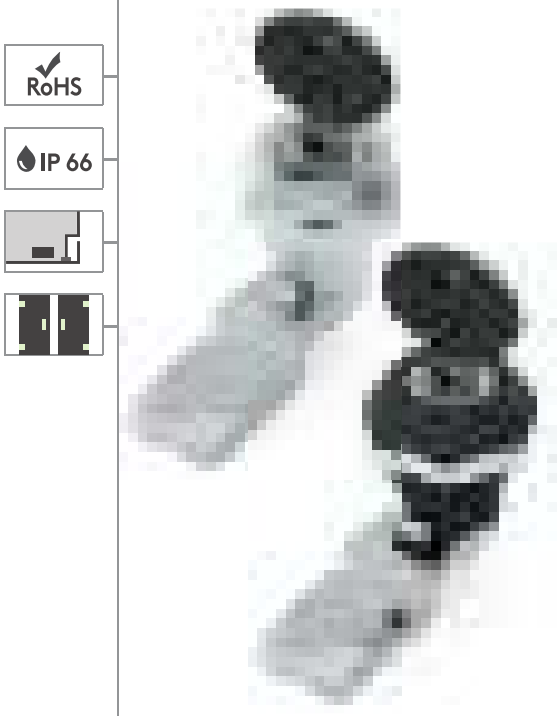



- **Stainless steel version: page 476**
- Quarter-turn operation
- Body length 20.5 mm (Please be sure to order appropriate cam)
- Available in all die-castzinc alloy or with polyamide housing

MATERIAL

HOUSING:	Zamak DIN-EN 1774-ZnAl4Cu1 or PA6 GFR 30
CAM:	Steel or Plastic
GASKET:	Rubber

MATERIAL	M	FINISH	F
Zamak	1	Chrome plated	1
		Black coated	2
Plastic	2	No finish	0

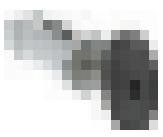

CYLINDER	DD
Keyed alike (Stainless steel dust cap)	03
Keyed differ (Stainless steel dust cap)	32
Master System	04
Euro key (5333)	05
CH751 (Stainless steel dust cap	07

Group Code	Material	Finish	Cylinder	Cam
063	M	F	DD	CC

For cams please check pages: 170 - 171

CAM LOCK – EASY FIXING

761

NEW

RoHS

IP 65



- Easy assembly by plastic clips
- Applicable on different panel thicknesses
- Standard cut out

MATERIAL

HOUSING: Polyamide DIN-EN ISO 1043-1 PA6 GFR 30

CAM: Plastic or steel



320.02.221

BOLT COVER (For grounding)

- Can order separately (only for plastic cams)

For cams please check pages: 170 - 171

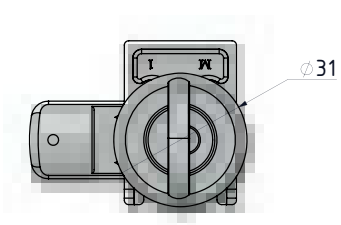

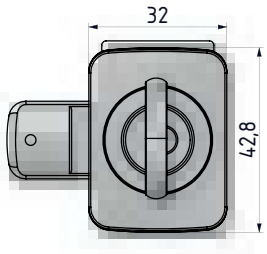

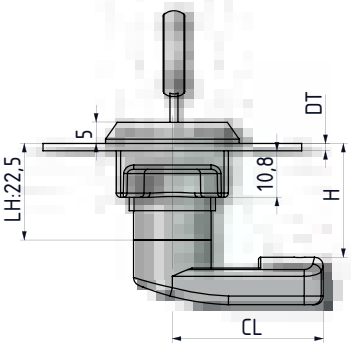

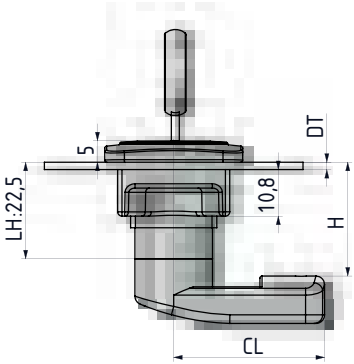

V: 1

V: 2

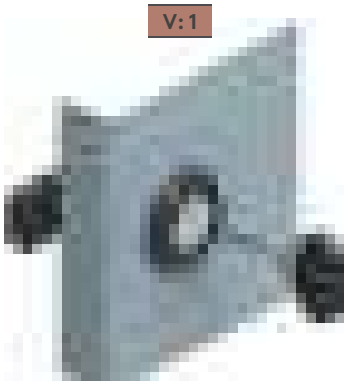

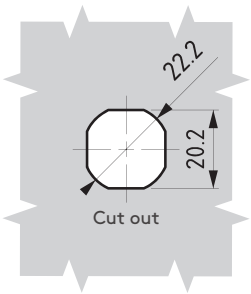

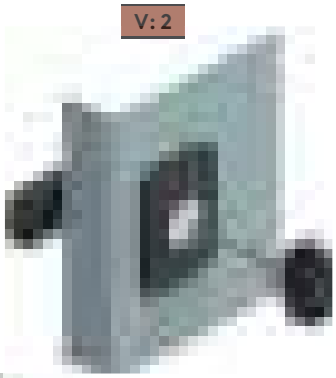

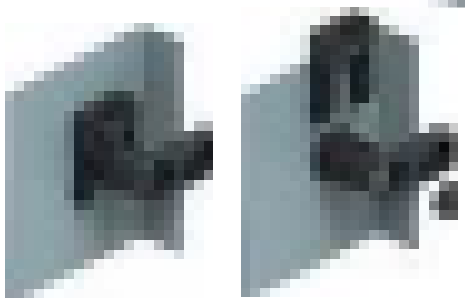

DOOR THICKNESS	DT
1.2 -1.8 mm panel	12
1.8 -2.3 mm panel	23

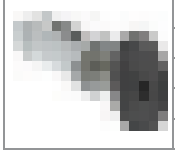

CYLINDER	DD
Keyed alike (Stainless steel dust cap)	03
Keyed differ (Stainless steel dust cap)	32
Master System	04
Euro key (5333)	05
CH751 (Stainless steel dust cap	07

Group Code	Version	Housing		Cylinder	Door Thickness	Cam
761	V	2	0	DD	DT	CC

tel | +90 212 721 44 44 fax | +90 212 721 44 45

261 KNOB LOCK

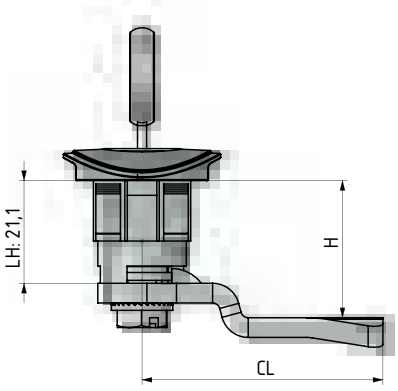

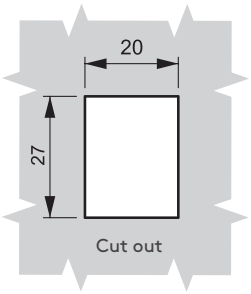

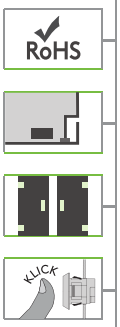



- Clip fixing for easy assembly
- Mounting nut not required
- Special 20 mm x 26 mm cut out
- No IP 65 version of this lock
- 1.8 mm maximum panel thickness

MATERIAL

HOUSING:	Polyamide DIN-EN ISO 1043-1 PA6 GFR 30
CAM:	Steel or plastic

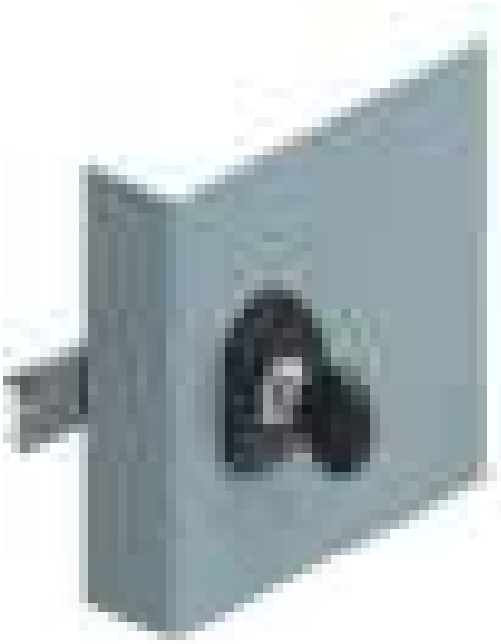

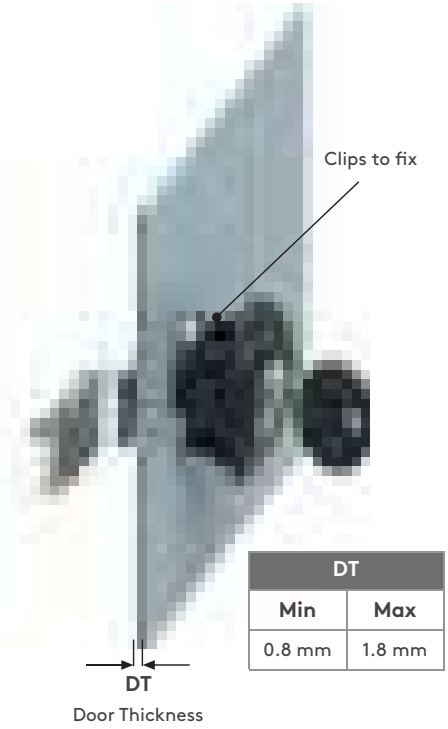

DT	
Min	Max
0.8 mm	1.8 mm

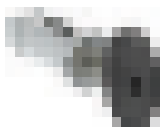

CYLINDER	DD
Keyed alike (Stainless steel dust cap)	03
Keyed differ (Stainless steel dust cap)	32
Master System	04
Euro key (5333)	05
CH751 (Stainless steel dust cap	07

Group Code	Material	Finish	Cylinder	Cam
261	2	0	DD	CC

For cams please check pages: 170 - 171

CAM LOCK – WING KNOB

065



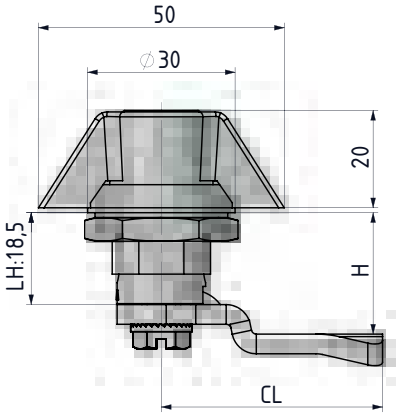

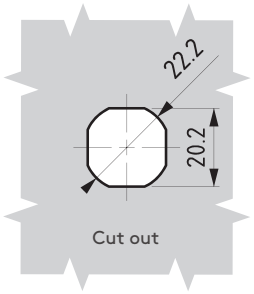



- **Stainless steel version: page 474**
- Quarter-turn operation
- Available in all die-cast zinc alloy or with polyamide wing knob and housing
- Optional blind version

MATERIAL

HOUSING:	Zamak DIN-EN 1774-ZnAl4Cu1
CAM:	Steel or Plastic
GASKET:	Rubber

No cylinder '00'



MATERIAL	M	FINISH	F
Zamak	1	Chrome plated	1
		Black coated	2
Plastic	2	No finish	0

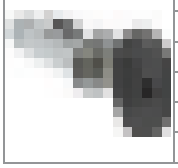

CYLINDER	DD
No cylinder	00
Keyed alike (Stainless steel dust cap)	03
Keyed differ (Stainless steel dust cap)	32
Master System	04
Euro key (5333)	05
CH751 (Stainless steel dust cap	07

Group Code	Material	Finish	Cylinder	Cam
065	M	F	DD	CC

For cams please check pages: 170 - 171

tel | +90 212 721 44 44 fax | +90 212 721 44 45

165 MINI CAM LOCK – WING KNOB

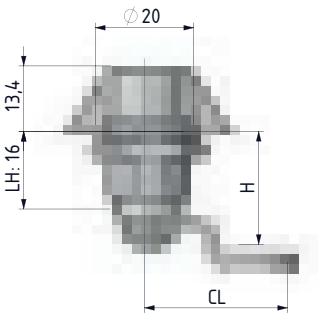

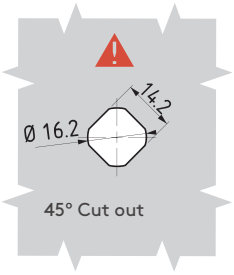



- Quarter-turn operation
- Available all die-cast zinc alloy
- Suitable for small cabinets

MATERIAL

HOUSING:	Zamak DIN-EN 1774-ZnAl4Cu1
KNOB:	Zamak DIN-EN 1774-ZnAl4Cu1
CAM:	Steel



MATERIAL	M	FINISH	F
Zamak	1	Chrome plated	1
		Black coated	2

	CYLINDER	DD
	Keyed alike (Stainless steel dust cap)	03
	Keyed differ (Stainless steel dust cap)	32

Group Code	Material	Finish	Cylinder	Cam
165	1	F	DD	CC

For cams please check page: 175

CAM LOCK – T HANDLE

110



RoHS

IP 65

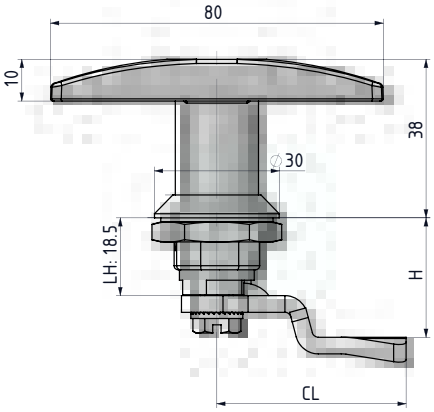

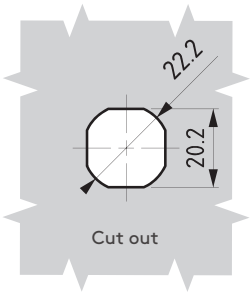



- **Stainless steel version: page 472**
- Quarter-turn operation
- Available in all die-cast zinc alloy or with polyamide wing handle and housing
- Optional blind version

MATERIAL

HANDLE:	Zamak DIN-EN 1774-ZnAl4Cu1 or PA6
HOUSING:	Zamak DIN-EN 1774-ZnAl4Cu1
CAM:	Steel or Plastic
GASKET:	Rubber

MATERIAL	M	FINISH	F
Zamak	1	Chrome plated	1
		Black coated	2
Plastic	2	No finish	0

	CYLINDER	DD
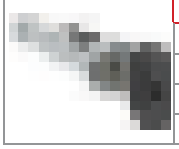	No cylinder	00
	Keyed alike (Stainless steel dust cap)	03
	Keyed differ (Stainless steel dust cap)	32
	Euro key (5333)	05
	CH751 (Stainless steel dust cap	07

Group Code	Material	Finish	Cylinder	Cam
110	M	F	DD	CC

For cams please check pages: 170 - 171

tel | +90 212 721 44 44 fax | +90 212 721 44 45

111 CAM LOCK – L HANDLE

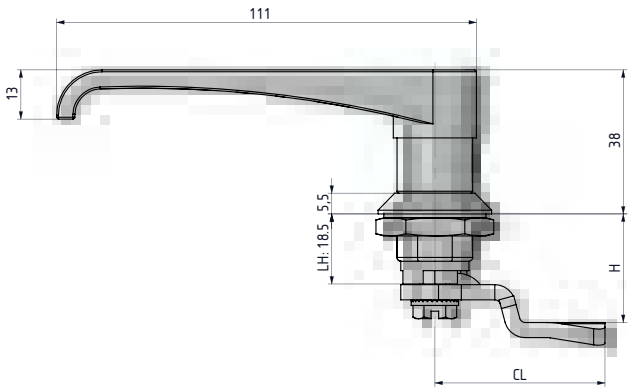

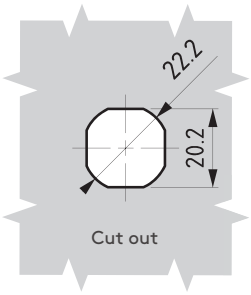





- **Stainless steel version: page 473**
- Quarter-turn operation
- Available in all die-cast zinc alloy or with polyamide wing handle and housing
- Optional blind version

MATERIAL

HANDLE:	Zamak DIN-EN 1774-ZnAl4Cu1 or PA6
HOUSING:	Zamak DIN-EN 1774-ZnAl4Cu1
CAM:	Steel or Plastic
GASKET:	Rubber

MATERIAL	M	FINISH	F
Zamak	1	Chrome plated	1
		Black coated	2
Plastic	2	No finish	0

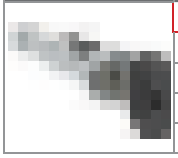

CYLINDER	DD
No cylinder	00
Keyed alike (Stainless steel dust cap)	03
Keyed differ (Stainless steel dust cap)	32
Euro key (5333)	05
CH751 (Stainless steel dust cap	07

Group Code	Material	Finish	Cylinder	Cam
111	M	F	DD	CC

For cams please check pages: 170 - 171

CAM LOCK – T HANDLE

064



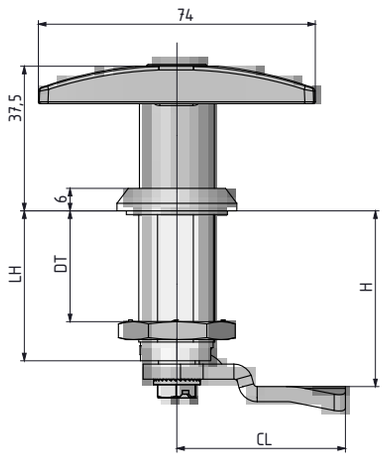

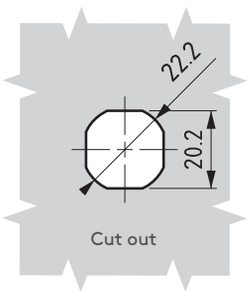

- Quarter-turn operation
- Available in all die-cast zinc alloy or with polyamide wing handle and housing
- Optional blind version

MATERIAL

HANDLE:	Zamak DIN-EN 1774-ZnAl4Cu1 or PA6
HOUSING:	Zamak DIN-EN 1774-ZnAl4Cu1
CAM:	Steel or Plastic
GASKET:	Rubber



D T	LH
20	30
30	40
40	50
50	60

MATERIAL	M	FINISH	F
Zamak	1	Chrome plated	1
		Black coated	2
Plastic	2	No finish	0



CYLINDER	DD
No cylinder	00
Keyed alike (Stainless steel dust cap)	03
Keyed differ (Stainless steel dust cap)	32
Euro key (5333)	05
CH751 (Stainless steel dust cap	07

Group Code	Handle	Door Thickness	Material	Finish	Cylinder	Cam
064	110	DT	M	F	DD	CC

For cams please check pages: 170 - 171

tel | +90 212 721 44 44 fax | +90 212 721 44 45

064 CAM LOCK – L HANDLE

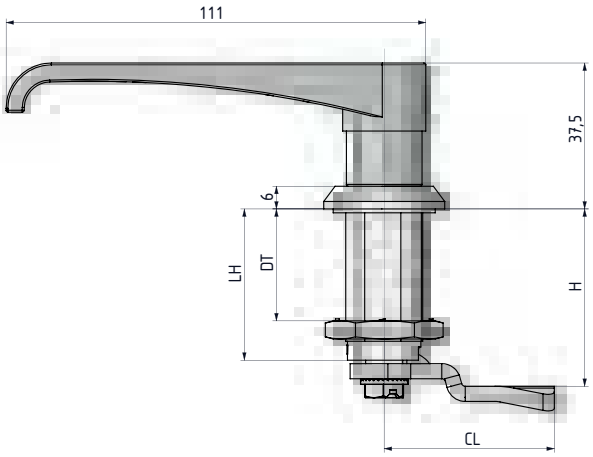

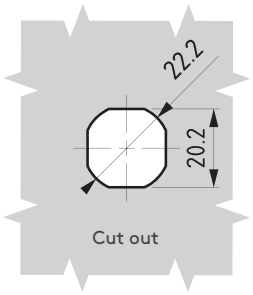





D T	LH
20	30
30	40
40	50
50	60

- Quarter-turn operation
- Available in all die-cast zinc alloy or with polyamide wing handle and housing
- Optional blind version

MATERIAL

HANDLE:	Zamak DIN-EN 1774-ZnAl4Cu1 or PA6
HOUSING:	Zamak DIN-EN 1774-ZnAl4Cu1
CAM:	Steel or Plastic
GASKET:	Rubber

MATERIAL	M	FINISH	F
Zamak	1	Chrome plated	1
		Black coated	2
Plastic	2	No finish	0

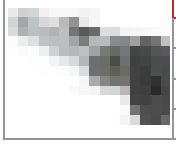

CYLINDER	DD
No cylinder	00
Keyed alike (Stainless steel dust cap)	03
Keyed differ (Stainless steel dust cap)	32
Euro key (5333)	05
CH751 (Stainless steel dust cap	07

Group Code	Handle	Door Thickness	Material	Finish	Cylinder	Cam
064	111	DT	M	F	DD	CC

For cams please check pages: 170 - 171

COMPRESSION LOCK – T HANDLE

240



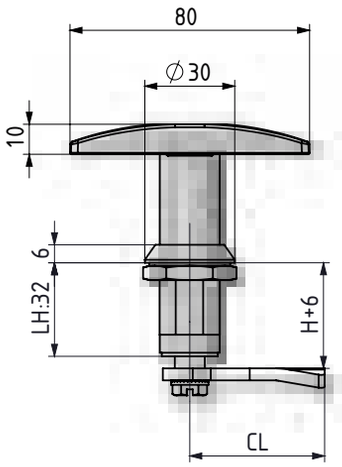

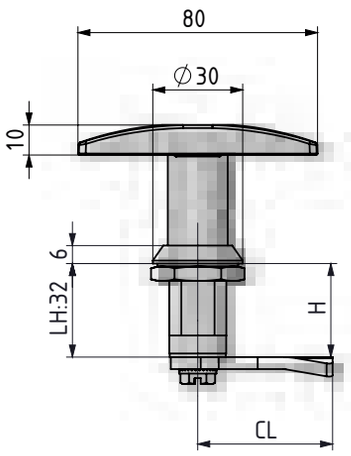

- Used for cabinets require better sealing under vibrating conditions
- Provides 6 mm of compression
- Provides noise isolation
- Standard cams without stopper required for these locks

MATERIAL

HOUSING:	Zamak DIN-EN 1774-ZnAl4Cu1
HANDLE:	Zamak DIN-EN 1774-ZnAl4Cu1
CAM:	Steel
GASKET:	Rubber

FINISH
Chrome or black coated

V: 1

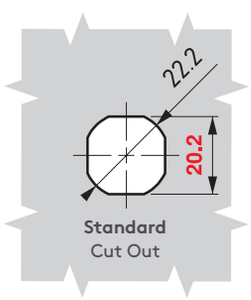

Standard
Cut Out

Attention

V: 3

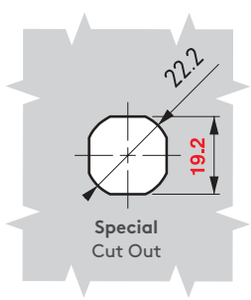

Special
Cut Out

MATERIAL	M	FINISH	F
Zamak	1	Chrome plated	1
		Black coated	2



CYLINDER	DD
No cylinder	00
Keyed alike (Stainless steel dust cap)	03
Keyed differ (Stainless steel dust cap)	32
CH751 (Stainless steel dust cap	07

Group Code	Version	Material	Finish	Cylinder	Cam
240	V	1	F	DD	CC

For cams please check page:: 172 - 173

tel | +90 212 721 44 44 fax | +90 212 721 44 45

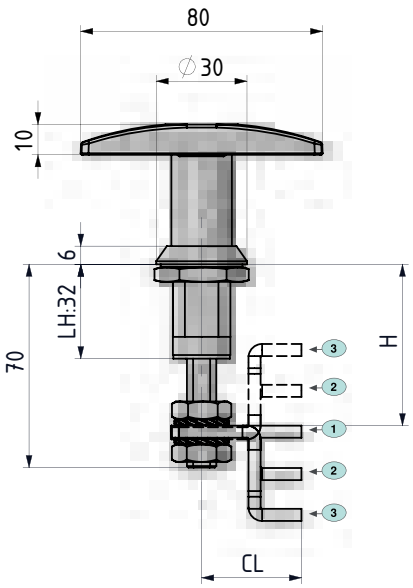

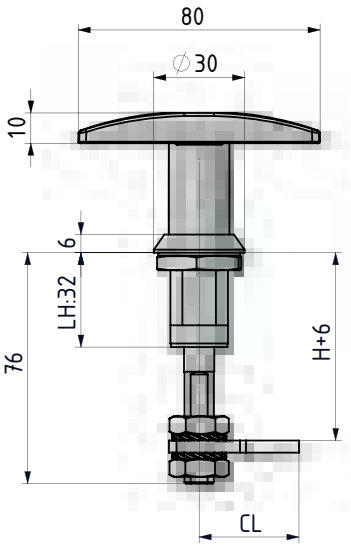

240 COMPRESSION LOCK – T HANDLE



CAM	STOCK CODE	CC	CH	CL	POSITION	H: GRIP MIN	H: GRIP MAX
1	30403565Y	01	0	33	Flat	41	58
2	30403566Y	02	14	33	Up	27	44
					Down	55	72
3	30403567Y	03	27,5	33	Up	13,5	30,5
					Down	68	85

- For the cabinets that require better sealing under vibrating conditions
- Provides 6 mm of compression
- Wide grip range with adjustable screw
- Provides noise isolation
- Three cam alternatives available

MATERIAL

HOUSING:	Zamak DIN-EN 1774-ZnAl4Cu1
HANDLE:	Zamak DIN-EN 1774-ZnAl4Cu1
CAM:	Steel
GASKET:	Rubber

FINISH
Chrome or black coated

V: 2

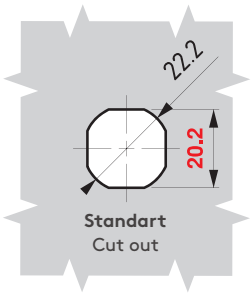

Attention

V: 4

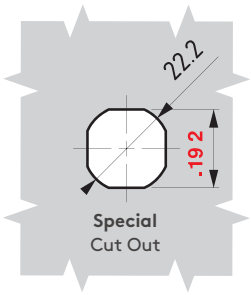

MATERIAL	M	FINISH	F
Zamak	1	Chrome plated	1
		Black coated	2

	CYLINDER	DD
	No cylinder	00
	Keyed alike (Stainless steel dust cap)	03
	Keyed differ (Stainless steel dust cap)	32
	CH751 (Stainless steel dust cap	07

Group Code	Version	Material	Finish	Cylinder	Cam
240	V	1	F	DD	CC

FIXING DEVICE

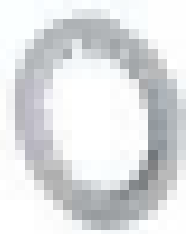

- Can be ordered separately
ORDER CODE: 060 A3.

COMPRESSION LOCK – WING KNOB

340



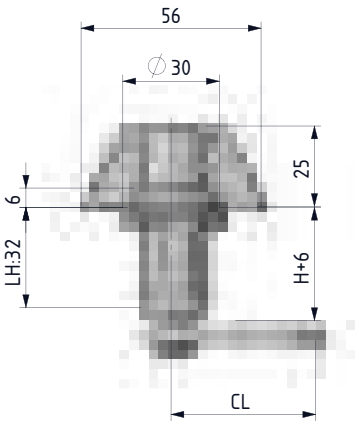

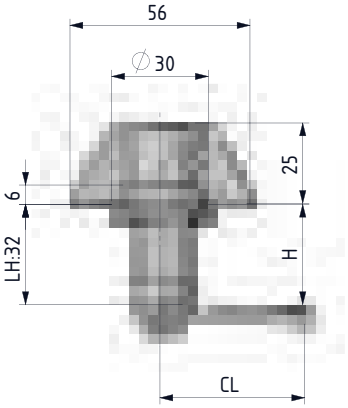

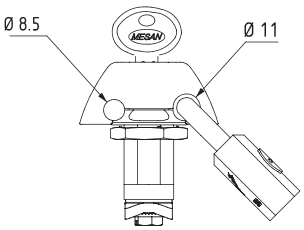

Padlock application

- Used for cabinets that require better sealing under vibrating conditions
- Provides 6 mm of compression
- Provides noise isolation
- Standard cams without stopper required for these locks
- Shackle diameter is
  for 11 mm hole: min. 8.5 mm
  max. 10 mm
  for 8.5 mm hole:
  min. 6 mm
  max. 7.5 mm

MATERIAL

HOUSING:	Zamak DIN-EN 1774-ZnAl4Cu1
KNOB:	Zamak DIN-EN 1774-ZnAl4Cu1
CAM:	Steel
GASKET:	Rubber

FINISH
Chrome or black coated

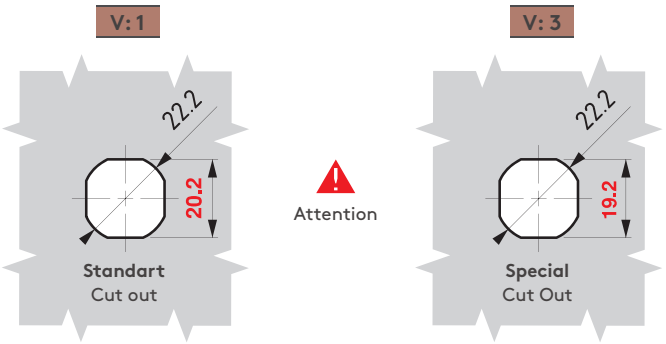

MATERIAL	M	FINISH	F
Zamak	1	Chrome plated	1
		Black coated	2

	CYLINDER	DD
	No cylinder	00
	Keyed alike (Stainless steel dust cap)	03
	Keyed differ (Stainless steel dust cap)	32
	CH751 (Stainless steel dust cap	07

Group Code	Version	Material	Finish	Cylinder	Cam	Padlock *
340	V	1	F	DD	CC	

*: add **"1"** for padlock application.

For cams please check page:: 172 - 173

tel | +90 212 721 44 44 fax | +90 212 721 44 45

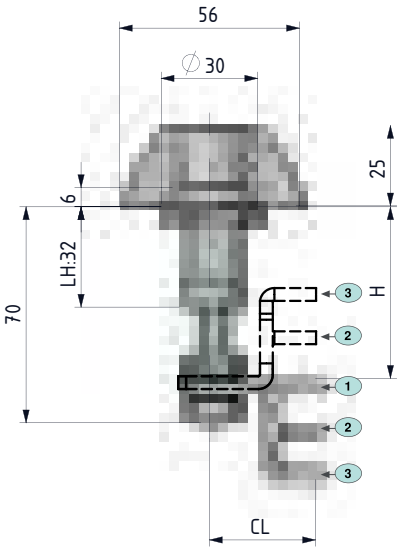

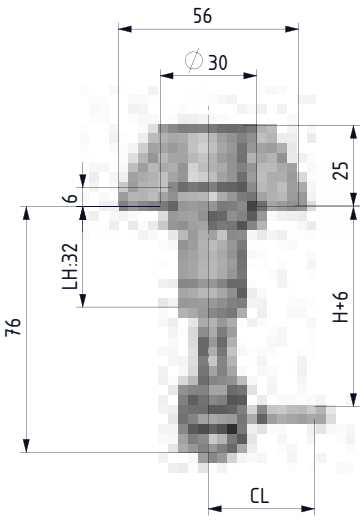

340

COMPRESSION LOCK – WING KNOB



CAM	STOCK CODE	CC	CH	CL	POSITION	H: GRIP MIN	H: GRIP MAX
1	30403565Y	01	0	33	Flat	41	58
2	30403566Y	02	14	33	Up	27	44
					Down	55	72
3	30403567Y	03	27,5	33	Up	13,5	30,5
					Down	68	85

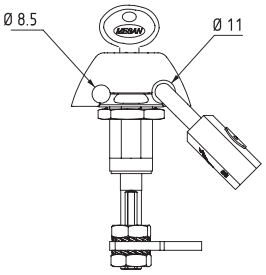

Padlock application

- For the cabinets that require better sealing under vibrating conditions
- Lock provides 6 mm of compression
- Wide grip range with adjustable screw
- Provides noise isolation
- Three cam alternatives available
- Shackle diameter is
  for 11 mm hole:
  min. 8.5 mm
  max. 10 mm
  for 8.5 mm hole:
  min. 6 mm
  max. 7.5 mm

V: 2

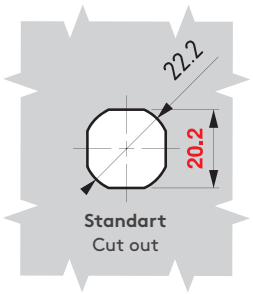

Standart
Cut out

Attention

V: 4

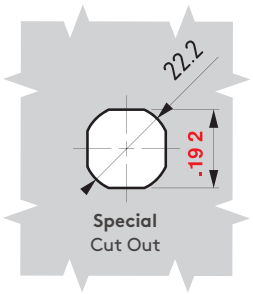

Special
Cut Out

MATERIAL

HOUSING:	Zamak DIN-EN 1774-ZnAl4Cu1
KNOB:	Zamak DIN-EN 1774-ZnAl4Cu1
CAM:	Steel
GASKET:	Rubber

FINISH
Chrome or black coated

MATERIAL	M	FINISH	F
Zamak	1	Chrome plated	1
		Black coated	2



CYLINDER	DD
No cylinder	00
Keyed alike (Stainless steel dust cap)	03
Keyed differ (Stainless steel dust cap)	32
CH751 (Stainless steel dust cap	07

Group Code	Version	Material	Finish	Cylinder	Cam	Padlock *
340	V	1	F	DD	CC	

*: add **"1"** for padlock application.

FIXING DEVICE

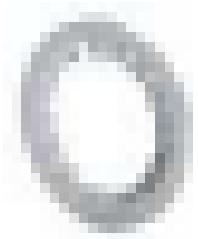

- Can be ordered separately
  ORDER CODE: 060 A3.

CAM LOCK

050



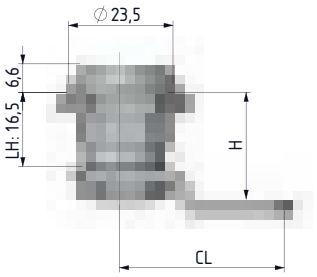

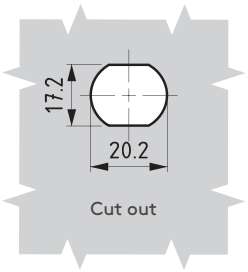

MATERIAL

HOUSING: Zamak DIN-EN 1774-ZnAl4Cu1

CAM: Steel

FINISH

Chrome plated

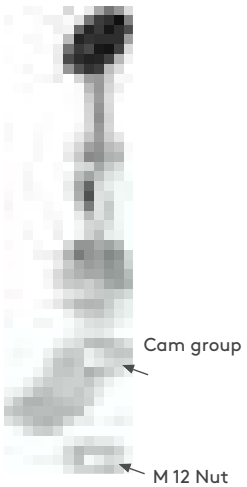



V: 1

KEY ROTATION ANGLE

180°

V: 2

KEY ROTATION ANGLE

90°

	CYLINDER	DD
	Keyed alike (Stainless steel dust cap)	03
	Keyed differ (Stainless steel dust cap)	32
	Euro key (5333)	05

Group Code	Version	Cylinder	Cam
050	V	DD	CC

For cams please check page: 175 (Cam-2)

tel | +90 212 721 44 44 fax | +90 212 721 44 45

050 CAM LOCK

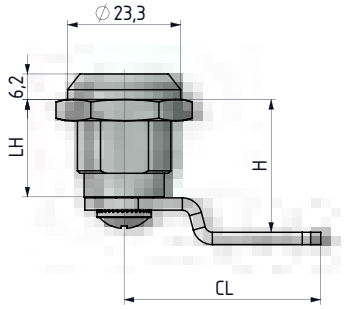

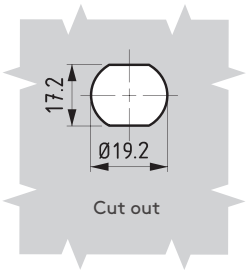

LH
20
25
30

KEY ROTATION ANGLE





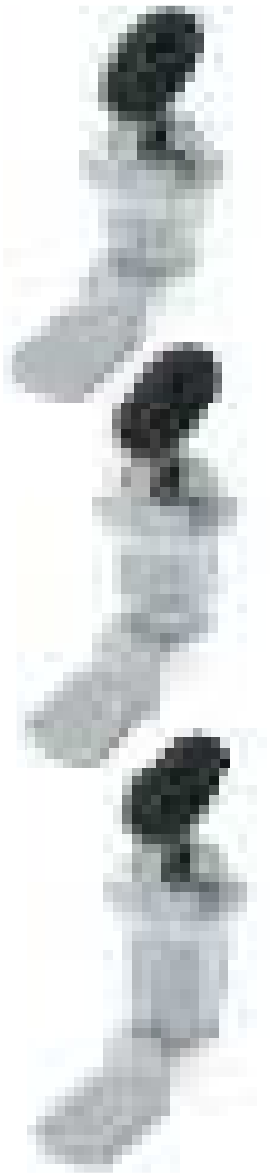

MATERIAL
HOUSING: Zamak DIN-EN 1774-ZnAl4Cu1
CAM: Steel

FINISH
Chrome plated

	CYLINDER	DD
	Keyed alike (Stainless steel dust cap)	03
	Keyed differ (Stainless steel dust cap)	32
	Euro key (5333)	05

Group Code	Housing Length	Cylinder	Cam
050	LH	DD	CC

For cams please check page: 175 (Cam-1)

HANDLE FOR LOCK — 050 A3

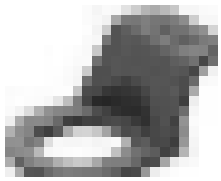

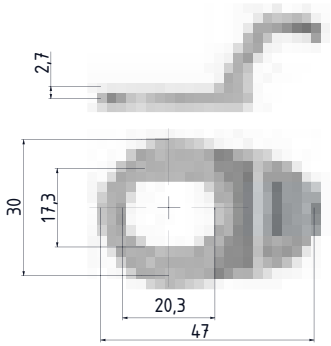



DUST CAP — 050 A4

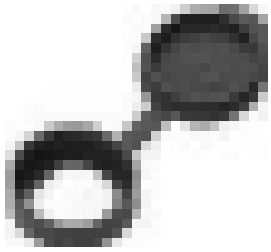

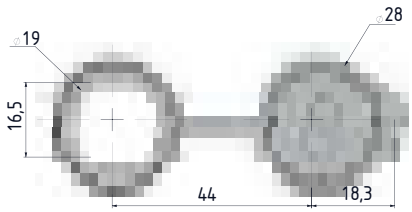

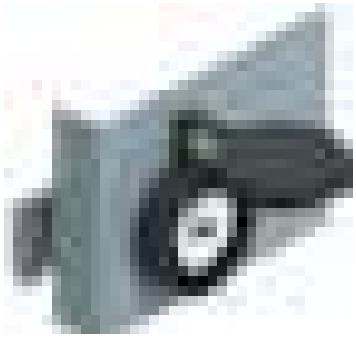

CAM LOCK FIXING PLATE FOR GLASS — 050 A1

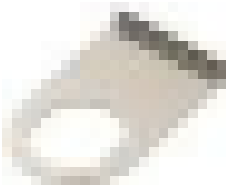

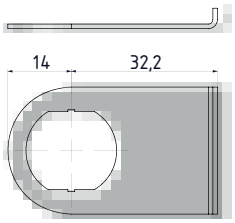



STRIKING PLATE — 030 A1

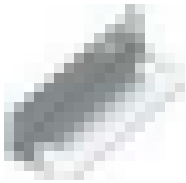

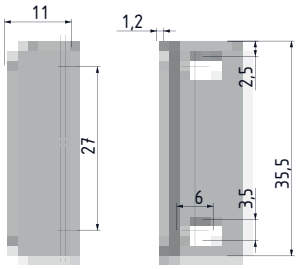

CAM LOCK FIXING PLATE FOR WOOD — 055 A1



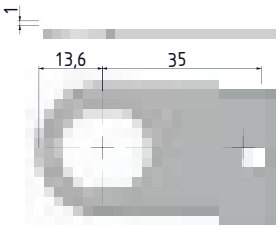



tel | +90 212 721 44 44 fax | +90 212 721 44 45

450 CAM LOCK SPRING LOADED

NEW

RoHS

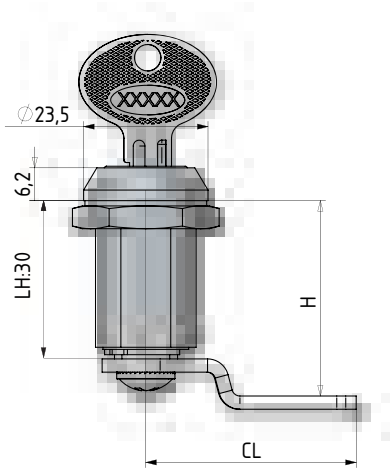

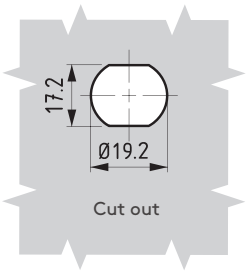



MATERIAL
HOUSING: Zamak DIN-EN 1774-ZnAl4Cu1
CAM: Steel

FINISH
Chrome plated

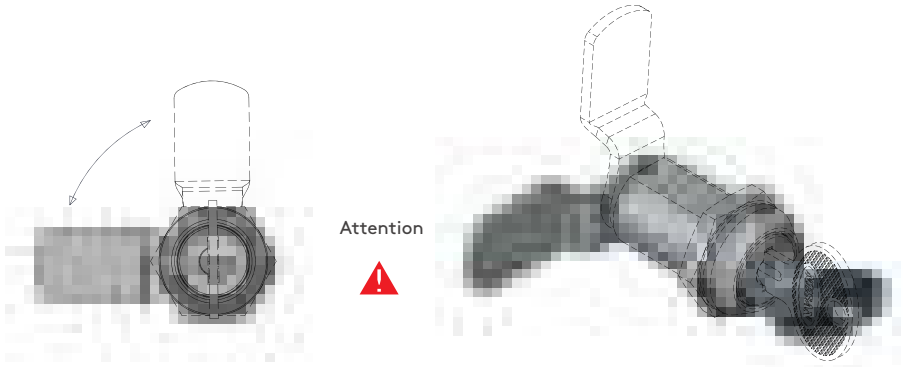

Cam throws back when the key is turned

KEY ROTATION ANGLE



	CYLINDER	DD
	Keyed alike (Stainless steel dust cap)	03
	Keyed differ (Stainless steel dust cap)	32
	Master system	04
	Euro key (5333)	05

Group Code	Cylinder	Cam
450	DD	CC

For cams please check page: 175 (Cam-1)

CAM LOCK

150



RoHS

IP 65

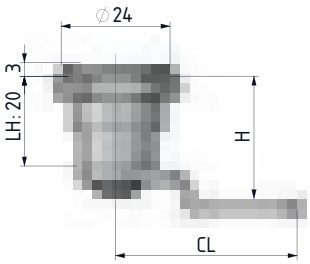

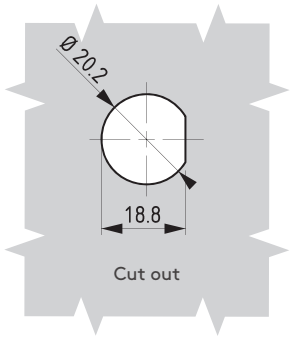

- Designed for polyester cabinets
- Very low profile head
- Please note special shape of mounting hole

MATERIAL

HOUSING: Zamak DIN-EN 1774-ZnAl4Cu1

CAM: Steel

FINISH

Chrome plated

KEY ROTATION ANGLE



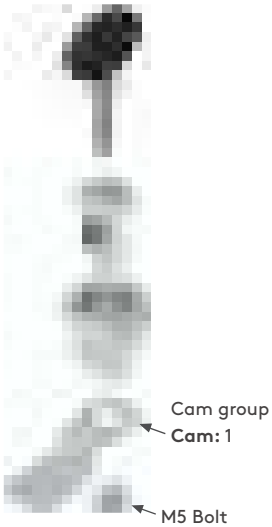



	CYLINDER	DD
	Keyed alike (Stainless steel dust cap)	03
	Keyed differ (Stainless steel dust cap)	32
	Euro key (5333)	05

Group Code	Housing Length	Cylinder	Cam
150	20	DD	CC

For cams please check page: 175 (Cam-1)

tel | +90 212 721 44 44 fax | +90 212 721 44 45

250 CAM LOCK

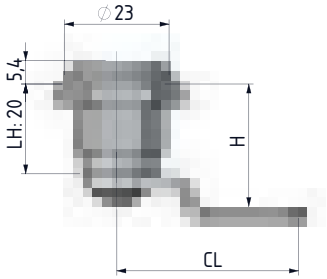

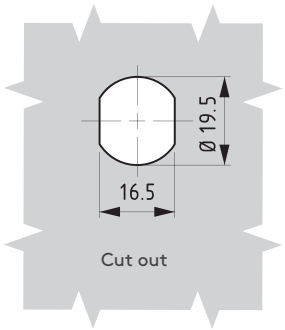



MATERIAL
HOUSING: Zamak DIN-EN 1774-ZnAl4Cu1
CAM: Steel

FINISH
Chrome plated





	CYLINDER	DD
	Keyed alike (Stainless steel dust cap)	03
	Keyed differ (Stainless steel dust cap)	32
	Euro key (5333)	05

Group Code	Housing Length	Cylinder	Cam
250	20	DD	CC

For cams please check page: 175 (Cam-1)

MINI CAM LOCK

057

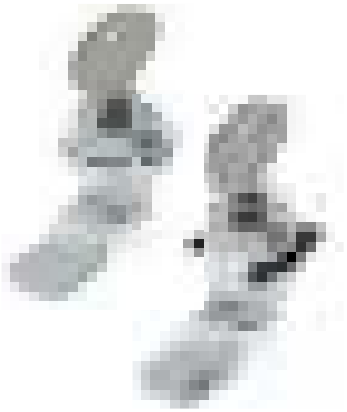

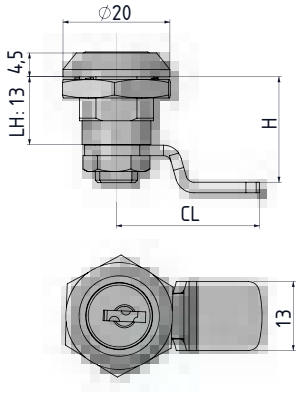

V: 1

Fixed by nut

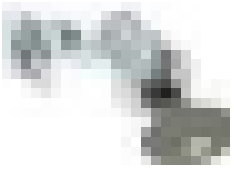

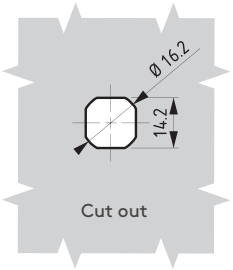

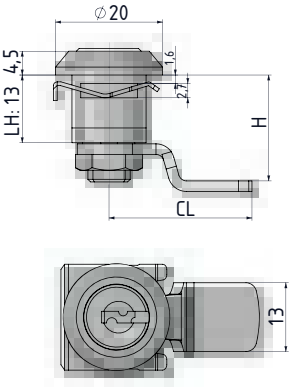

V: 3

Fixed by clips



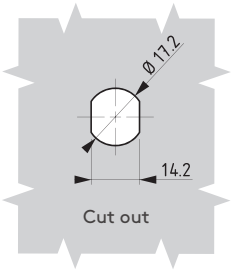

- Keyed differ has maximum 100 key combination
- Panel thickness in clips version It is between 0.8 mm-1.2 mm.

MATERIAL

HOUSING: Zamak DIN-EN 1774-ZnAl4Cu1

CAM: Steel

FINISH

Chrome

KEY ROTATION ANGLE





	CYLINDER	DD
	Keyed alike (Stainless steel dust cap)	03
	Keyed differ (Stainless steel dust cap)	32

Group Code	Version	Cylinder	Cam
057	V	DD	CC

For cams please check page: 175 (Cam-4)

tel | +90 212 721 44 44 fax | +90 212 721 44 45

157 MINI CAM LOCK

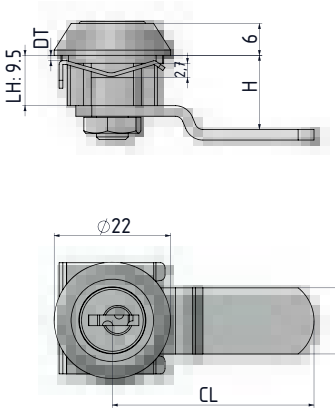



Fixed by clips

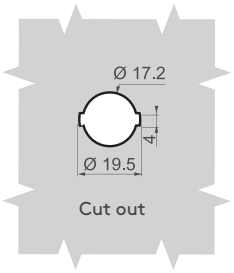

Cut out

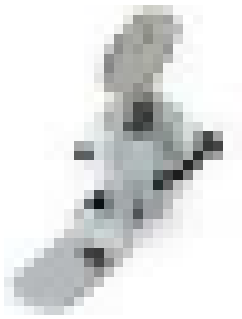

- Suitable for both steel and aluminium profile

MATERIAL

HOUSING: Zamak DIN-EN 1774-ZnAl4Cu1

CAM: Steel

STOCK CODE	CC	CH	CL	LH:9.5 H
30403487Y	27	0	16	9.5
31403040Y	28	1	33	10.5
31403032Y	23	1	38	10.5
30403469Y	24	5	38	14.5
*31403041Y	29	6	30	15.5

* Hook cam (CC: 29)

DOOR THICKNESS	VERSION
1.2 -1.5 mm	1
0.8 -1.2 mm	2



KEY ROTATION ANGLE



	CYLINDER	DD
	Keyed alike (Stainless steel dust cap)	03
	Keyed differ (Stainless steel dust cap)	32

Group Code	Version	Cylinder	Cam
157	V	DD	CC

MINI CAM LOCK

257

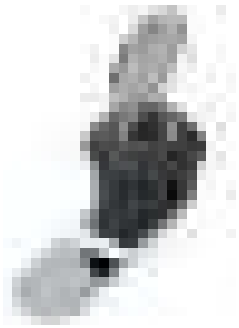

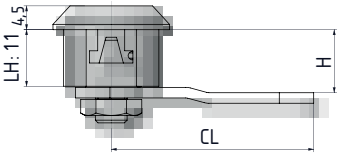

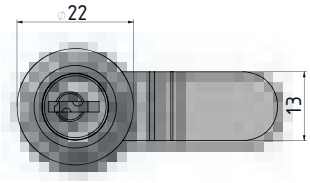

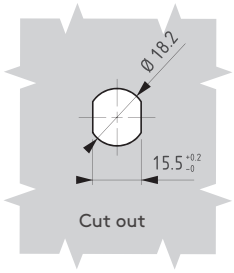

- Easy assembly with clips on housing
- Panel thickness is max 1.7 mm.

MATERIAL

HOUSING: Polyamide DIN-EN ISO 1043-1 PA6 GFR 30

CAM: Steel

FINISH

Chrome

KEY ROTATION ANGLE

45°

STOCK CODE	CC	CH	CL	LH:9.5 H	
30403487Y	27	0	16	11	
31403040Y	28	1	33	12	
31403032Y	23	1	38	12	
30403469Y	24	5	38	16	
31403041Y	29	6	30	17	Hook cam (CC: 29)

	CYLINDER	DD
	Keyed alike (Stainless steel dust cap)	03
	Keyed differ (Stainless steel dust cap)	32

Group Code	Cylinder	Cam
257	DD	CC

tel | +90 212 721 44 44 fax | +90 212 721 44 45

056 CAM LOCK



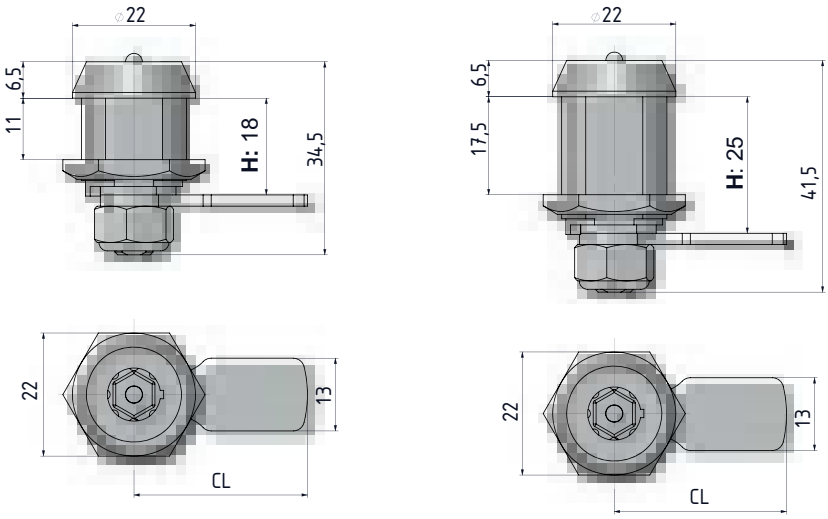

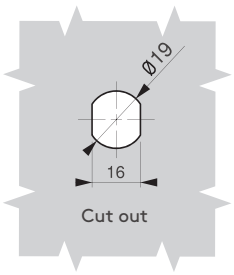

- High-security lock
- Unique key combination available
- Two different housing lengths (18 mm and 25 mm)
- For different cam alternatives contact Essentra

MATERIAL

HOUSING:	Brass
CAM:	Steel
NUT:	Brass

	CYLINDER	DD
	Keyed alike	01
	Keyed differ	02

Group Code	Grip	Cylinder
056	H	DD

For cams please check page: 175 (Cam-1)

FAST FIND INDEX


274

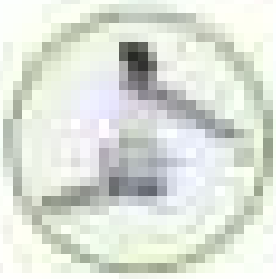
274


275

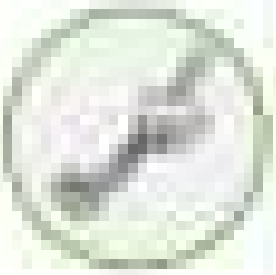
275

NEW

276

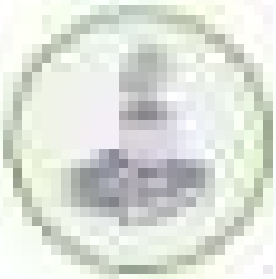
276


277


277

NEW

278

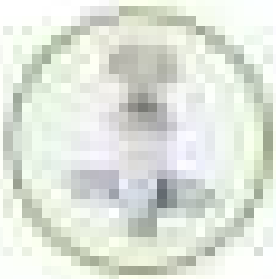
279

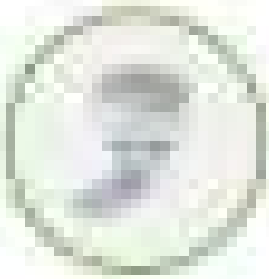
280

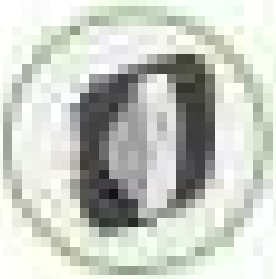
281


282

NEW

283

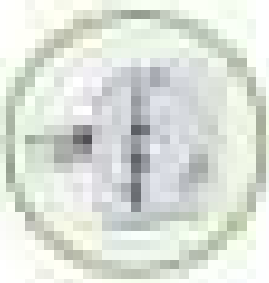
284

NEW

285



FURNITURE & STEEL CUPBOARD LOCKS

272-285

mesan
ESSENTRA COMPONENTS

e-mail | info@mesanlocks.com web | www.mesanlocks.com

CAM LOCK – T HANDLE 010



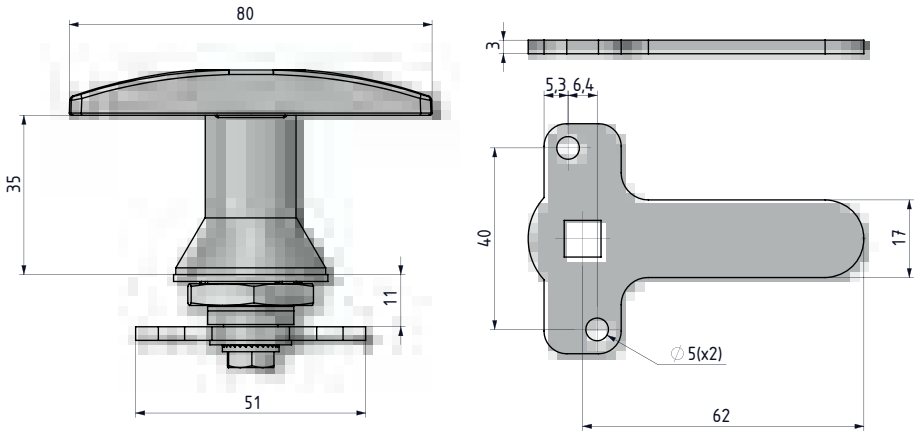

MATERIAL

HOUSING:	Zamak DIN-EN 1774-ZnAl4Cu1
HANDLE:	Zamak DIN-EN 1774-ZnAl4Cu1
CAM:	Steel

CAM LOCK – L HANDLE 011



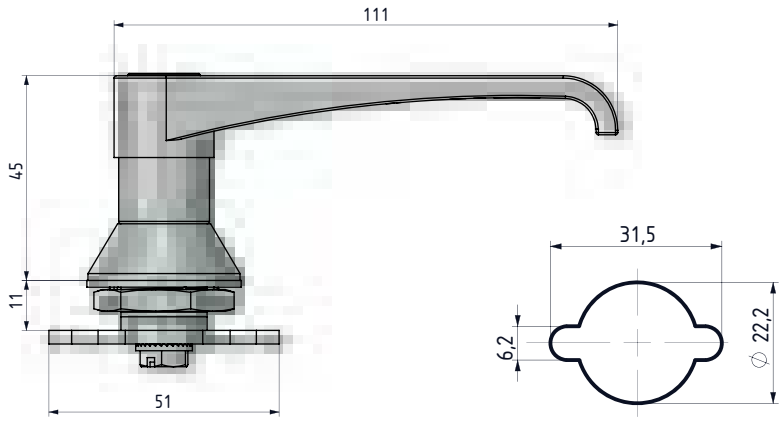

Cut Out

MATERIAL

HOUSING:	Zamak DIN-EN 1774-ZnAl4Cu1
HANDLE:	Zamak DIN-EN 1774-ZnAl4Cu1
CAM:	Steel

CYLINDER	SPECIFICATIONS	DD
	No cylinder	00
	Keyed alike	01
	Keyed differ	02
	Euro key (5333)	05
	CH751 (Stainless steel dust cap)	07

MATERIAL	M	FINISH	F
Zamak	1	Chrome plated	1
		Black coated	2

DOOR DIRECTION	
Right hand	001
Left hand	002

Group Code	Material	Finish	Cylinder	Door Direction
	1	F	DD	

tel | +90 212 721 44 44 fax | +90 212 721 44 45

021 GLASS-DOOR LOCK

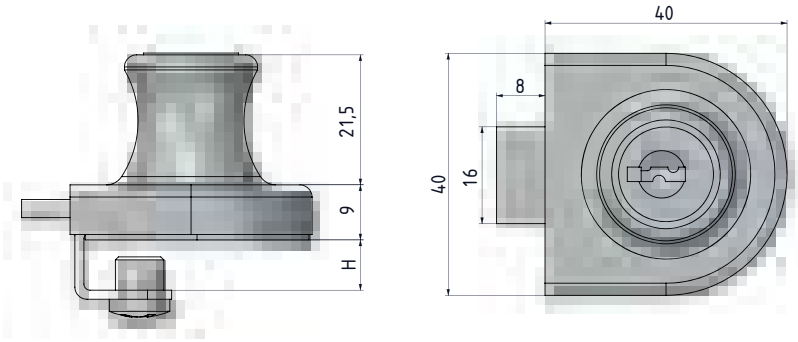

H: Glass Thickness
min : 4 mm
max: 7 mm





MATERIAL
BODY: Zamak DIN-EN 1774-ZnAl4Cu1

FINISH
Chrome plated

020 SLIDING-GLASS DOOR LOCK

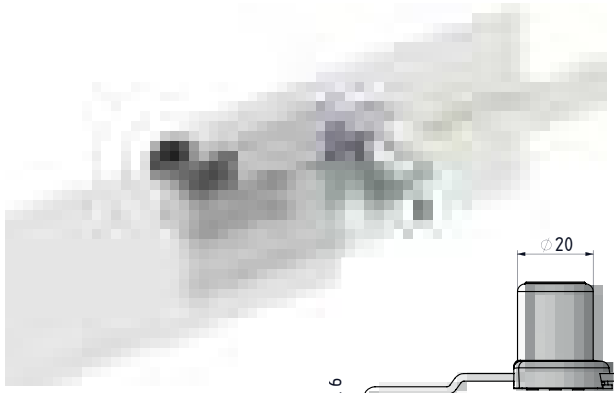

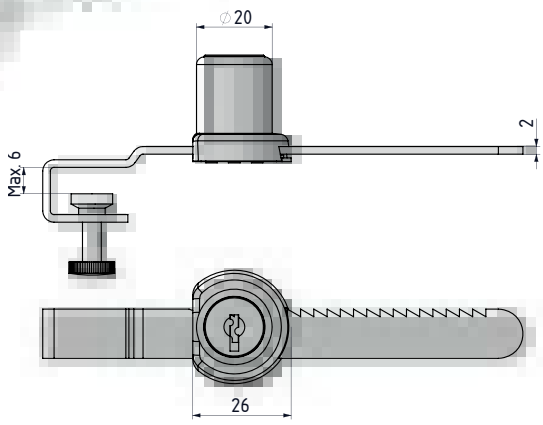



MATERIAL
BODY: Zamak DIN-EN 1774-ZnAl4Cu1
SLIDE: Stainless steel (AISI 304)

FINISH
Chrome plated

CYLINDER	SPECIFICATIONS	DD
	Keyed alike	01
	Keyed differ	02

Group Code	Cylinder
	DD

FURNITURE LOCK 132

NEW

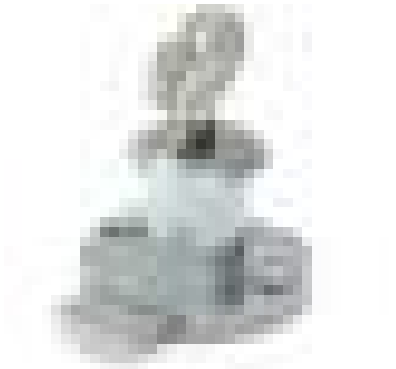

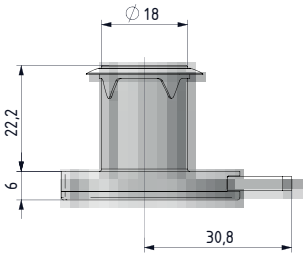

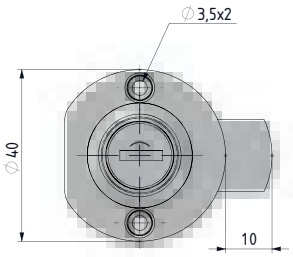

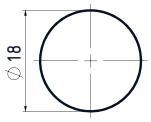

Cut Out

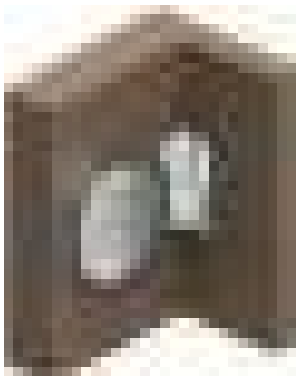

MATERIAL
BODY: Zamak DIN-EN 1774-ZnAl4Cu1
CAM: Steel

FINISH
Chrome plated

FURNITURE LOCK 032



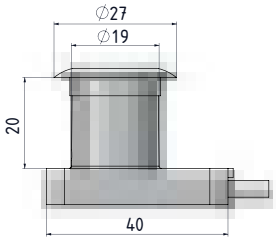

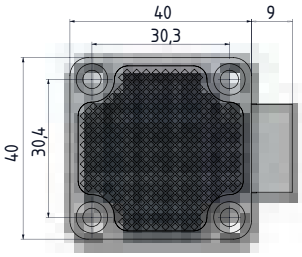

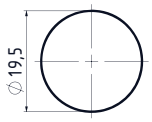

Cut Out



MATERIAL
BODY: Zamak DIN-EN 1774-ZnAl4Cu1
CAM: Steel

FINISH
Chrome plated

CYLINDER	SPECIFICATIONS	DD
	Keyed alike	01
	Keyed differ	02

Group Code	Cylinder
	DD

tel | +90 212 721 44 44 fax | +90 212 721 44 45

033 FURNITURE LOCK

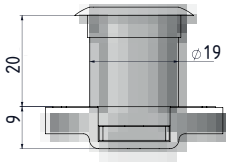

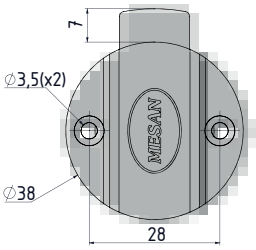



Cut Out

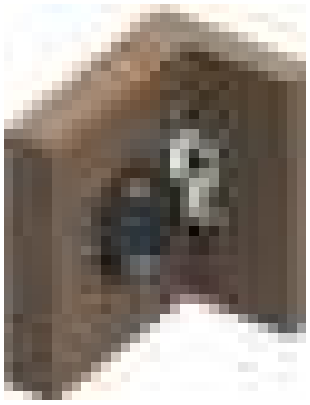

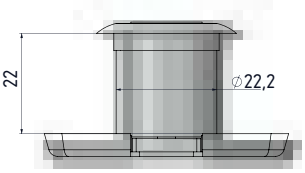

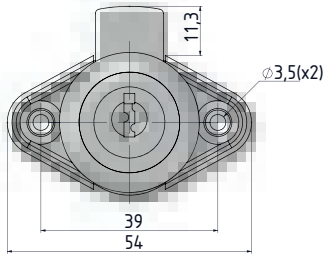

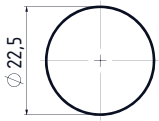

Cut Out

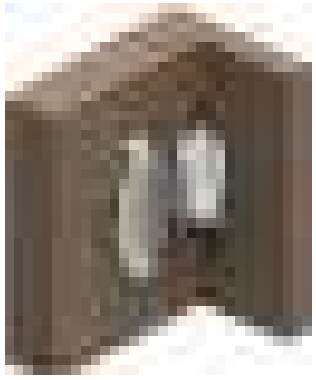

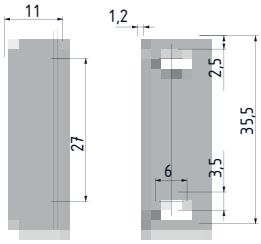

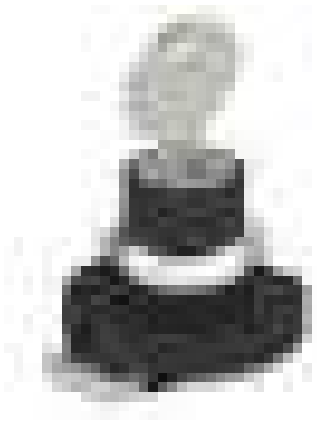

MATERIAL
BODY: Polyamide DIN-EN ISO 10431 Pa6 GFR 30
CAM: Steel

030 FURNITURE LOCK

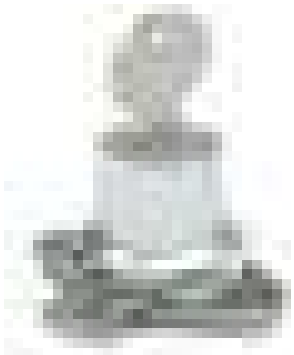

MATERIAL
BODY: Zamak DIN-EN 1774-ZnAl4Cu1
CAM: Steel

FINISH
Chrome plated

030 A1 STRIKING PLATE

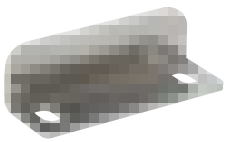

MATERIAL
BODY: Zamak DIN-EN 1774-ZnAl4Cu1

FINISH
Nickel plated

CYLINDER	SPECIFICATIONS	DD
	Keyed alike	01
	Keyed differ	02

Group Code	Cylinder
	DD

SLIDING-DOOR LOCK

159

NEW

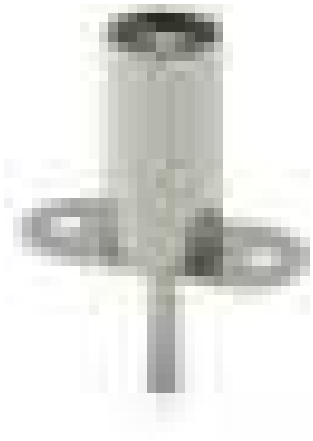

MATERIAL

BODY:	Stainless Steel
DRIVER:	Stainless Steel

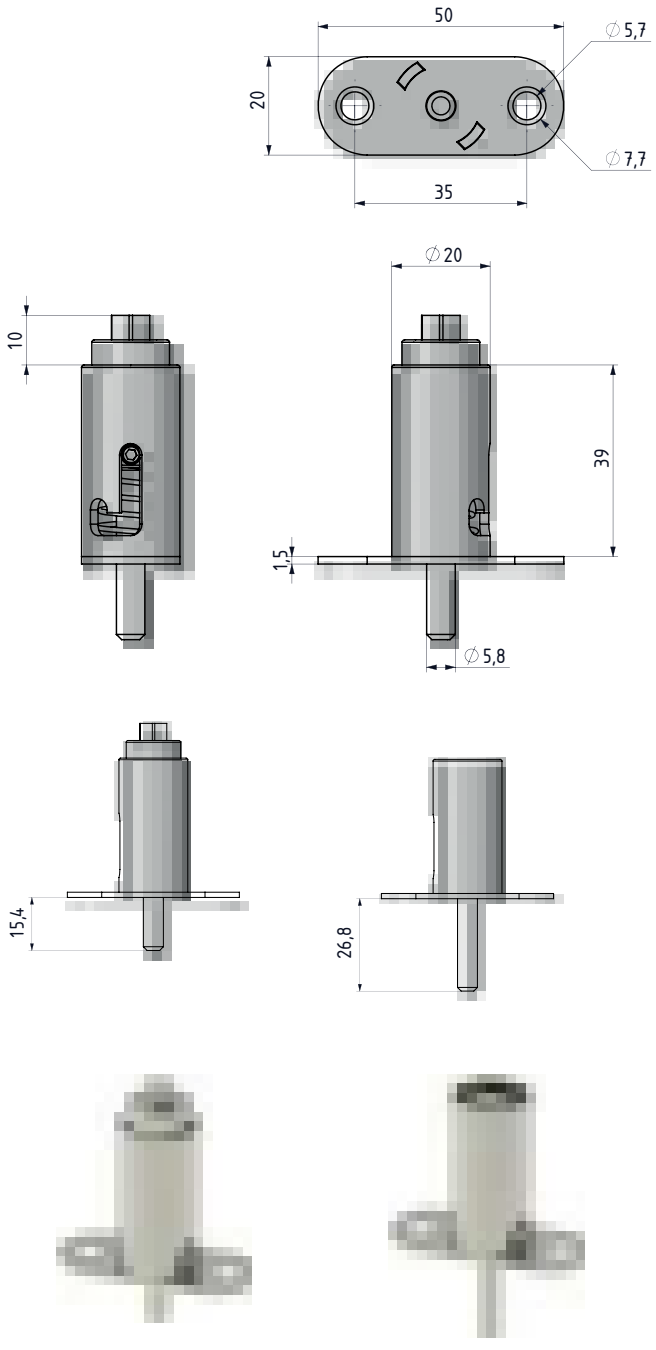

Unlocked position

Locked position

Group Code	Material	Finish
159	4	0

tel | +90 212 721 44 44 fax | +90 212 721 44 45

059 SLIDING-DOOR LOCK



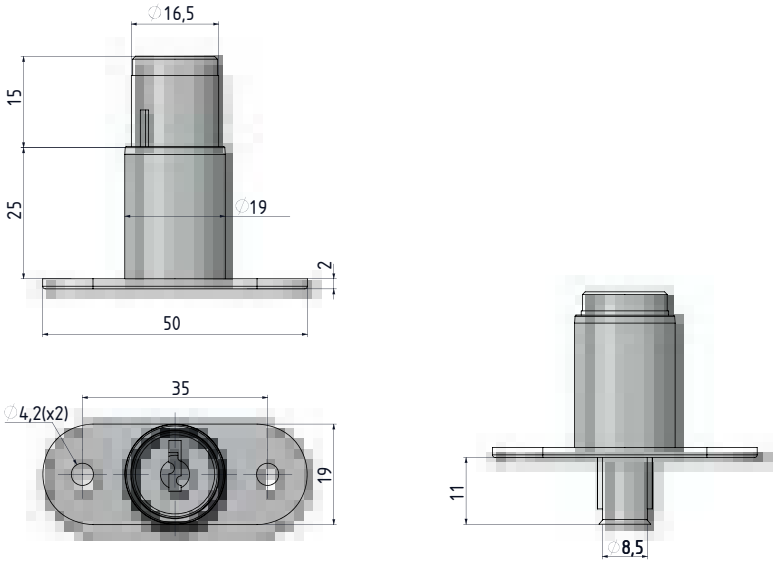

- Suitable for horizontal refrigerators
- Key alike and key differ available

MATERIAL

BODY: Zamak DIN-EN 1774-ZnAl4Cu1

CYLINDER: Zamak DIN-EN 1774-ZnAl4Cu1

FINISH

Chrome plated

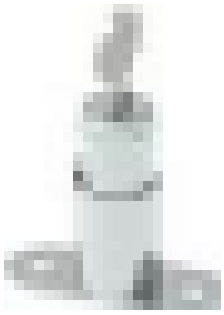

Unlocked position

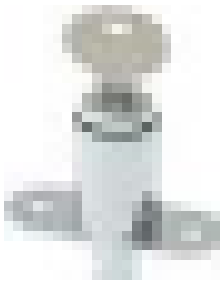

Locked position

CYLINDER	SPECIFICATIONS	DD
	Keyed alike	01
	Keyed differ	02

Group Code	Cylinder
059	DD

COMBINATION LOCK 4150



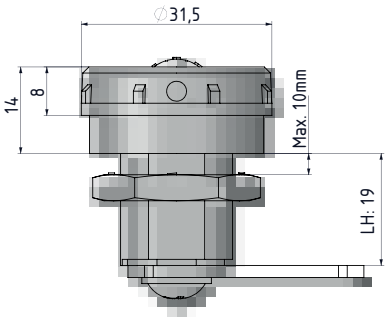

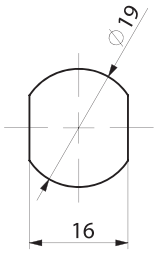

Cut Out

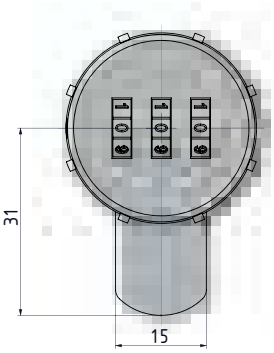

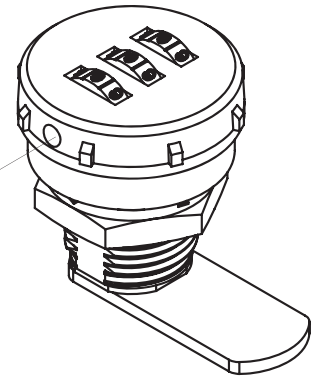

Button for changing the code

MATERIAL
BODY: Zamak DIN-EN 1774-ZnAl4Cu1
CAM: Steel

FINISH
Chrome plated



tel | +90 212 721 44 44 fax | +90 212 721 44 45

035 STEEL CUPBOARD LOCK

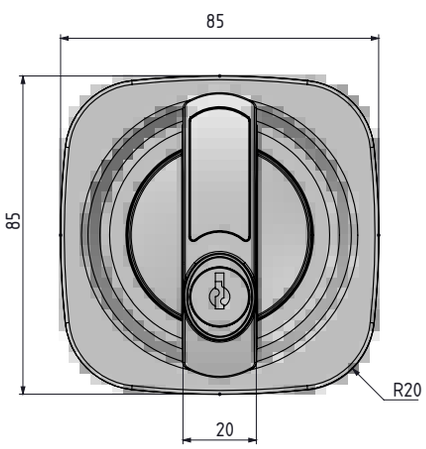

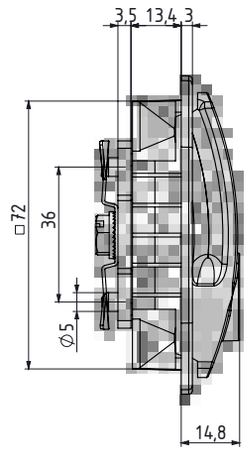

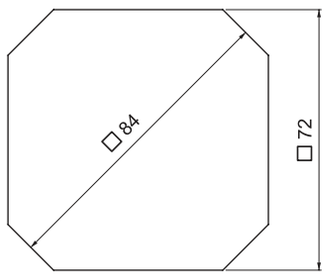

Cut Out

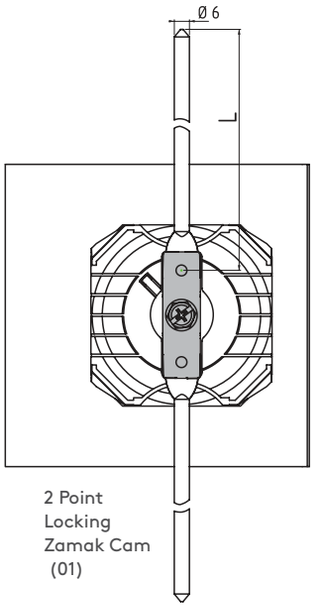

2 Point Locking Zamak Cam (01)

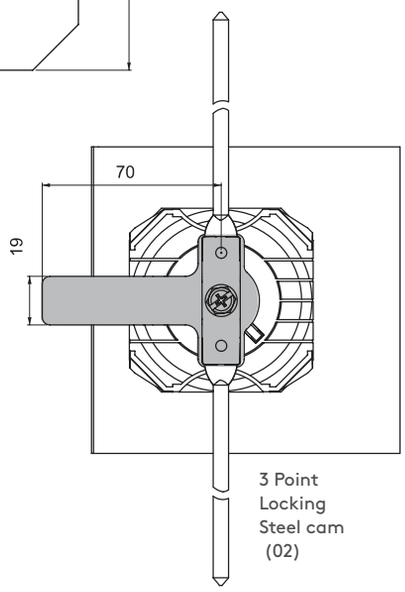

3 Point Locking Steel cam (02)



- Suitable for steel cupboards
- Easy rod assembly with special fixing plate
- Easy assembly with clips on body
- Two- or three-point locking optional

MATERIAL

BODY: Polyamide DIN-EN ISO 1043-1 Pa6 GFR 30

KNOB: Zamak DIN-EN 1774-ZnAl4Cu1w

01 Zamak cam



02 Steel cam

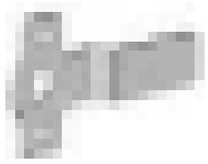

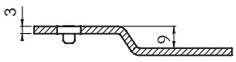

CYLINDER	SPECIFICATIONS	DD
	Keyed alike	01
	Keyed differ	02
	Master system	04

MATERIAL	M
Zamak	1
Plastic	2

FINISH	F
Chrome	1
Black coated	2
Gray coated	3
No finish	0

Group Code	Body		Handle	Cylinder	Cam
035	2	0	1	F	DD	CC

STEEL CUPBOARD LOCK 058



- Primarily for central locking applications
- Clip fixing

MATERIAL

BODY: Zamak DIN-EN 1774-ZnAl4Cu1

CYLINDER: Zamak DIN-EN 1774-ZnAl4C1

FINISH

Chrome plated

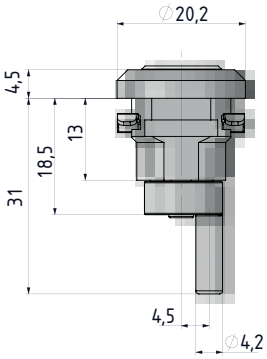

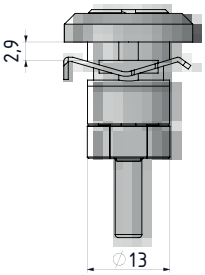

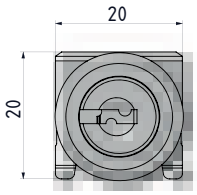

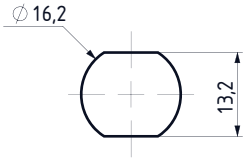

Cut Out

CYLINDER	SPECIFICATIONS	DD
	Keyed alike	01
	Keyed differ	02

Group Code	Cylinder
058	DD

tel | +90 212 721 44 44 fax | +90 212 721 44 45

158 STEEL CUPBOARD LOCK

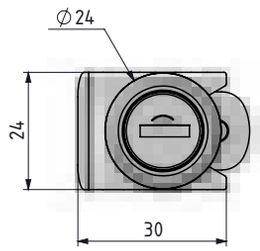

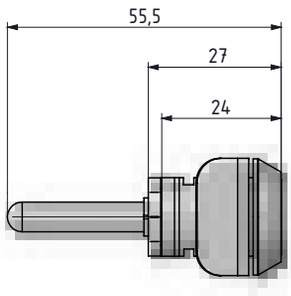

NEW

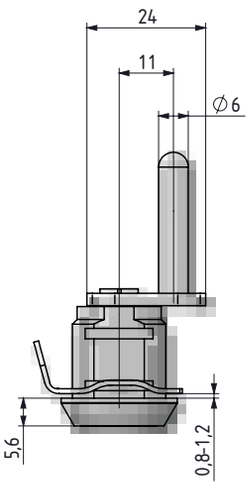



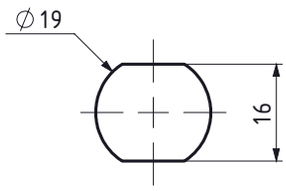

Cut Out

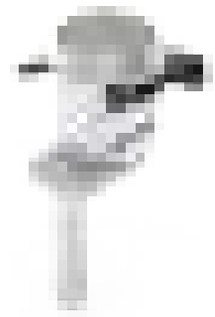

- Primarily for central locking applications
- Clip fixing

MATERIAL

BODY: Zamak DIN-EN 1774-ZnAl4Cu1

CYLINDER: Zamak DIN-EN 1774-ZnAl4Cu1

FINISH

Chrome plated

CYLINDER	SPECIFICATIONS	DD
	Keyed alike (Stainless steel dust cap)	03
	Keyed differ (Stainless steel dust cap)	32

Group Code	Cylinder
158	DD

FIRE HOSE CABINET LOCK — 013



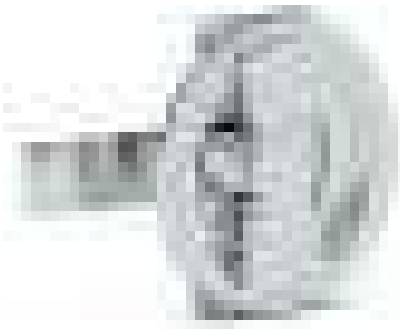

- Designed for fire-hose cabinets
- Special fixing-plate supplied for easy fixing
- Flush design provides flat surface on cabinet
- Customized colours available

MATERIAL

BODY:	Zamak DIN-EN 1774-ZnAl4Cu1
KNOB:	Zamak DIN-EN 1774-ZnAl4Cu1
CAM:	Steel
FIXING PLATE:	Steel

For cams please check pages: 172 - 173

V:1

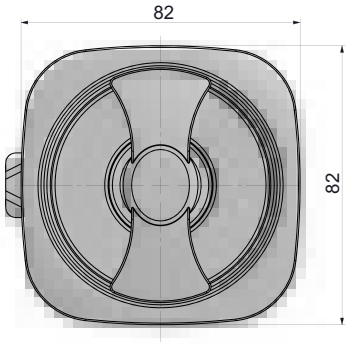

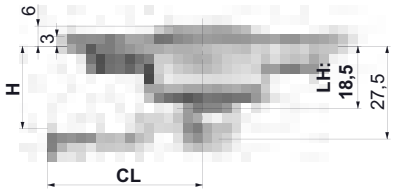

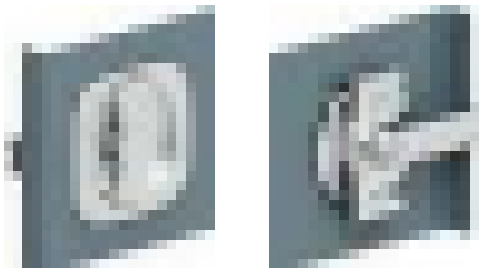

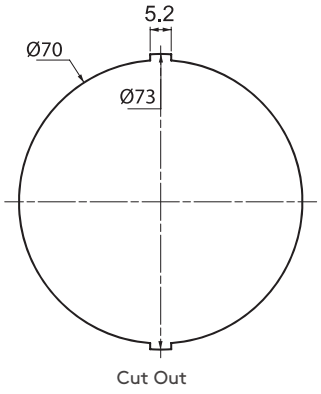

Cut Out

V:2

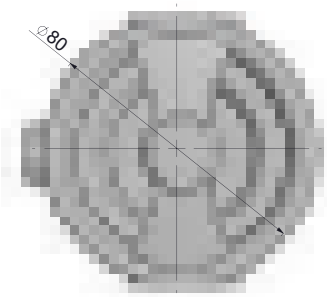

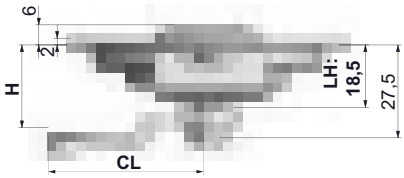

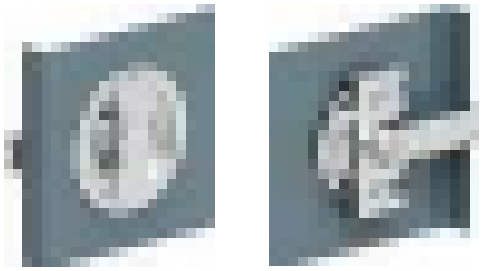

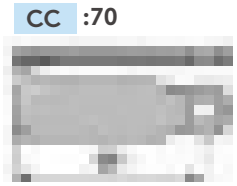

CC :70

MATERIAL	M
Zamak	1

FINISH	F
Chrome	1
Black coated	2

Group Code	Version	Body		Handle		Cam
013	V	1	F	1	F	CC

tel | +90 212 721 44 44 fax | +90 212 721 44 45

113 FIRE-HOSE CABINET LOCK

V:1

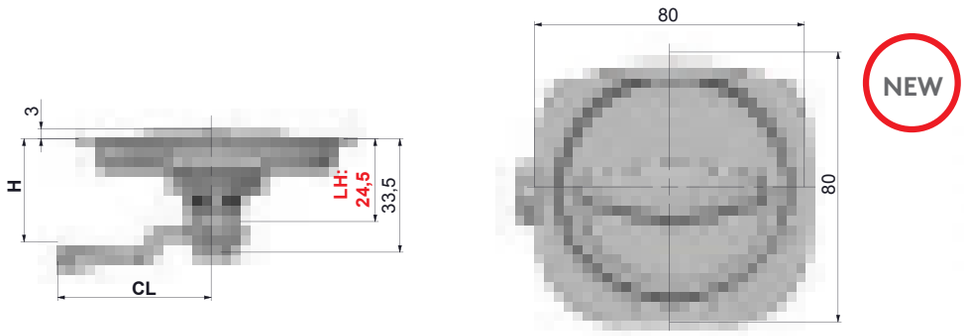

NEW

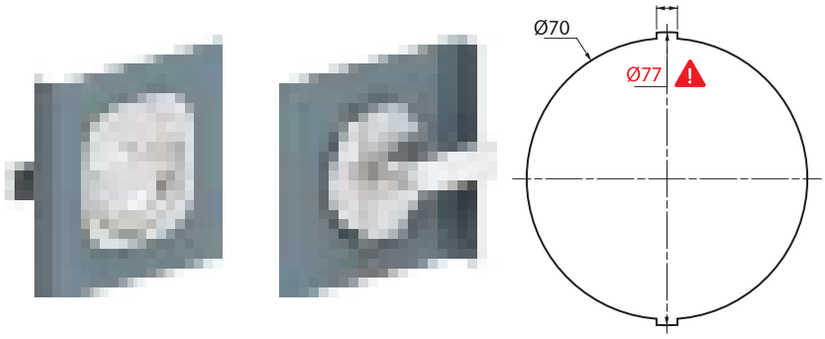

Cut Out

V:2

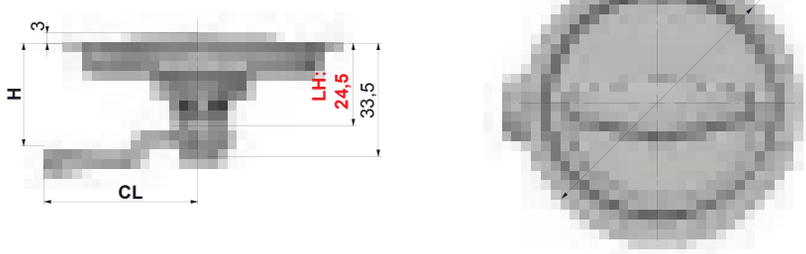



CC :70



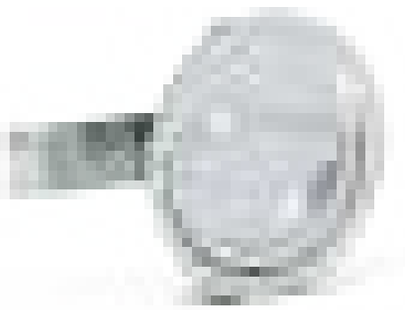

- Designed for fire-hose cabinet
- Special fixing plate supplied for easy fixing
- Flush design provides flat surface on cabinet
- Customized colours available

MATERIAL

BODY:	Steel
KNOB:	Steel
CAM:	Steel
FIXING PLATE:	Steel

MATERIAL	M
Steel	6

FINISH	F
Chrome	1
Black coated	2

Group Code	Version	Body		Handle		Cam
113	V	6	F	6	F	CC

For cams please check pages: 172 - 173

FAST FIND INDEX


288


288

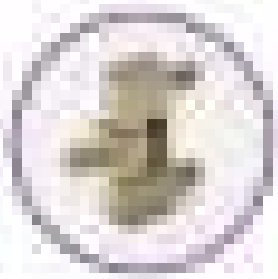
288


289


289


289


290


291


292

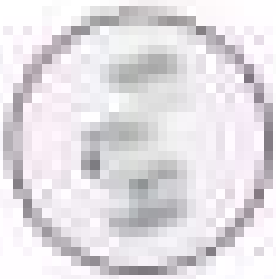
293

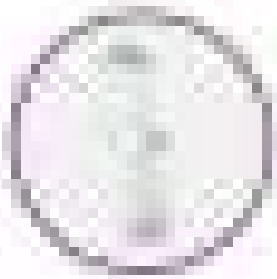
294

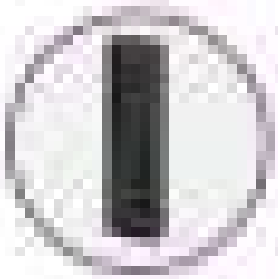
295


296

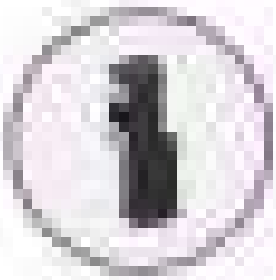
297


298

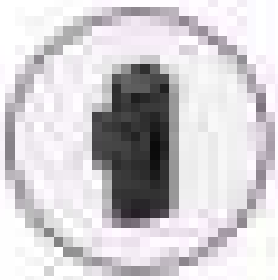
299



SIDE HINGES

286-299

mesan
ESSENTRA COMPONENTS

e-mail | info@mesanlocks.com web | www.mesanlocks.com

SIDE HINGES

SIDE HINGE (10 mm)

090



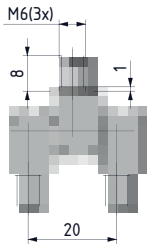

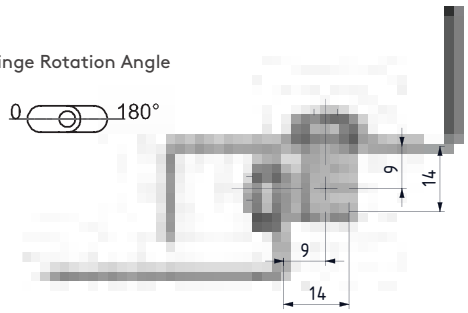

- **Stainless steel version: Page 512**
- Side-mounted hinge
- Hinge supplied in a unassembled state. For different dimensions contact Essentra

Group Code	Material	Finish
090	3	F

MATERIAL	M	FINISH	F
Brass	3	No finish	0
		Nickel plated	4

SIDE HINGE (12 mm)

091

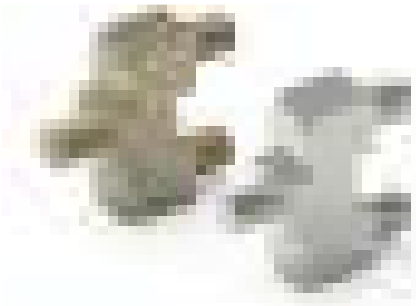

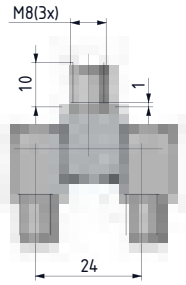

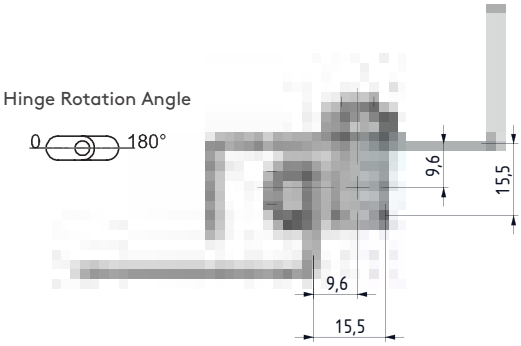

- Side-mounted hinge
- Hinge supplied in a unassembled state. For different dimensions contact Essentra Components

Group Code	Material	Finish
091	3	F

MATERIAL	M	FINISH	F
Brass	3	No finish	0
		Nickel plated	4

SIDE HINGE (12 mm)

092

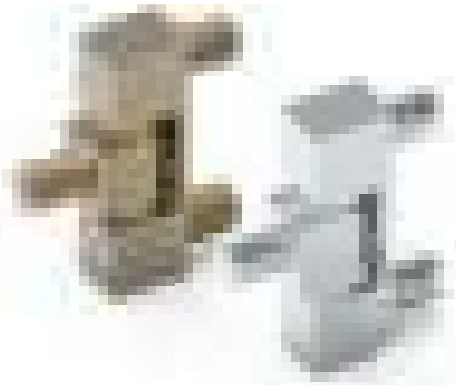

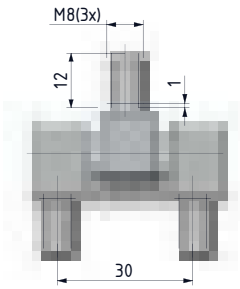

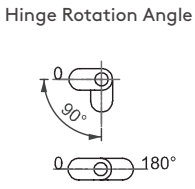

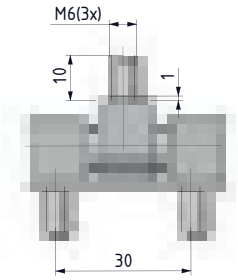

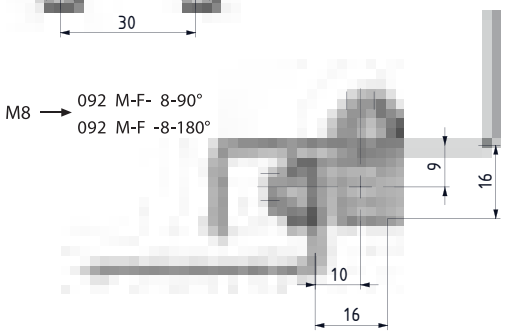

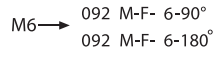

- **Stainless steel version: Page 512**
- Side-mounted hinge
- Brass 12 mm parts and bearings
- Parts are assembled by fixing plate. For different dimensions contact Essentra Components
- 90° and 180° angle versions are available

Group Code	Material	Finish
092	3	F

MATERIAL	M	FINISH	F
Brass	3	No finish	0
		Chrome plated	1

tel | +90 212 721 44 44 fax | +90 212 721 44 45

192 SIDE HINGE (12 mm)

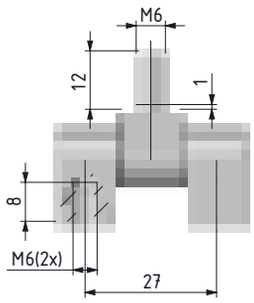

Hinge Rotation Angle

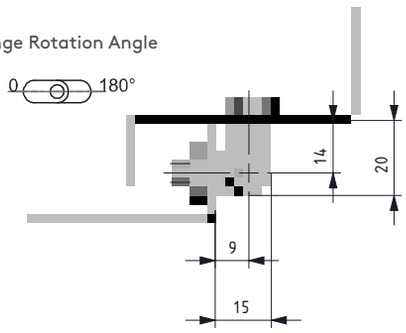

RoHS

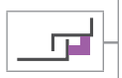





Group Code	Material	Finish
192	3	F

MATERIAL	M	FINISH	F
Brass	3	Chrome plated	1

- **Stainless steel version: Page 513**
- Side-mounted hinge
- Brass 12 mm parts and bearings
- Parts tightly fitted

093 SIDE HINGE (16 mm)

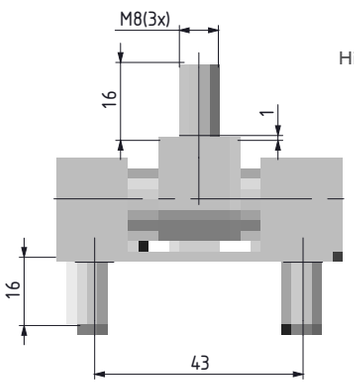

Hinge Rotation Angle

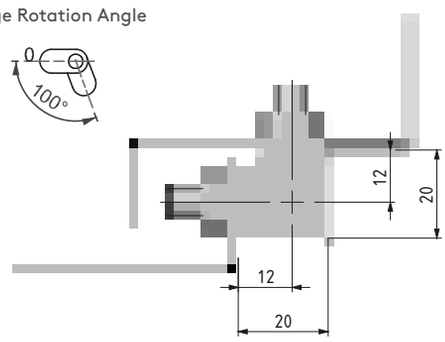

RoHS



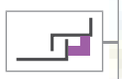



Group Code	Material	Finish
093	3	F

MATERIAL	M	FINISH	F
Brass	3	No finish	0
		Chrome plated	1

- Side-mounted hinge
- Brass 16 mm parts and bearings
- Parts assembled by fixing plate

193 SIDE HINGE (16 mm)

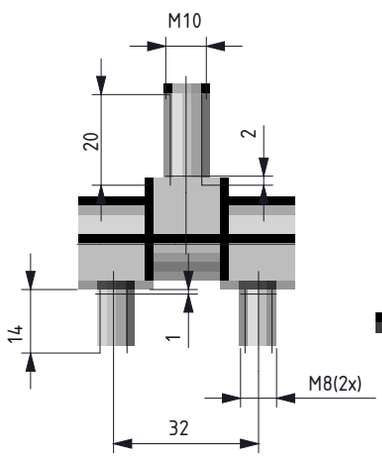

Hinge Rotation Angle

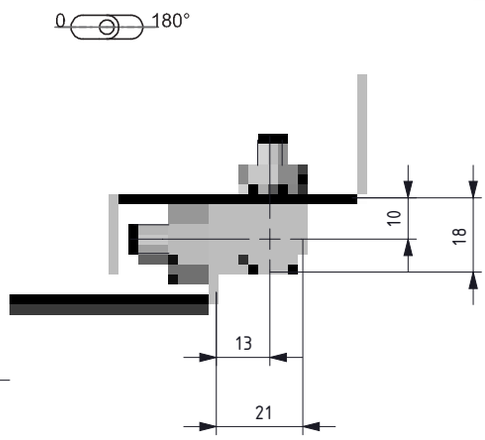

RoHS



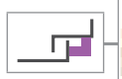

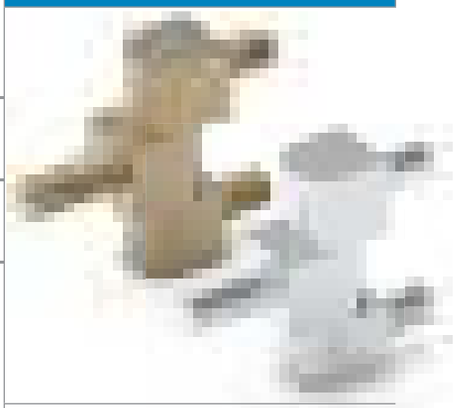

Group Code	Material	Finish
193	3	F

MATERIAL	M	FINISH	F
Brass	3	No finish	0
		Chrome plated	1

- **Stainless steel version: Page 513**
- Side-mounted hinge
- Brass 16 mm parts
- Parts tightly fitted

SIDE HINGE 793



- For medium voltage and heavy door panels
- Hinge parts produced from steel

MATERIAL
Steel

FINISH
Zinc plated

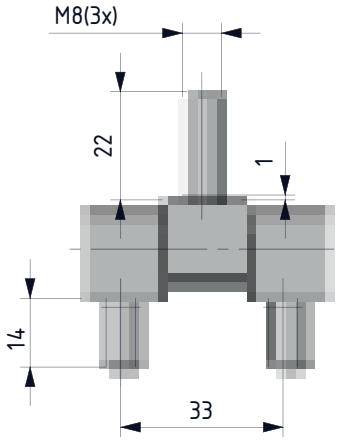

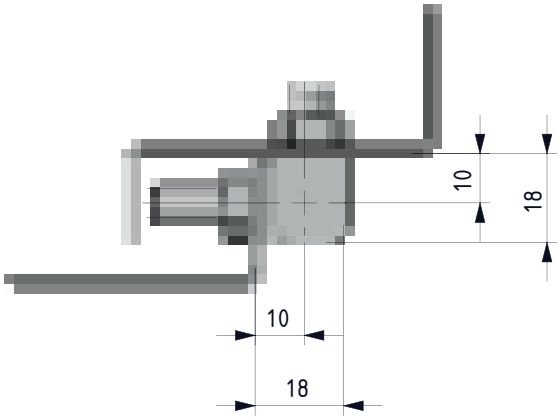



Note: Nuts and washers are not supplied.

Hinge Rotation Angle

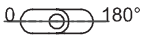

MATERIAL	M	FINISH	F
Steel	6	Zinc plated	3

Group Code	Material	Finish
793	6	3

tel | +90 212 721 44 44 fax | +90 212 721 44 45

893 SIDE HINGE

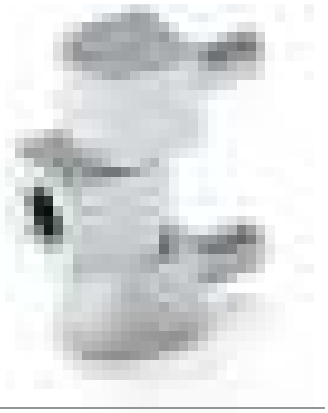

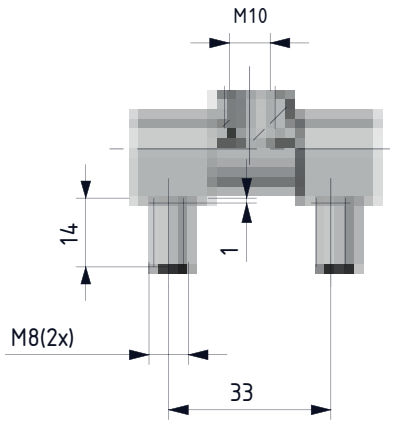

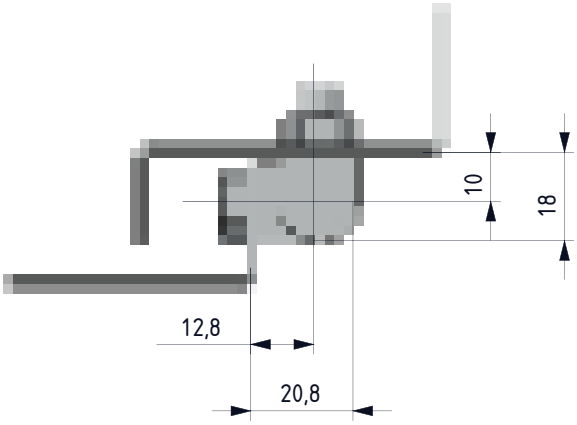

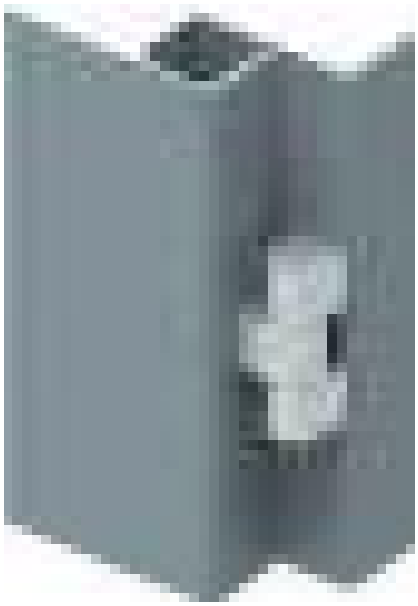

- For medium voltage and heavy door panels
- Assembled using special screws (supplied)
- Hinge supplied in a unassembled state

MATERIAL
C45 Steel, hardened

FINISH
Zinc plated

Note: Nuts and washers are not supplied.

MATERIAL	M	FINISH	F
Steel	6	Zinc plated	3

Group Code	Material	Finish
893	6	3

Hinge Rotation Angle

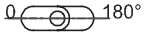

SIDE HINGE (10 mm) 191

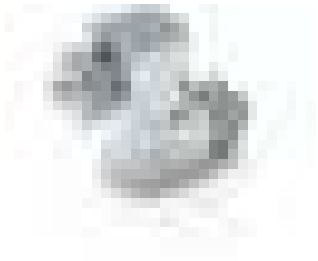

- Side-mounted hinge
- Steel 12 mm parts

MATERIAL
Steel

FINISH
Zinc plated

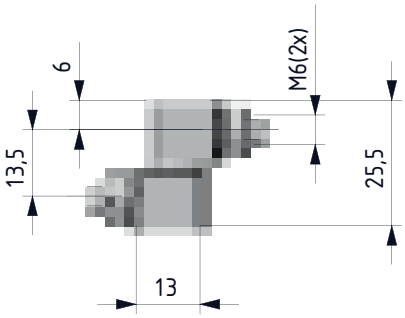

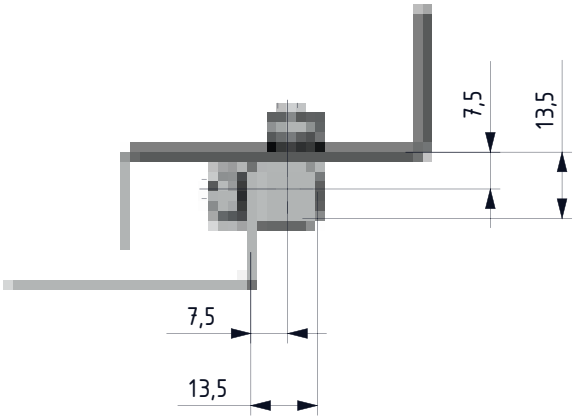

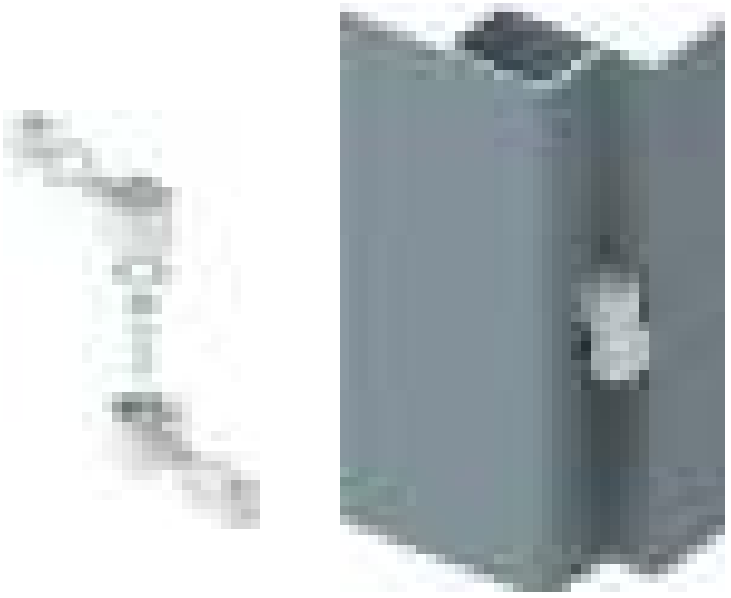

Hinge Rotation Angle



Note: Nuts and washers are supplied.

MATERIAL	M	FINISH	F
Steel	6	Zinc plated	3

Group Code	Material	Finish
191	6	3

tel | +90 212 721 44 44 fax | +90 212 721 44 45

1093 SIDE HINGE

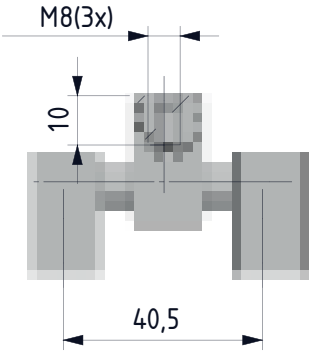

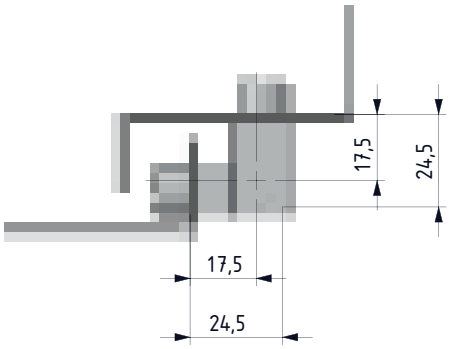



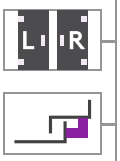



- Side-mounted hinge
- Pin Lenght can be modified
- For different lenght contact Essentra Components

MATERIAL
BODY: Brass
PIN: Steel

FINISH
Chrome Plated

MATERIAL	M	FINISH	F
Brass	3	Chrome plated	1

Group Code	Material	Finish
1093	3	1

Hinge Rotation Angle

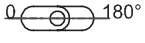

SIDE HINGES

SIDE HINGE 993

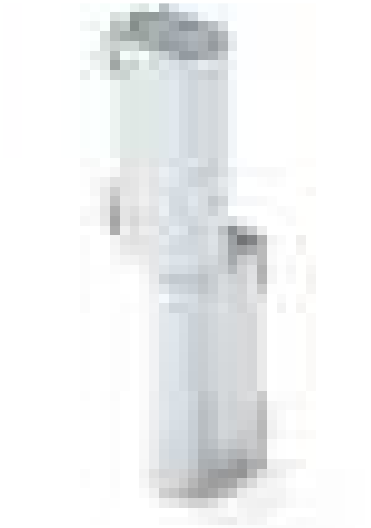

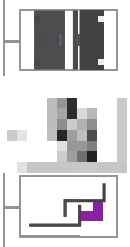

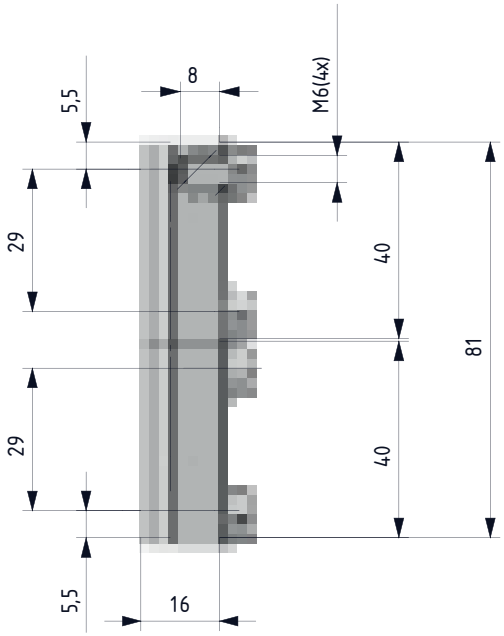

- Side-mounted hinge
- Brass 12 mm parts

MATERIAL
Brass

FINISH
Chrome plated

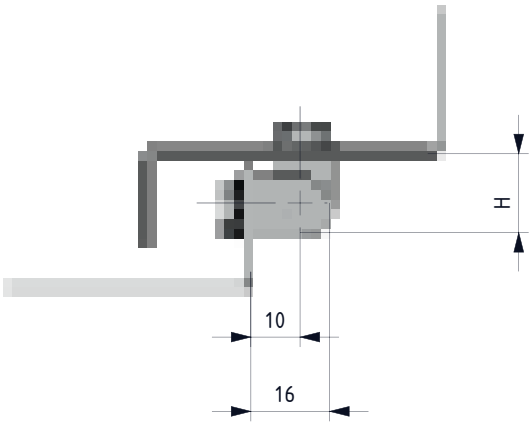

H
16
19
21

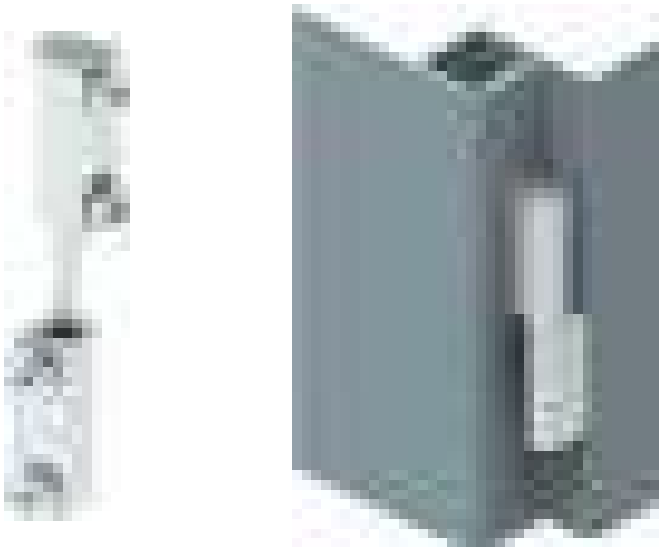

Note: Bolts are supplied

Hinge Rotation Angle



MATERIAL	M	FINISH	F
Brass	3	Chrome plated	1

Group Code	Material	Finish	Height
993	3	1	H

tel | +90 212 721 44 44 fax | +90 212 721 44 45

1193 SIDE HINGE

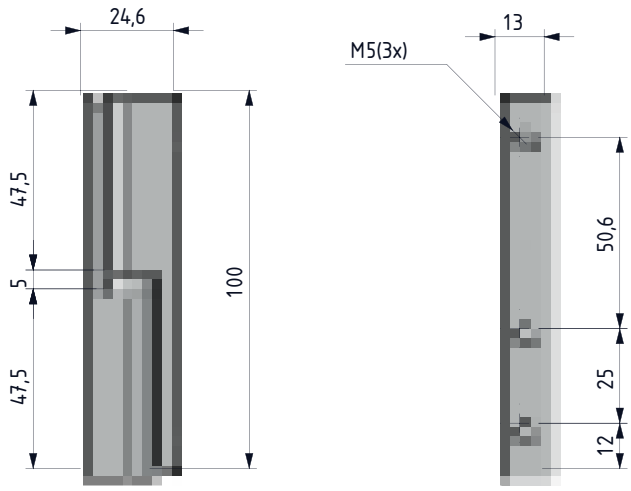

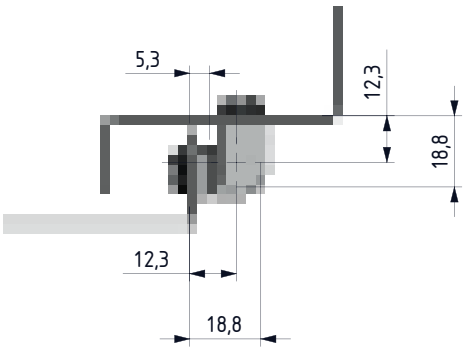

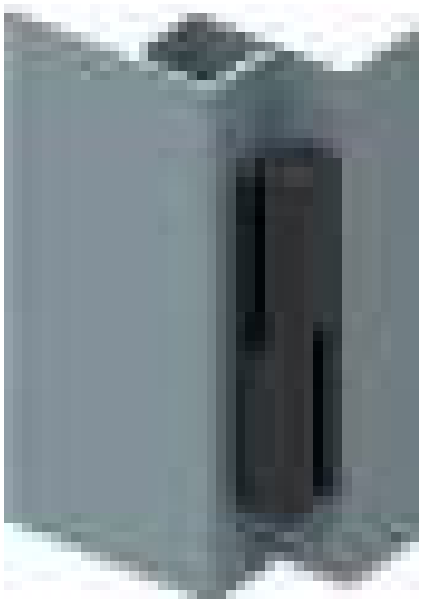

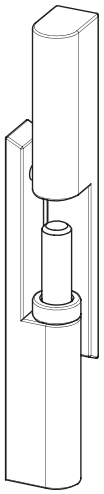



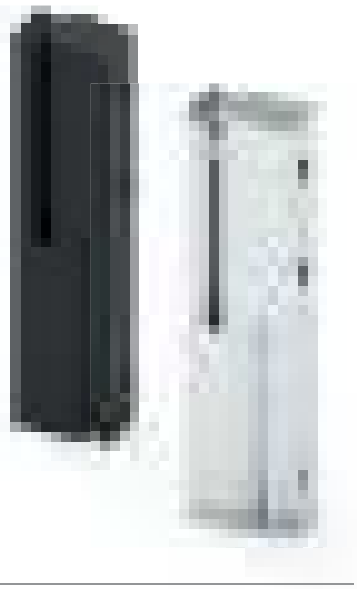

MATERIAL
BODY: Steel
PIN: Stainless Steel

FINISH
Chrome or black coated

Note: Bolts are not supplied

MATERIAL	M	FINISH	F
Steel	6	No finish	0
		Chrome plated	1
		Black coated	2

Group Code	Material	Finish
1193	6	F

Hinge Rotation Angle

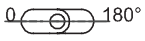

SIDE HINGES

SIDE HINGE 393

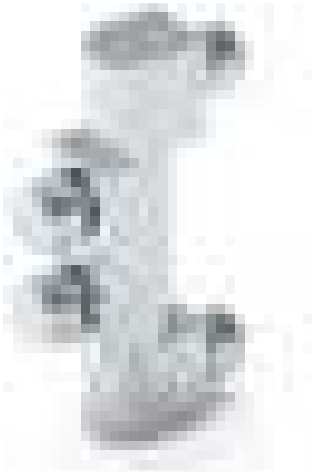

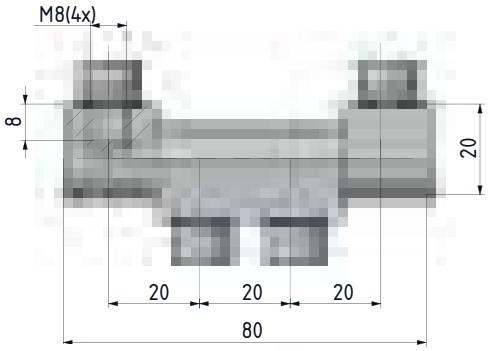

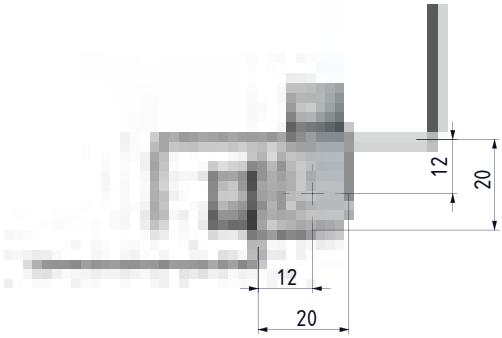

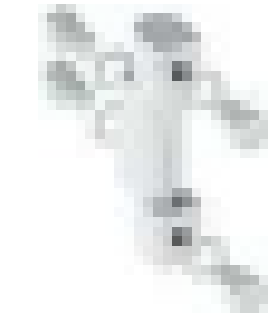

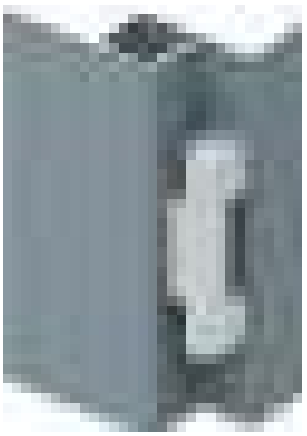

- For medium voltage and heavy door panels
- Chrome-plated brass
- Assembled using special screws (supplied)
- Parts supplied separately

MATERIAL
Brass: DIN 17672 CuZn39Pb3

SIDE HINGE 293



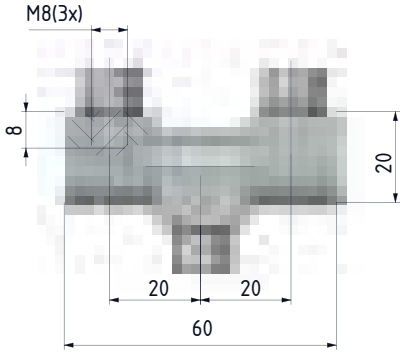

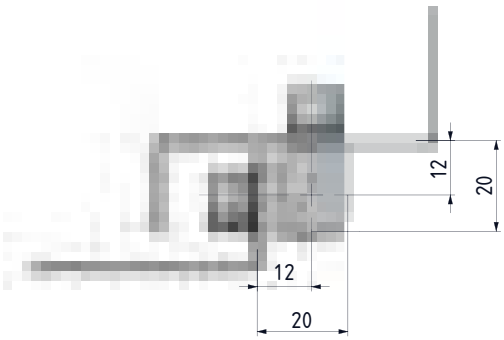

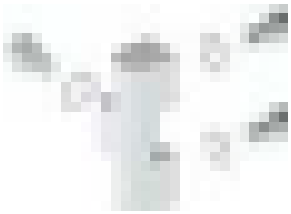

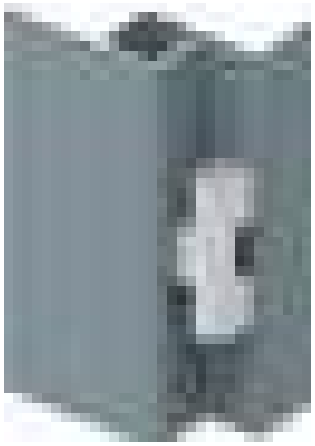

- For medium voltage and heavy door panels
- Chrome-plated brass
- Assembled using special screws (supplied)
- Parts supplied separately

MATERIAL
Brass: DIN 17672 CuZn39Pb3

Hinge Rotation Angle



MATERIAL	M	FINISH	F
Brass	3	Chrome plated	1

Group Code	Material	Finish
	3	F

tel | +90 212 721 44 44 fax | +90 212 721 44 45

493 SIDE HINGE

V: 1

Fixed zamak pin

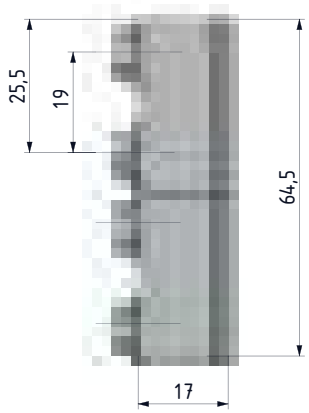

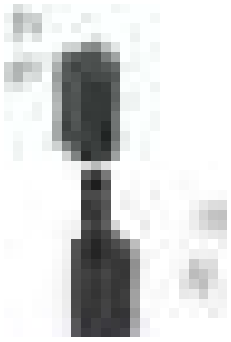

V: 2

Stainless steel pin

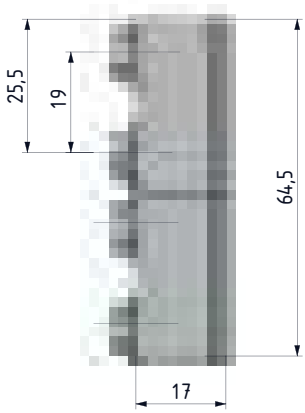

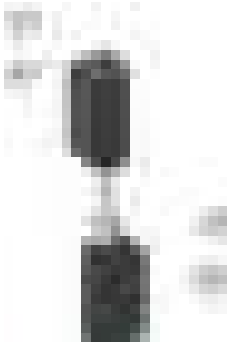

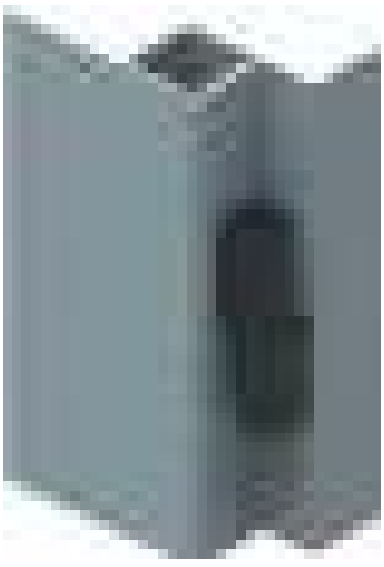

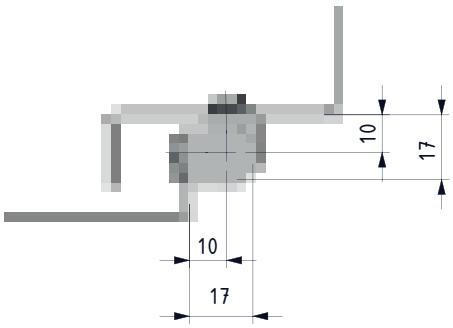

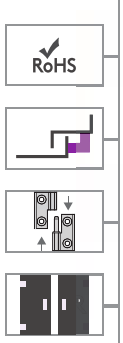



- Lift-off hinge
- Suitable for left- and right-hand applications
- Maximum hinge rotation 180°
- For heavy doors, version 2 is recommended due to its stainless steel properties

MATERIAL
Zamak DIN-EN 1774-ZnAl4Cu1
PIN: V1: Zamak DIN-EN 1774-ZnAl4Cu1
PIN: V2: Stainless Steel

MATERIAL	M	FINISH	F
Zamak	1	Chrome plated	1
		Black coated	2

Group Code	Material	Finish	Versiyon
493	1	F	V

Hinge Rotation Angle



Note: Bolts are supplied

SIDE HINGES

SIDE HINGE 593

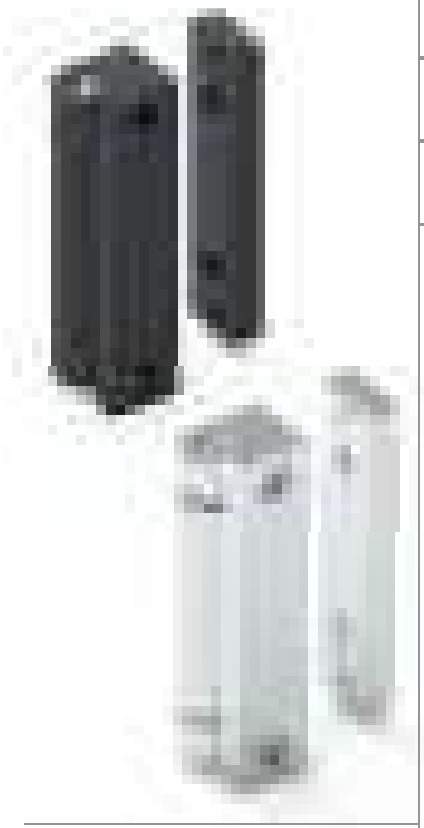

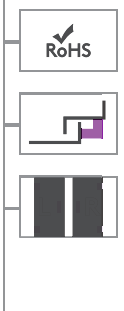

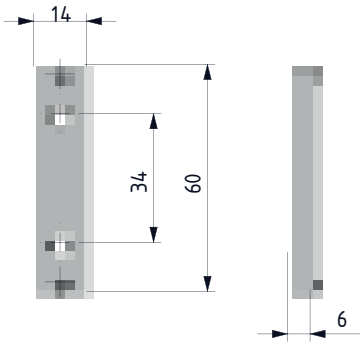

Adaptör

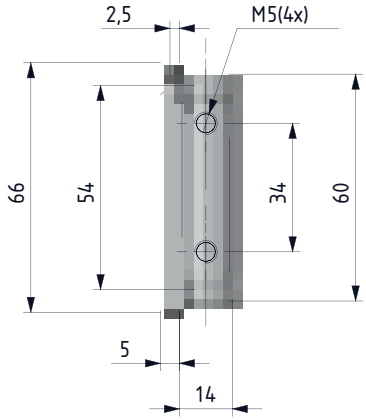

Spacer version

593 1-F-25

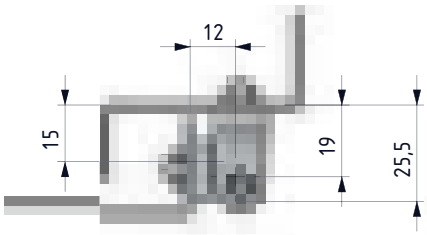

Standard version

593 1-F-19

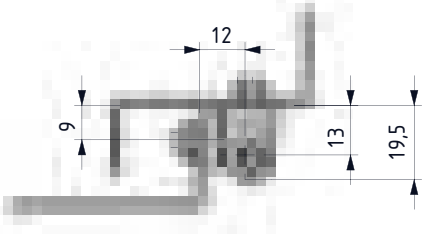

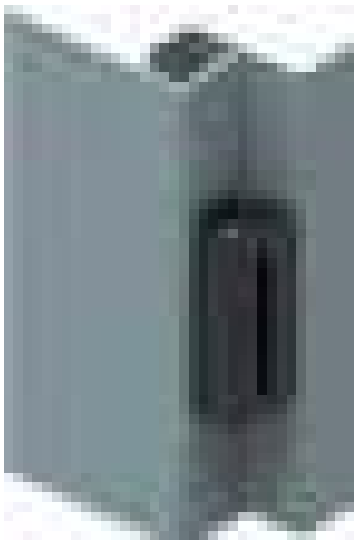

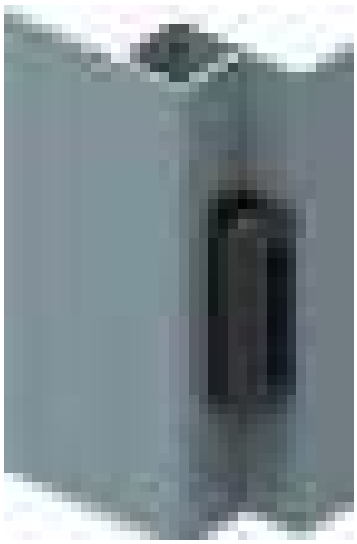

- Spacer bar available for different dimensions
- Stainless steel hinge pin

MATERIAL
Zamak DIN-EN 1774-ZnAl4Cu1
PIN: Stainless Steel

MATERIAL	M	FINISH	F
Zamak	1	Chrome plated	1
		Black coated	2

Hinge Rotation Angle



Group Code	Material	Finish	Height
593	1	F	H

Note: Bolts are not supplied

tel | +90 212 721 44 44 fax | +90 212 721 44 45

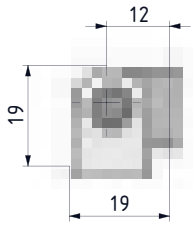

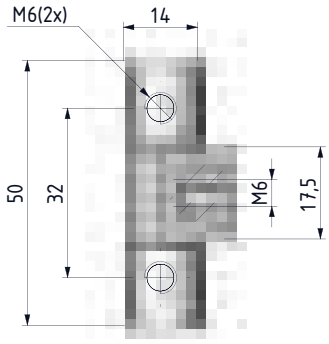

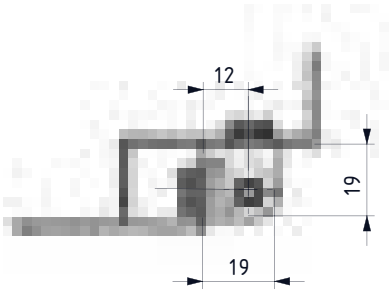



693 SIDE HINGE

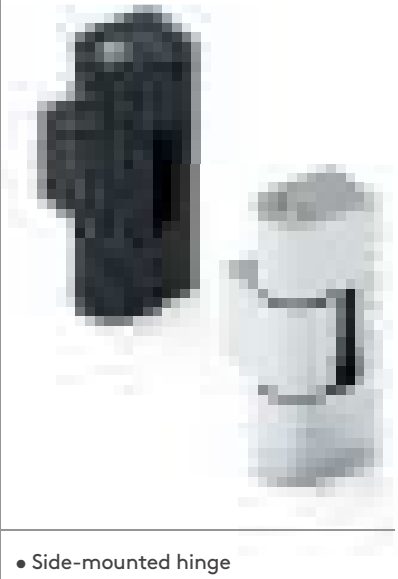

- Side-mounted hinge
- Stainless steel hinge pin
- Supplied assembled

MATERIAL
Zamak DIN-EN 1774-ZnAl4Cu1
PIN: Stainless Steel

MATERIAL	M	FINISH	F
Zamak	1	Chrome plated	1
		Black coated	2

Group Code	Material	Finish
693	1	F

Hinge Rotation Angle
0 180°

FAST FIND INDEX

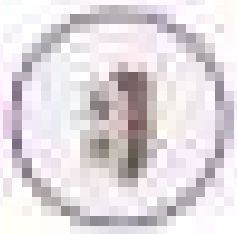
302


303

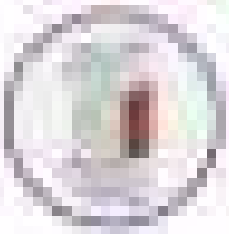
304

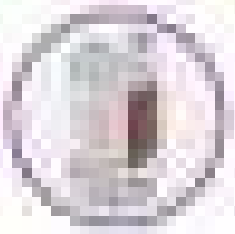
305

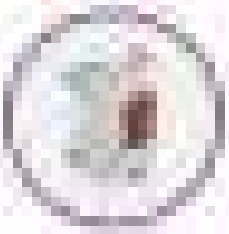
306


307

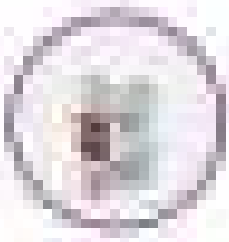
308-309

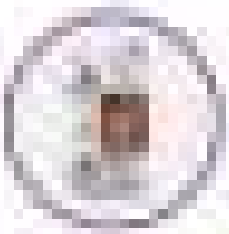
310-311


312-313

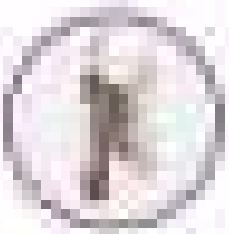
314-315

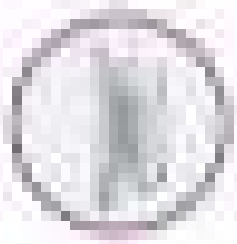
316-317

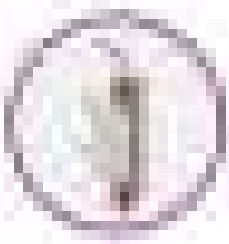
318-319

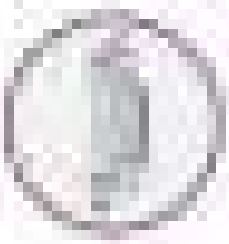
320

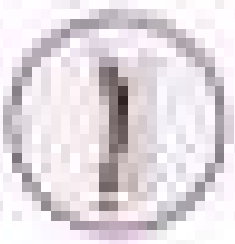
321

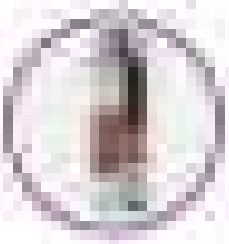
322

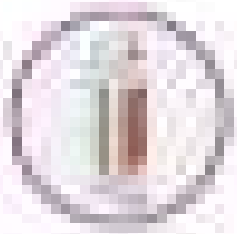
323

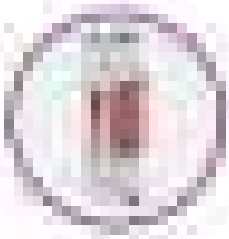
324

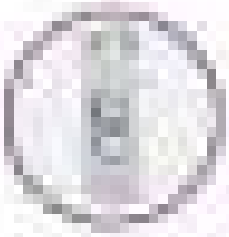
325

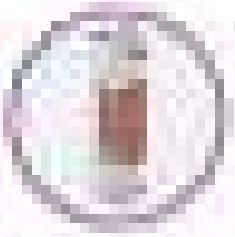
326

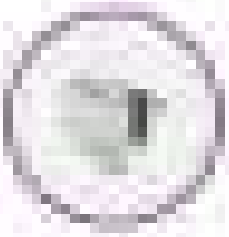
327


328


329-330

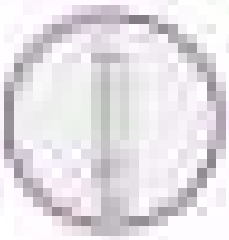
331

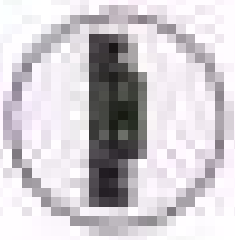
332


333



CONCEALED HINGES

300-333

mesan
ESSENTRA COMPONENTS

e-mail | info@mesanlocks.com web | www.mesanlocks.com

CONCEALED HINGE 094

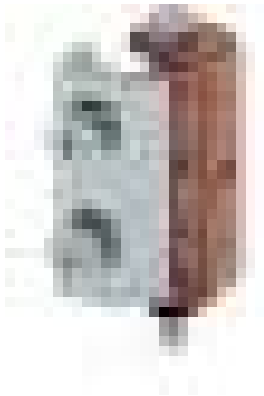

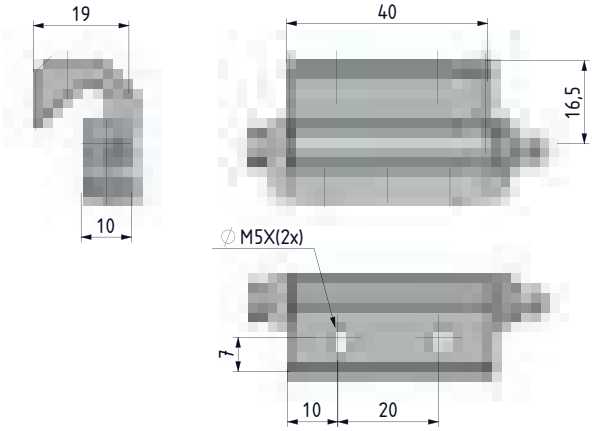

- For 25 mm folded doors
- Middle part copper plated for easy welding

MATERIAL

BODY: Zamak DIN-EN 1774-ZnAl4Cu1 or Aluminium

FIXED PART: Steel

FINISH

BODY: Zinc plated or no finish

FIXED PART: Copper plated

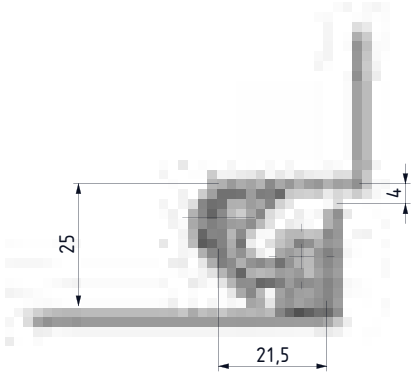

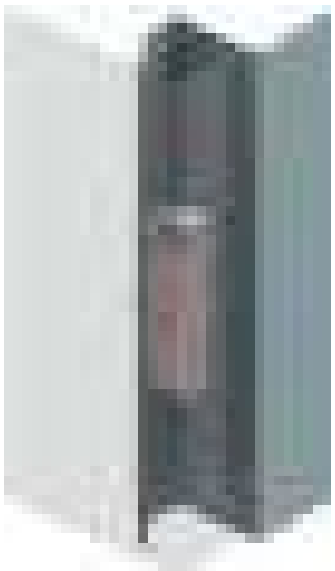

MATERIAL	M	FINISH	F
Zamak	1	Zinc plated	3
		No finish	0
Aluminium	5	Matte anodized	7

Group Code	Material	Finish
094	M	F

Hinge Rotation Angle



Note: Bolts are supplied

tel | +90 212 721 44 44 fax | +90 212 721 44 45

194

CONCEALED HINGE

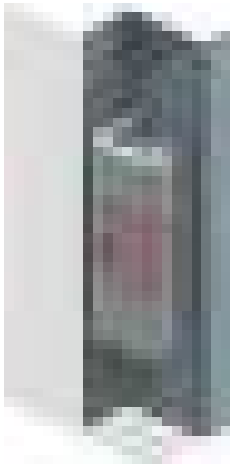

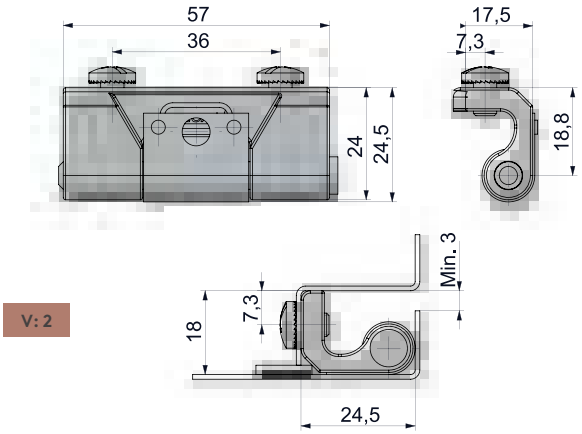

V: 2

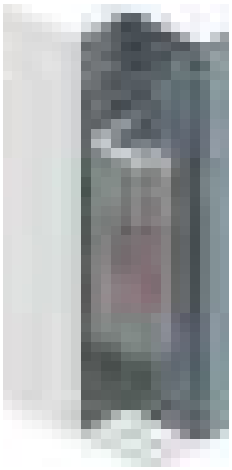

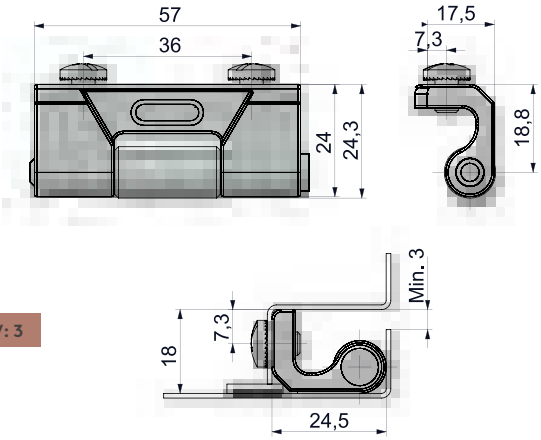

V: 3

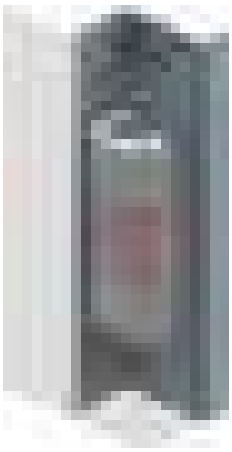

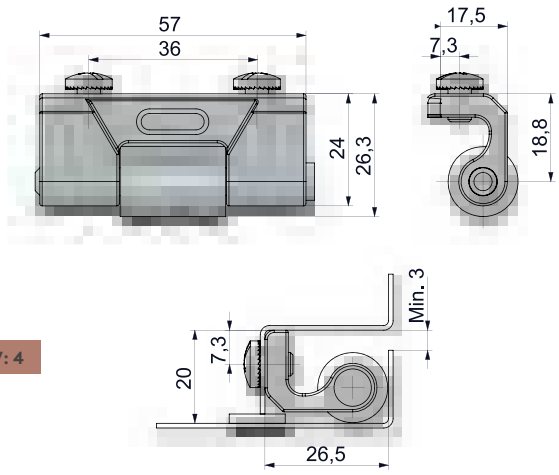

V: 4

MATERIAL	M	FINISH	F
Zamak	1	Zinc plated	3
		No finish	0

Group Code	Material	Finish	Version
194	1	F	V



- For doors with a bend of between 18 mm and 27 mm
- Centre part copper plated for easy welding
- The centre part available in different versions

MATERIAL
BODY: Zamak DIN-EN 1774-ZnAl4Cu1
FIXED PART: Steel

FINISH
BODY: Zinc plated or no finish
FIXED PART: Copper plated

Note: Bolts are supplied

Hinge Rotation Angle

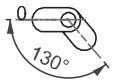

CONCEALED HINGE

096



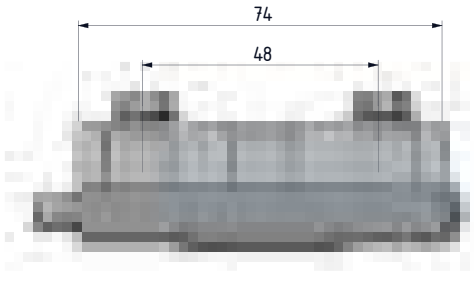

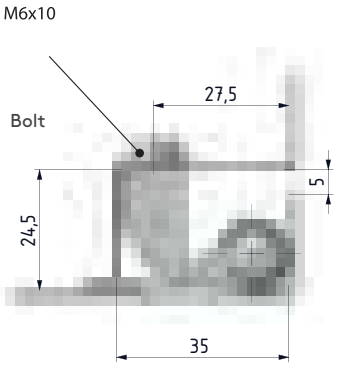

- For doors with a 24.5 mm bend
- Suitable for both panel and door-profile fixing

MATERIAL
BODY: Zamak DIN-EN 1774-ZnAl4Cu1
FIXED PART: Steel

FINISH
BODY: Zinc plated or no finish
FIXED PART: Copper plated



Hinge Rotation Angle



Note: Bolts are supplied

MATERIAL	M	FINISH	F
Zamak	1	Zinc plated	3
		No finish	0

Group Code	Material	Finish
096	1	F

tel | +90 212 721 44 44 fax | +90 212 721 44 45

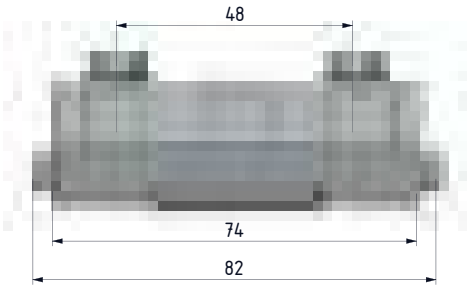

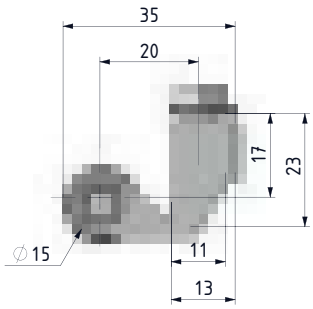

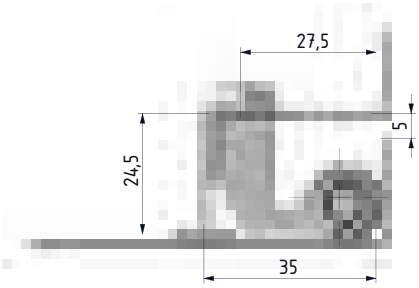

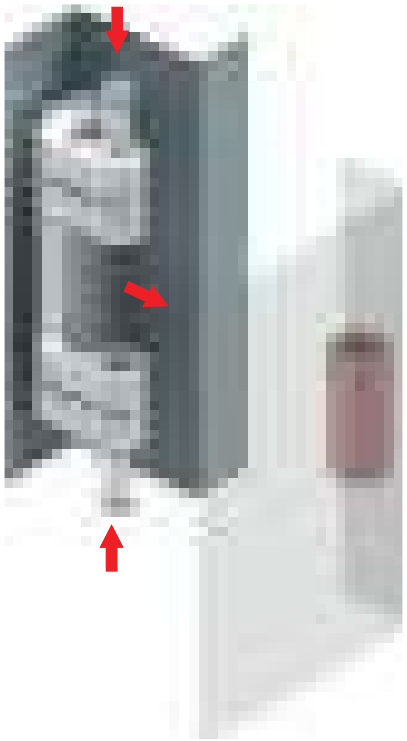



096 CONCEALED HINGE



- Door can be taken out of frame without removing the pins
- Easy assembly
- Suitable for 24.5 mm door bend

MATERIAL

BODY:	Zamak DIN-EN 1774-ZnAl4Cu1
FIXED PART:	Steel
PIN:	Stainless Steel

FINISH

BODY:	Zinc plated or no finish
FIXED PART:	Copper plated

MATERIAL	M	FINISH	F
Zamak	1	Zinc plated	3
		No finish	0

Group Code	Material	Finish	Version
096	1	F	2

Hinge Rotation Angle

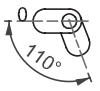

Note: Bolts are supplied

CONCEALED HINGE

196

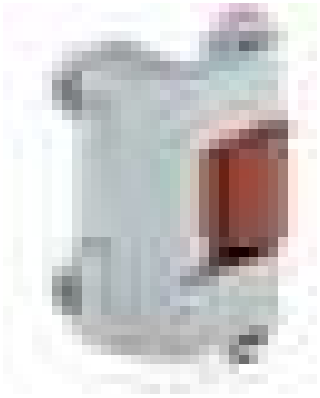

- For 21.5 mm to 24.5 mm bended doors
- Two sizes available
- Smaller alternative to 096 hinge

MATERIAL

BODY: Zamak DIN-EN 1774-ZnAl4Cu1

FIXED PART: Steel

FINISH

BODY: Zinc plated or no finish

WELDING PART: Copper plated

V: 20

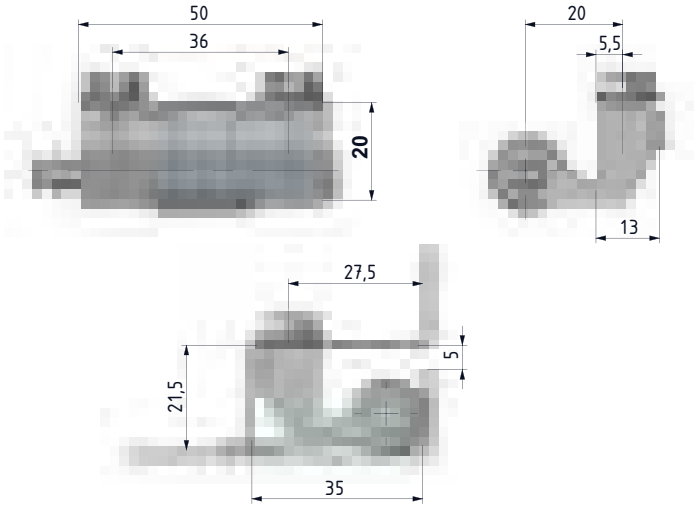

V: 23

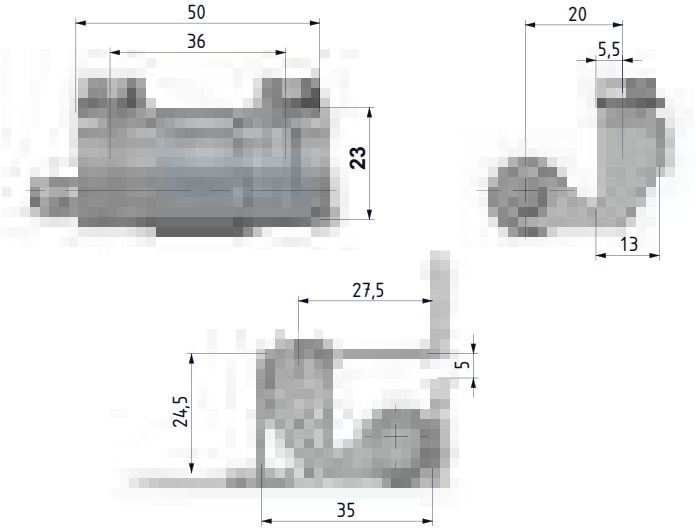



MATERIAL	M	FINISH	F
Zamak	1	Zinc plated	3
		No finish	0

Group Code	Material	Finish	Version
196	1	F	V

Hinge Rotation Angle



Note: Bolts are supplied

tel | +90 212 721 44 44 fax | +90 212 721 44 45

294 CONCEALED HINGE

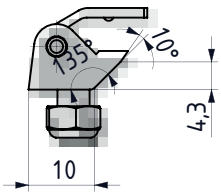

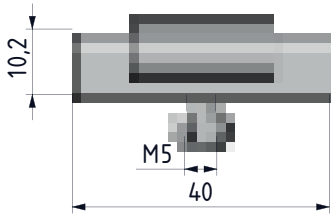

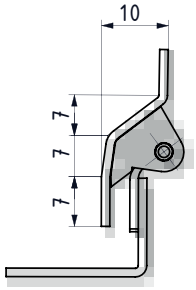



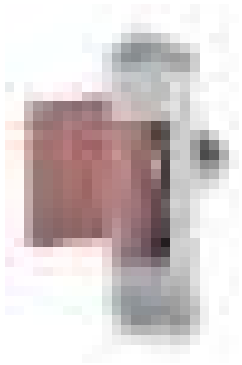

- For small panels having a 10 mm internal bend
- Designed to maximize space
- Copper plated for easy welding

MATERIAL
BODY: Zamak DIN-EN 1774-ZnAl4Cu1
FIXED PART: Steel
PIN: Steel

FINISH

BODY:	Zinc plated or no finish
FIXED PART:	Copper plated

MATERIAL	M	FINISH	F
Zamak	1	Zinc plated	3
		No finish	0

Group Code	Material	Finish
294	1	F

Hinge Rotation Angle



Note: Bolts are not supplied

CONCEALED HINGE

296

V: 1



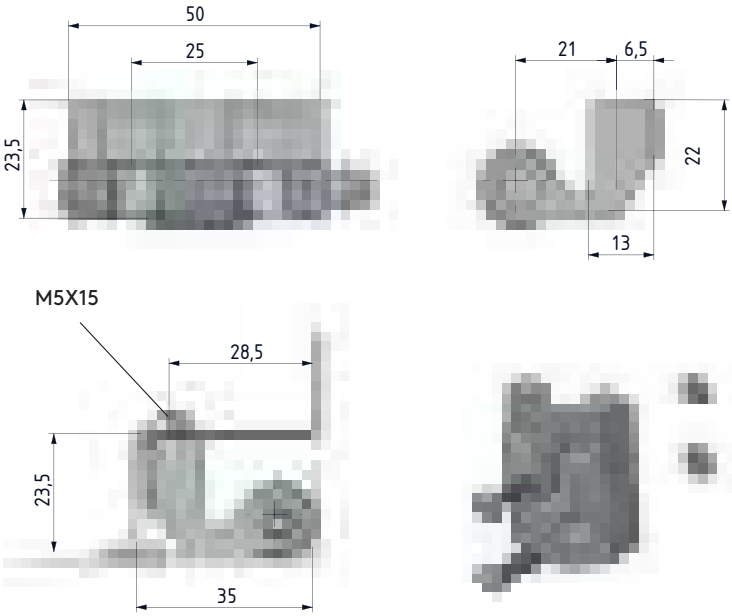

- For doors with a 23.5 mm bend.
- Smaller, more competitive alternative to 096 hinge

MATERIAL

BODY: Zamak DIN-EN 1774-ZnAl4Cu1

FIXED PART: Steel

FINISH

BODY: Zinc plated or no finish

WELDING PART: Copper plated



MATERIAL	M	FINISH	F
Zamak	1	Zinc plated	3
		No finish	0

Group Code	Material	Finish	Version
296	1	F	1

Hinge Rotation Angle

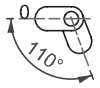

Note: Bolts are not supplied

tel | +90 212 721 44 44 fax | +90 212 721 44 45

296 CONCEALED HINGE

V: 2

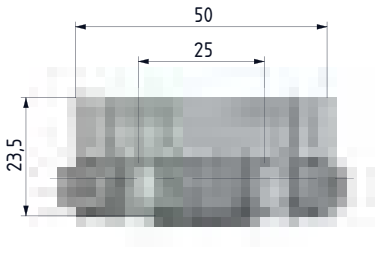

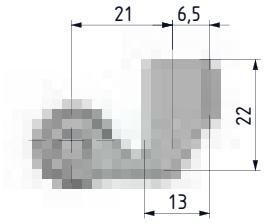

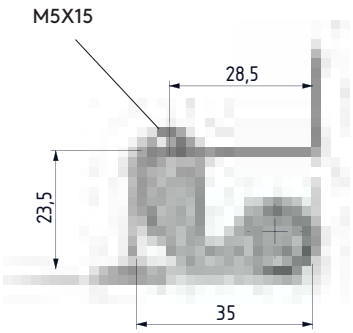

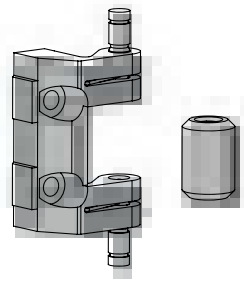

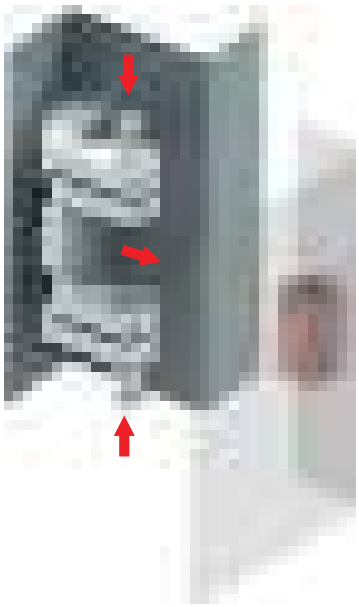



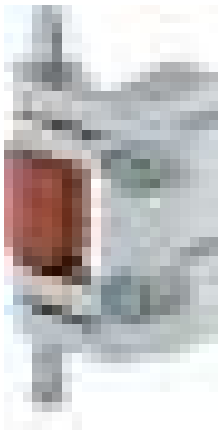

- Door part can be removed out from frame part without removing the pins
- Provides easy assembly
- Suitable for 23.5mm door bend

MATERIAL

BODY: Zamak DIN-EN 1774-ZnAl4Cu1

FIXED PART: Steel

FINISH

BODY: Zinc plated or no finish

FIXED PART: Copper plated

MATERIAL	M	FINISH	F
Zamak	1	Zinc plated	3
		No finish	0

Group Code	Material	Finish	Version
296	1	F	2

Hinge Rotation Angle



Note: Bolts are not supplied

CONCEALED HINGE

095

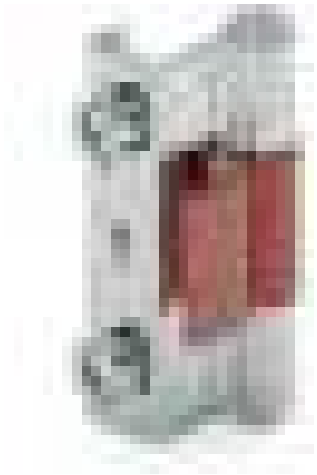

- **Stainless steel version: page 492**
- For doors with a bend of 22.5 mm or more. Available drilled with two holes or with two-mounting studs.
- Centre part available in different versions

MATERIAL
Steel

FINISH
BODY: Zinc plated
WELDING PART: Copper plated

Hinge Rotation Angle



V:1

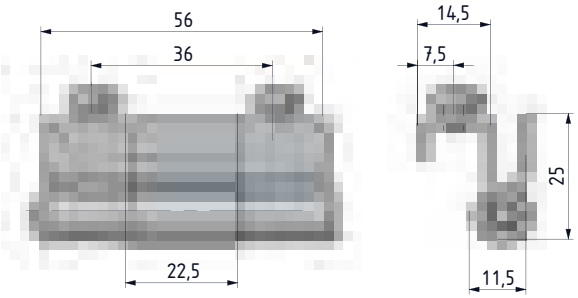

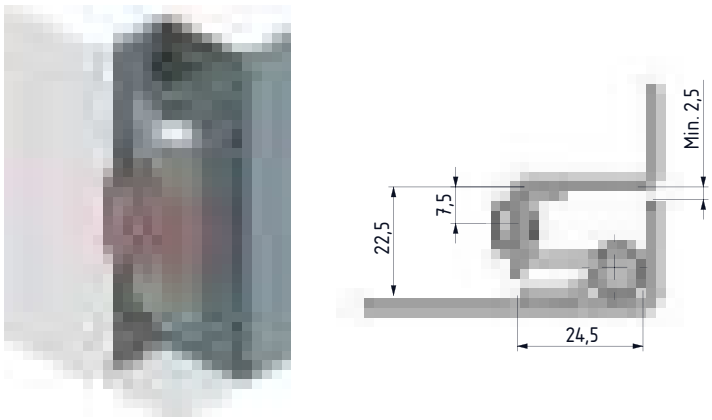

V:2

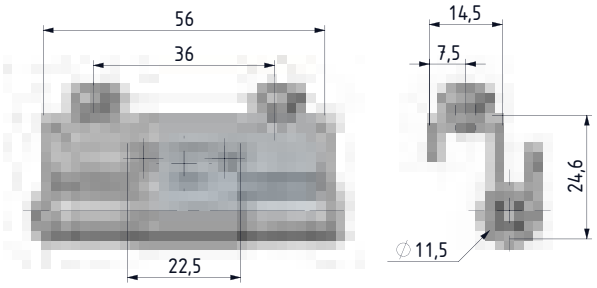

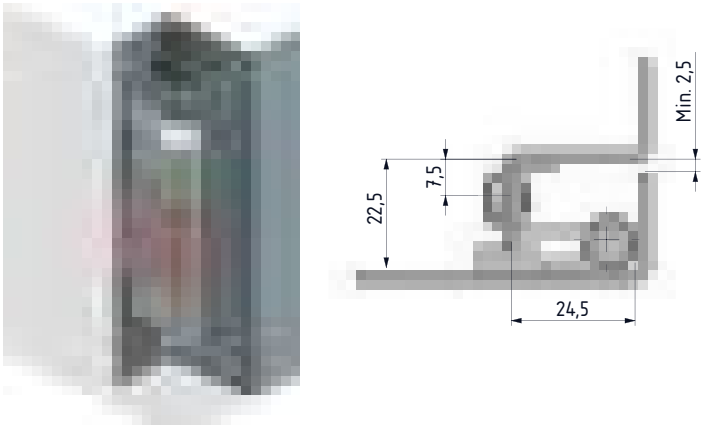

Group Code	Material	Finish	Version	Option
095	6	3	V	

tel | +90 212 721 44 44 fax | +90 212 721 44 45

095 CONCEALED HINGE

V: 3

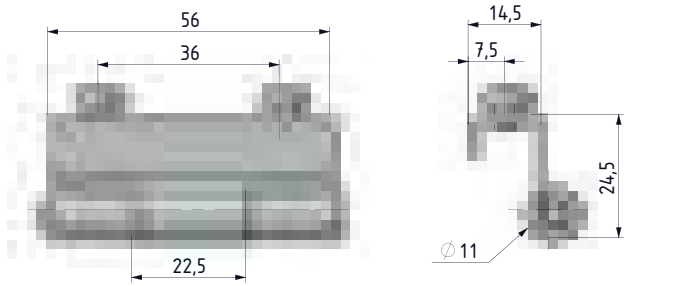

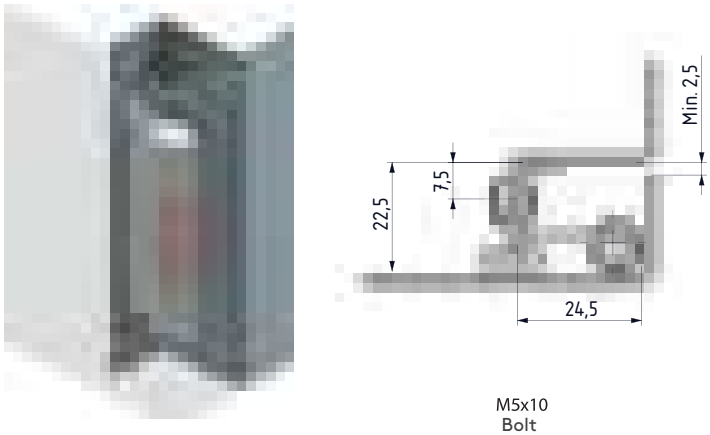

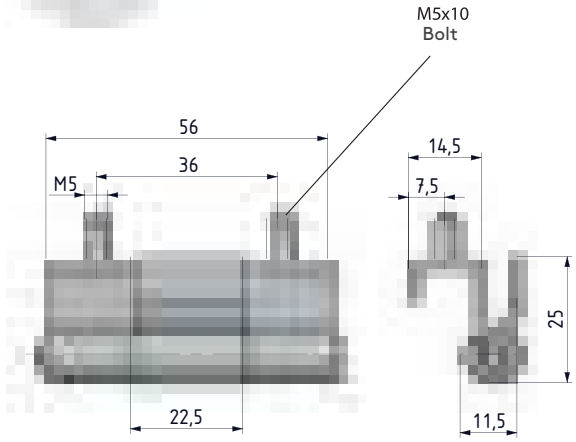

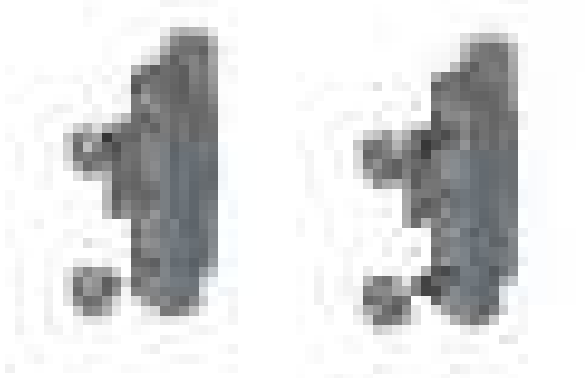

OP:0
Hole

OP:1
Stud

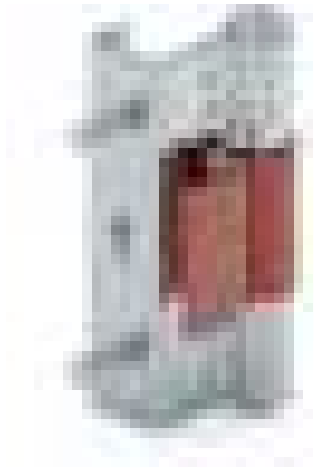

- For doors with a bend of 22.5 mm or more
- Available drilled with two holes or with two-mounting studs
- Centre part available in different versions

MATERIAL
Steel

FINISH
BODY: Zinc plated
WELDING PART: Copper plated

Hinge Rotation Angle



Group Code	Material	Finish	Version	Option
095	6	3	V	OP

Note: Bolts are supplied

CONCEALED HINGE

195

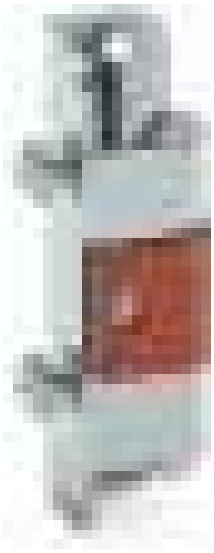

- For doors with a bend of between 23.5 mm and 25.5 mm
- Easily fixed to panel or door profile

MATERIAL
Steel

FINISH
BODY: Zinc plated
WELDING PART: Copper plated

Hinge Rotation Angle



Note: Bolts are supplied

Fixed: 1

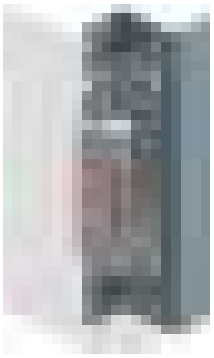

V: 2

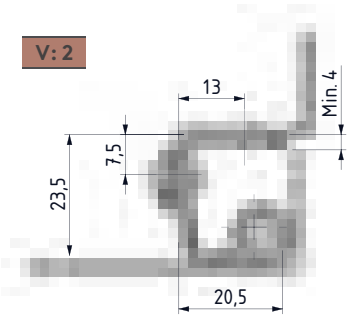

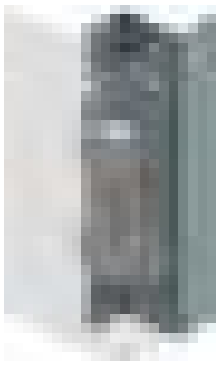

V:3

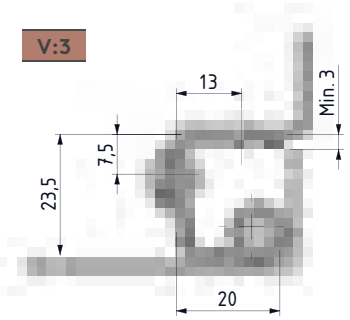

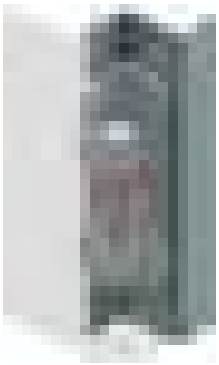

V:4

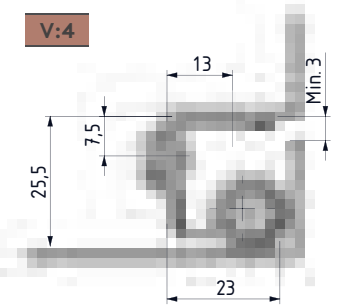

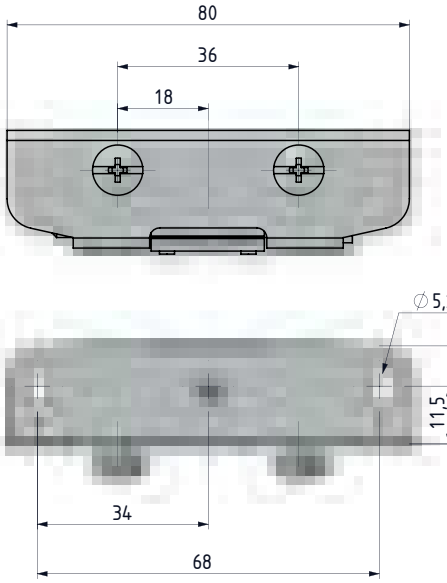

tel | +90 212 721 44 44 fax | +90 212 721 44 45

195 CONCEALED HINGE

Fixed: 2
For profile body

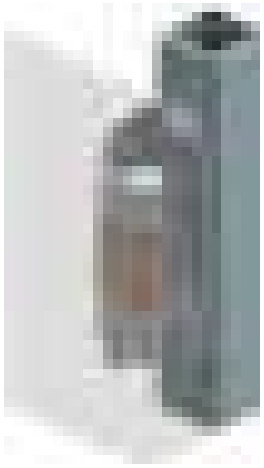

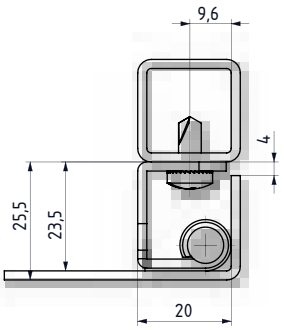

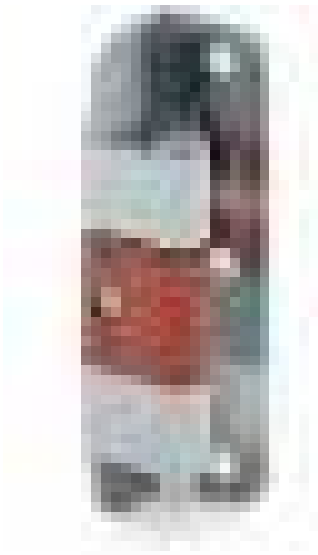

- For doors with a bend of between 23.5 mm and 25.5 mm
- Easily fixed to panel or door profile

MATERIAL
Steel

FINISH
BODY: Zinc plated
WELDING PART: Copper plated

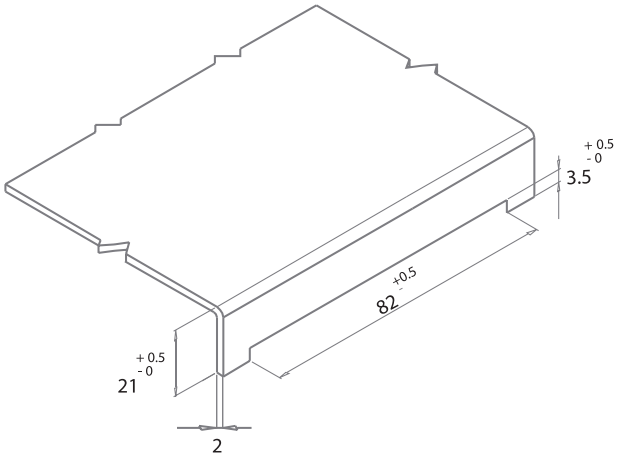

Group Code	Version
195	V

Hinge Rotation Angle



Note: Bolts are supplied

CONCEALED HINGE 295

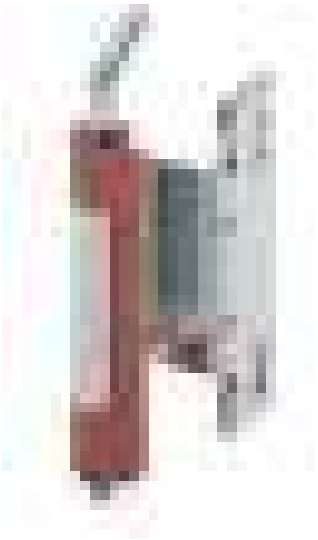

- **Stainless steel version: page 482**
- For doors with a bend of between 20 mm and 24 mm
- Frame part screwed on, door part welded on
- Suitable for left- and right-hand applications

MATERIAL
Steel

FINISH
BODY: Zinc plated
WELDING PART: Copper plated

Hinge Rotation Angle



Note: Bolts are not supplied

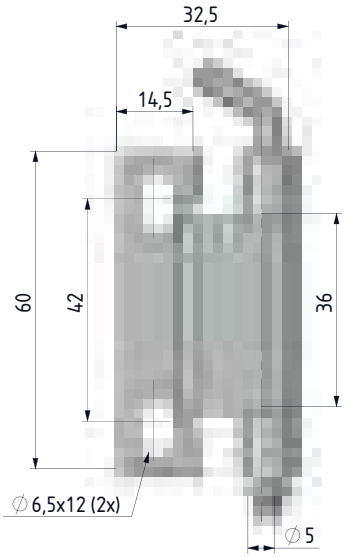

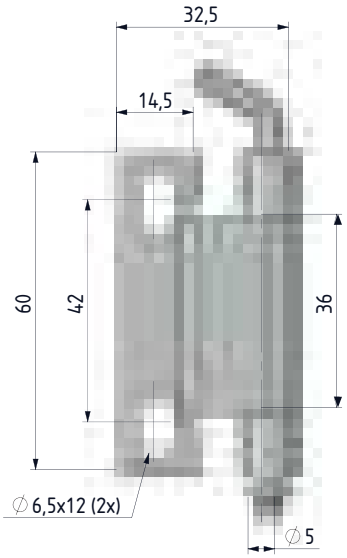

V: 1

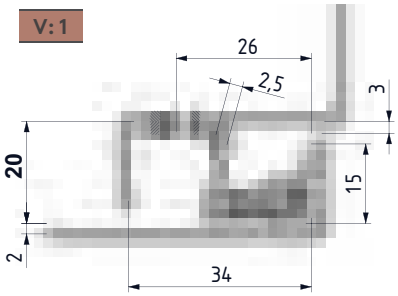

V: 2

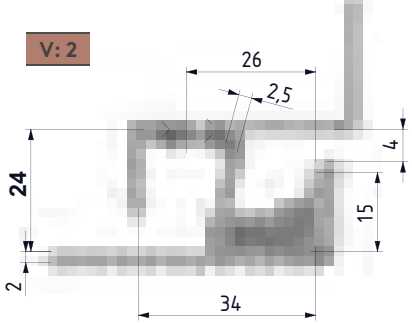



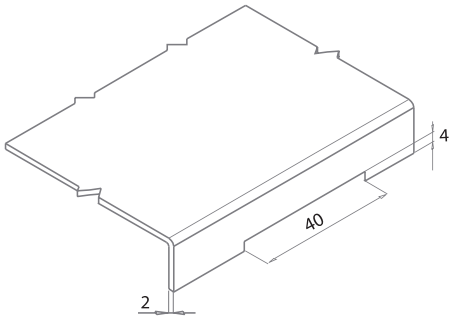

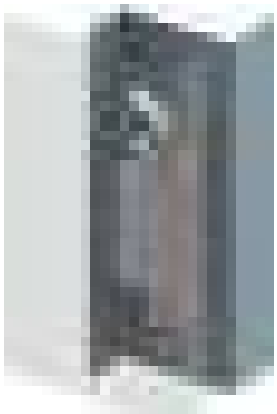

Group Code	Material	Finish	Version
295	6	3	V

tel | +90 212 721 44 44 fax | +90 212 721 44 45

295 CONCEALED HINGE

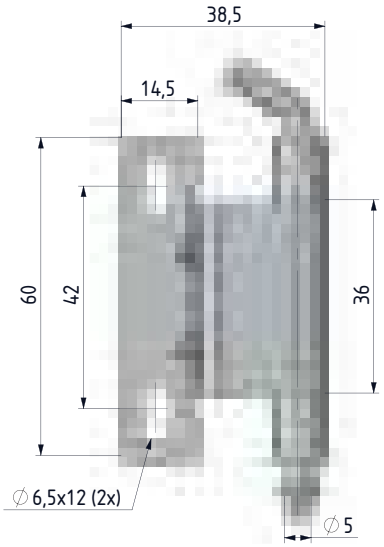

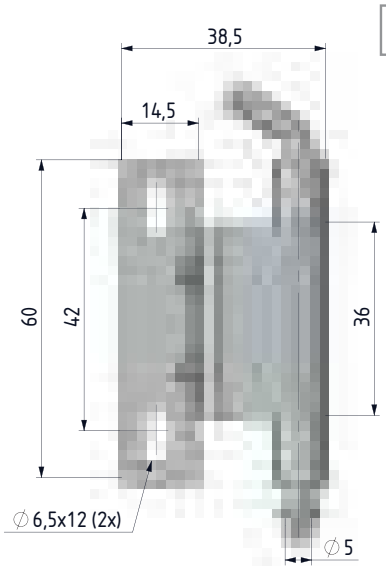

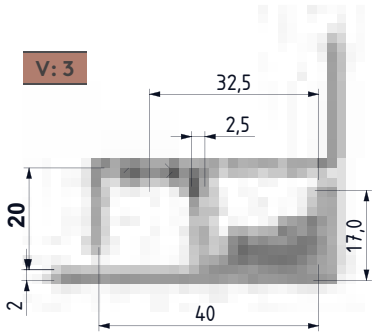

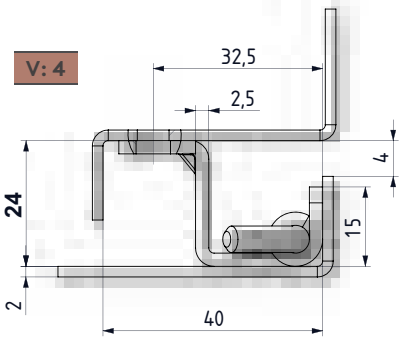

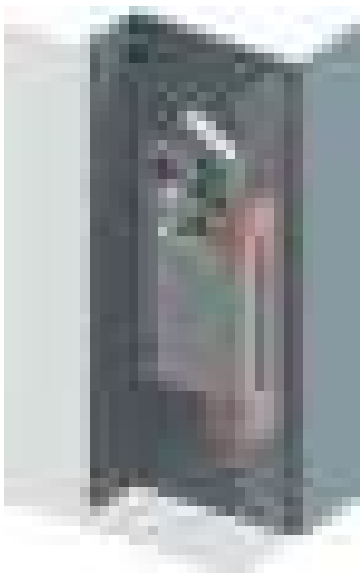

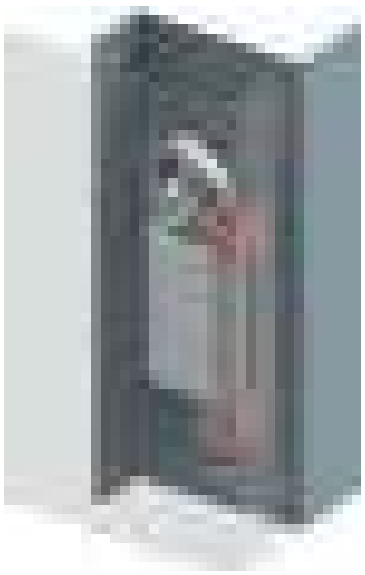

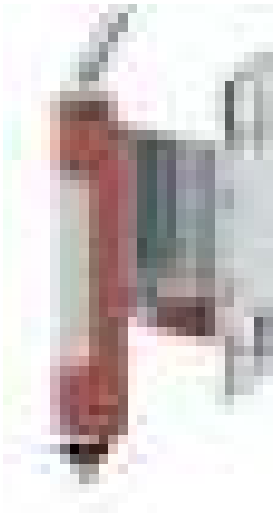

- **Stainless steel version: page 483**

MATERIAL
Steel

FINISH
BODY: Zinc plated
WELDING PART: Copper plated

Hinge Rotation Angle



Group Code	Material	Finish	Version
295	6	3	V

Note: Bolts are not supplied

CONCEALED HINGE 395

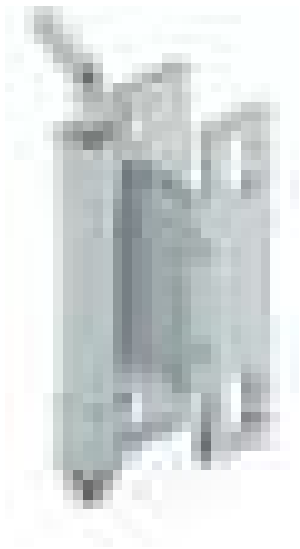

- **Stainless steel version: page 484**
- For doors with a bend of between 20 mm and 24 mm
- Frame part screwed on, door part welded on
- Suitable for left- and right-hand application

MATERIAL
Steel

FINISH
Zinc plated

Hinge Rotation Angle



Note: Bolts are not supplied

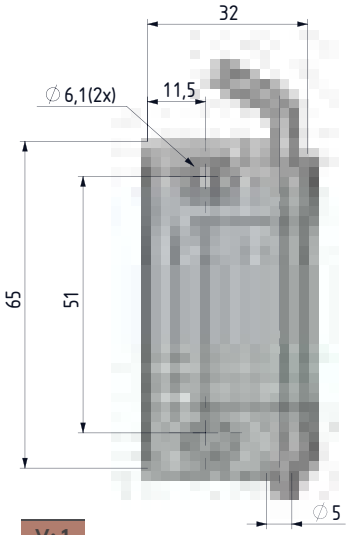

V: 1

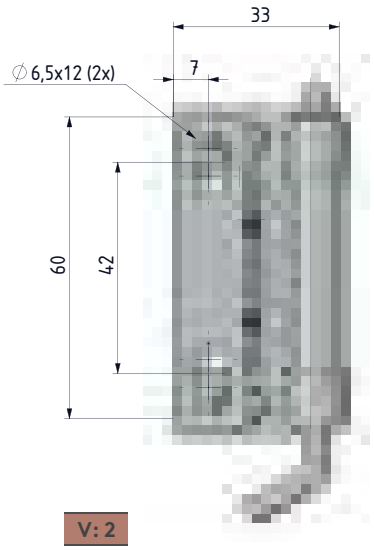

V: 2

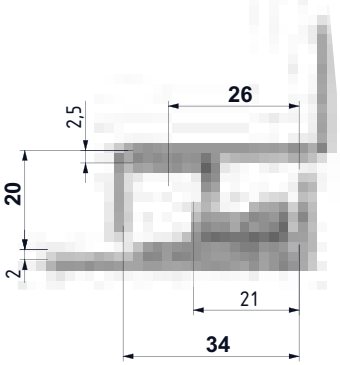

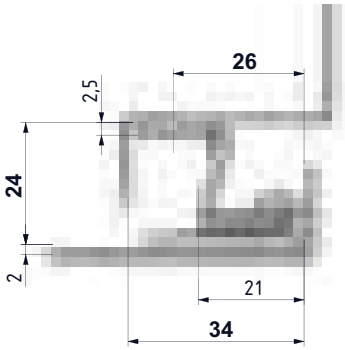

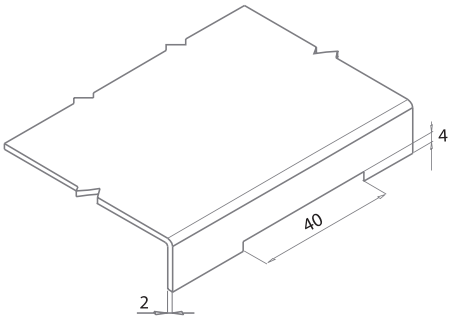



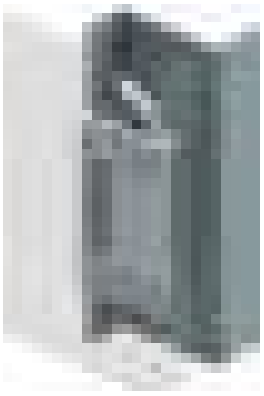

Group Code	Material	Finish	Version
395	6	3	V

tel | +90 212 721 44 44 fax | +90 212 721 44 45

395 CONCEALED HINGE

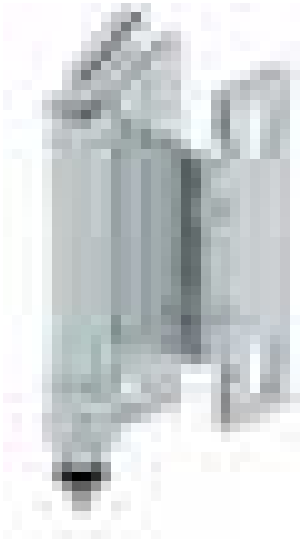

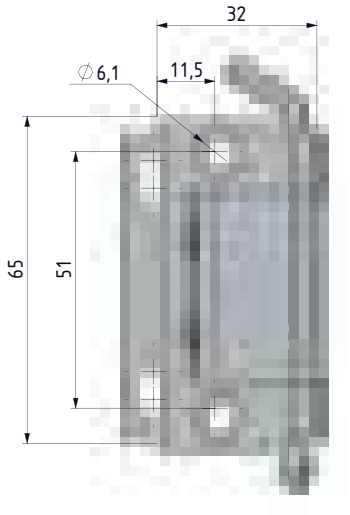

V: 3

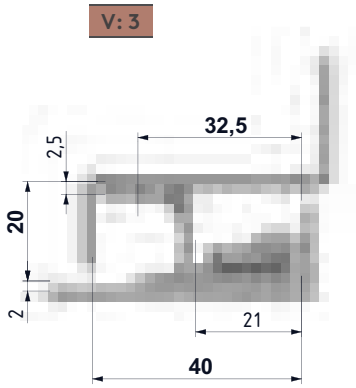

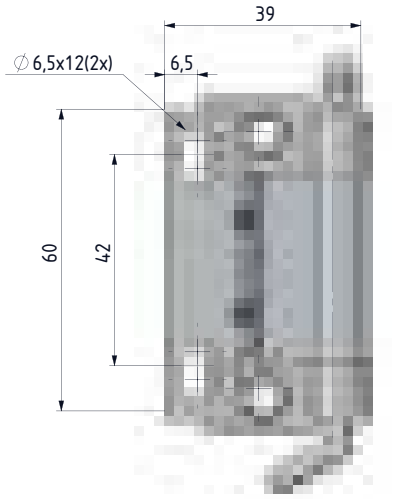

V: 4

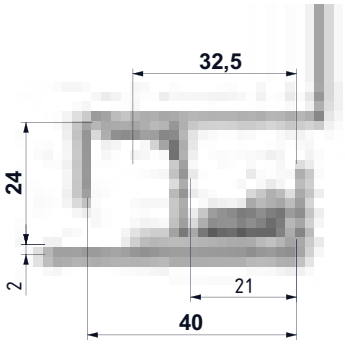





- **Stainless steel version: page 485**

MATERIAL
Steel

FINISH
Zinc plated

Hinge Rotation Angle



Group Code	Material	Finish	Version
395	6	3	V

Note: Bolts are not supplied

CONCEALED HINGE

695

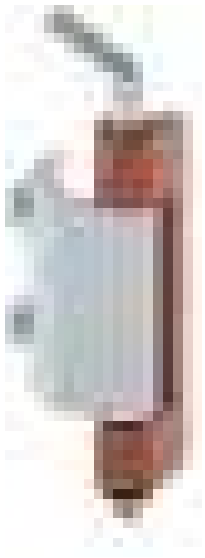

- **Stainless steel version: page 486**
- For doors with a bend of 18 mm
- Frame part screwed on, door part either welded or screwed on
- Suitable for left- and right-hand applications

MATERIAL
Steel

FINISH
BODY: Zinc plated
WELDING PART: Copper plated

Hinge Rotation Angle



Note: Bolts are supplied

V: 1

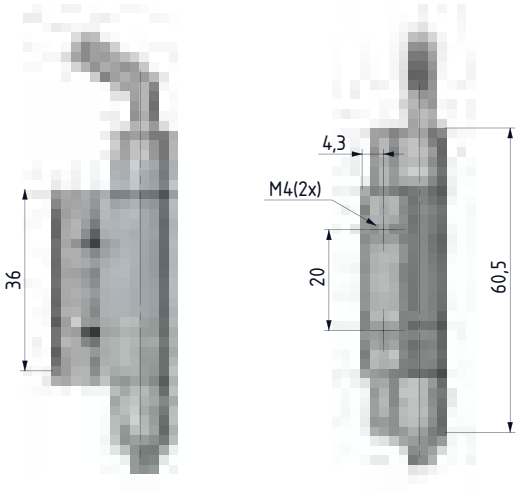

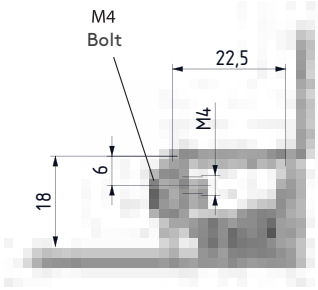



Group Code	Material	Finish	Version
695	6	3	1

tel | +90 212 721 44 44 fax | +90 212 721 44 45

695 CONCEALED HINGE

V: 2

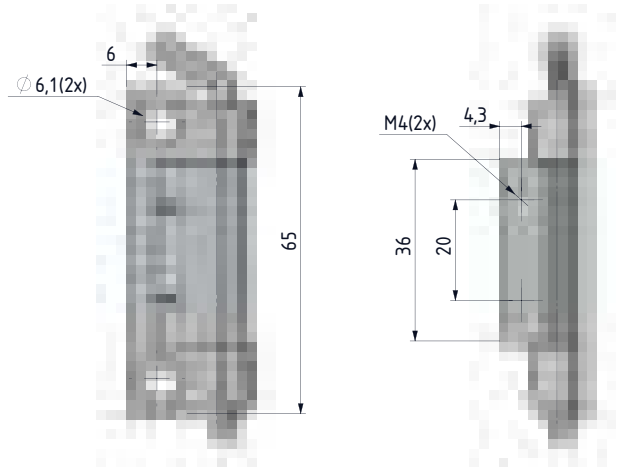

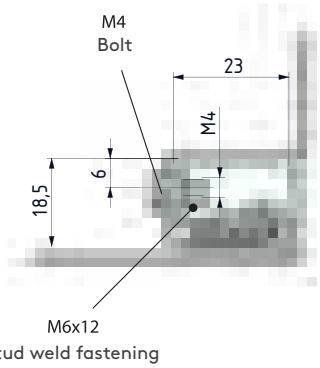

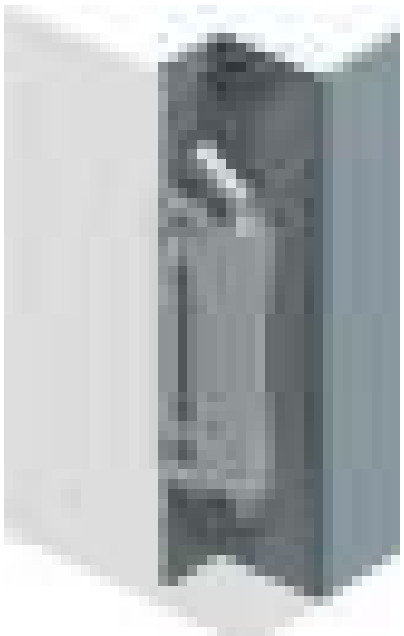

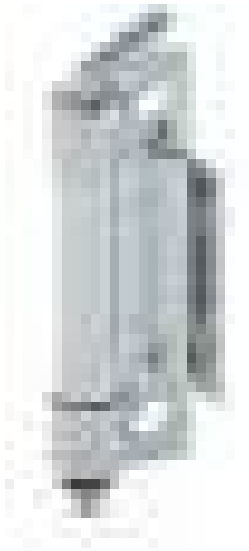

- **Stainless steel version: page 487**
- For doors with a bend of 18.5 mm
- Frame part screwed on, door part mounted by nut to welded stud on door
- Suitable for left- and right-hand application

MATERIAL
Steel

FINISH
Zinc plated

Hinge Rotation Angle



Group Code	Material	Finish	Version
695	6	3	2

Note: Bolts are not supplied

CONCEALED HINGE 795

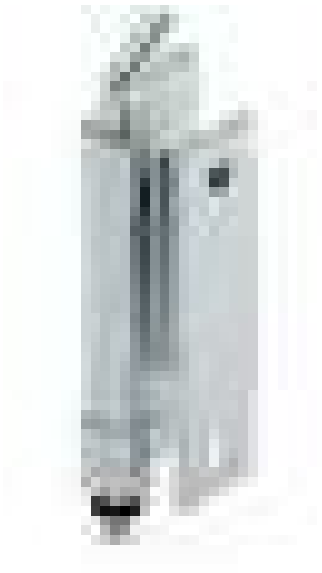

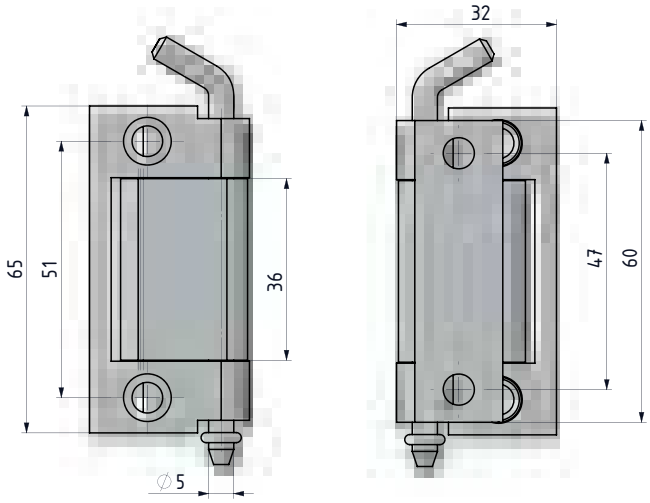

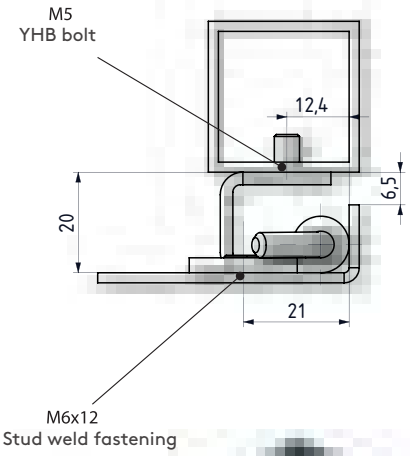



- **Stainless steel version: page 488**
- For doors with a bend of 20 mm to fix profiles
- Frame part screwed on, door part mounted by nut to welded stud on door
- Suitable for left- and right-hand application

MATERIAL
Steel

FINISH
Zinc plated

Hinge Rotation Angle

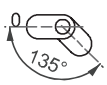

Note: Bolts are not supplied

Group Code	Material	Finish
795	6	3

tel | +90 212 721 44 44 fax | +90 212 721 44 45

1795 CONCEALED HINGE

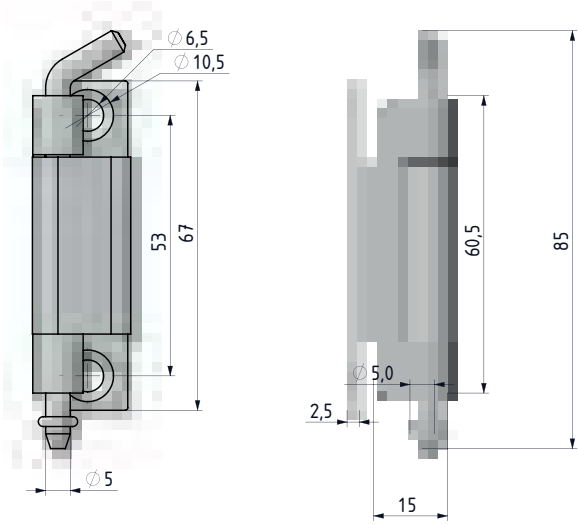

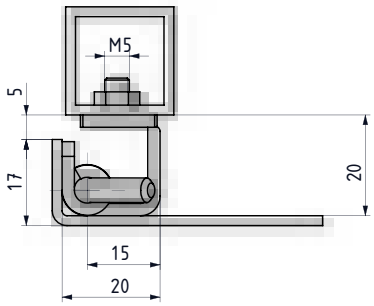



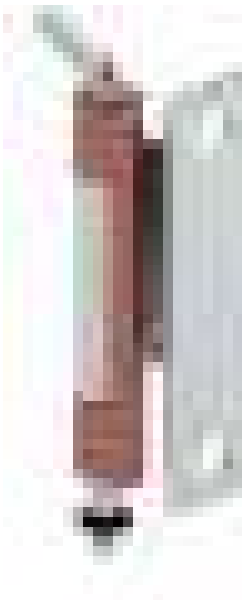

- For doors with a bend of between 20 mm
- Easily fixed to panel or door profile due to hinge design
- Suitable for left - and right- hand applications

MATERIAL

BODY:	Steel
FIXED PART:	Steel
PIN:	Steel

FINISH

BODY:	Zinc plated
FIXED PART:	Copper plated

Hinge Rotation Angle



Group Code	Material	Finish
1795	6	3

Note: Bolts are not supplied

CONCEALED HINGE

895

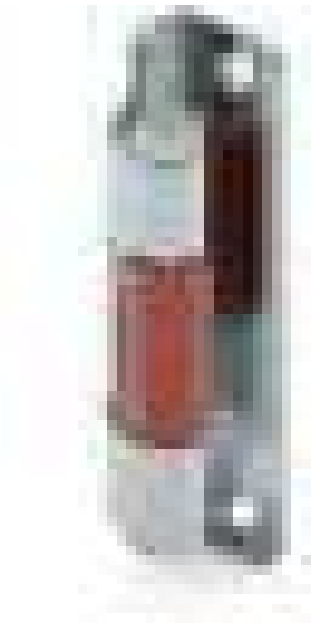

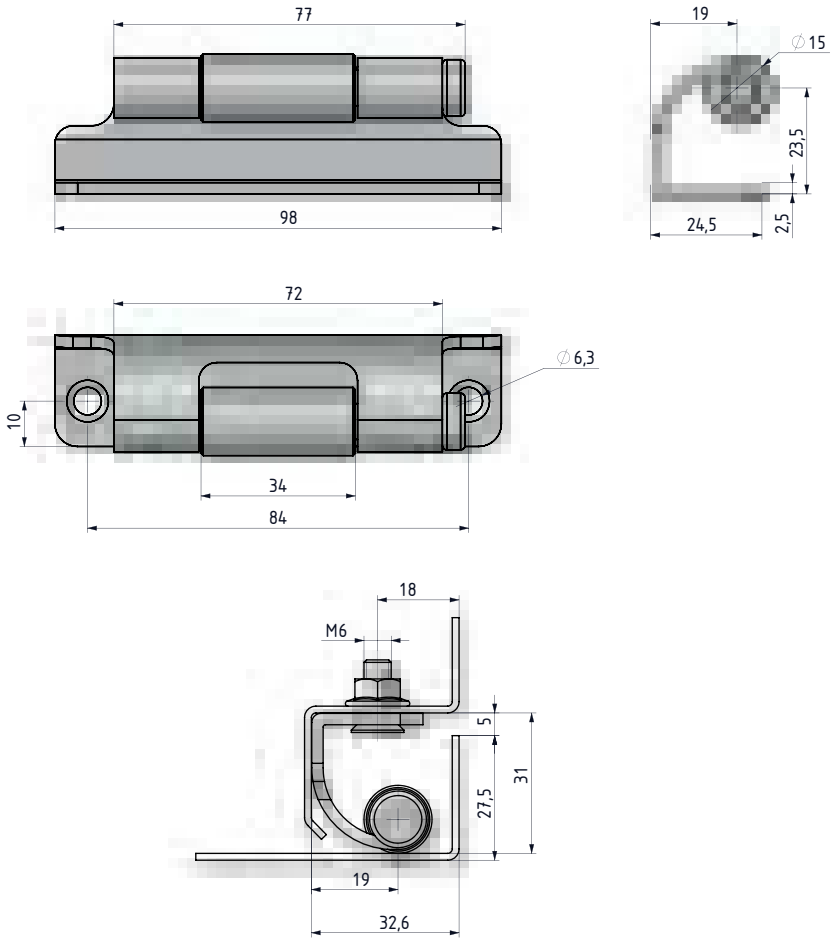

- Side part can be mounted with M5 screws
- Centre part copper plated for easy welding
- Suitable for heavy-duty applications
- Pin should be mounted during hinge assembly

MATERIAL
Steel

FINISH
BODY: Zinc plated
WELDING PART: Copper plated

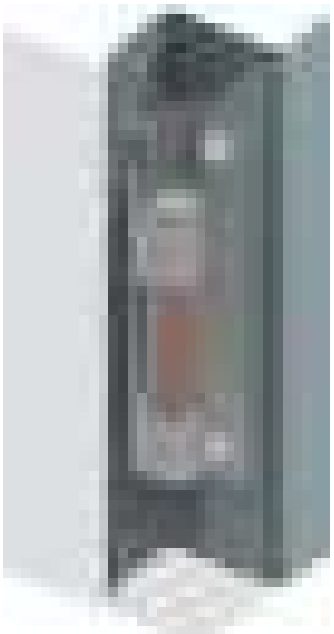

Hinge Rotation Angle



Note: Bolts are not supplied

Group Code	Material	Finish
895	6	3

tel | +90 212 721 44 44 fax | +90 212 721 44 45

1095 CONCEALED HINGE

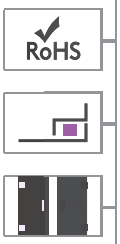



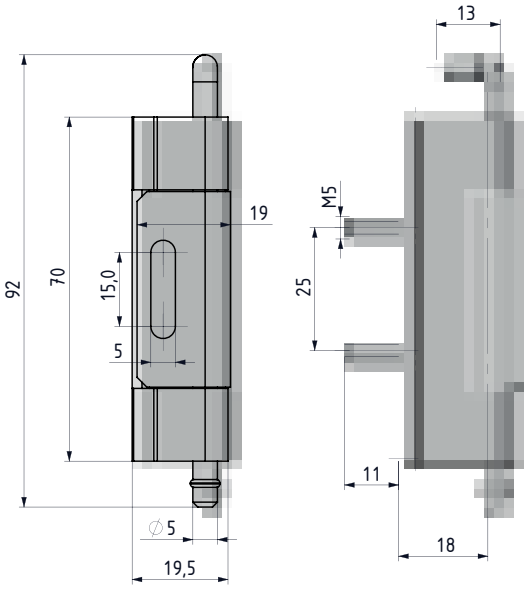

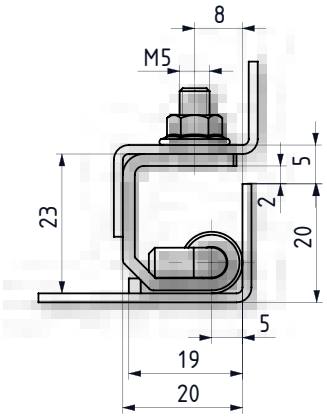



- For doors with a bend of 23 mm
- Easily fixed to panel or door profile
- Suitable for left- and right-hand application

MATERIAL
BODY: Steel
FIXED PART: Steel
PIN: Steel

FINISH
BODY: Zinc plated
FIXED PART: Copper plated

Hinge Rotation Angle



Group Code	Material	Finish
1095	6	3

CONCEALED HINGE

995

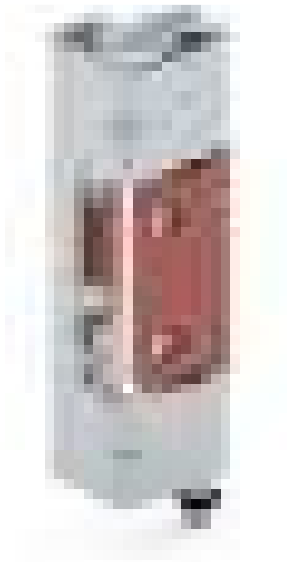

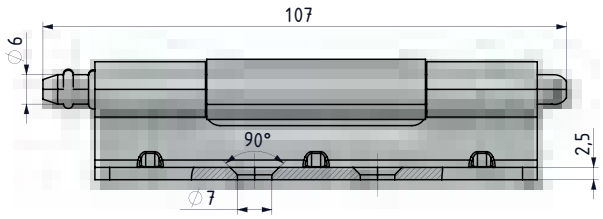

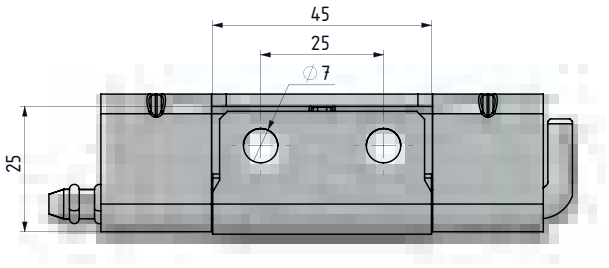

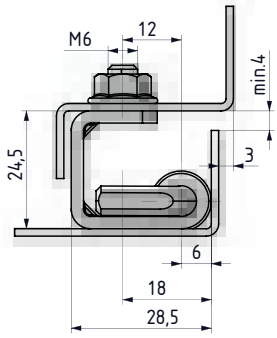

- **Stainless Steel version: page: 491**
- Side part can be mounted with M5 screws
- Centre part copper plated for easy welding
- Suitable for heavy-duty applications
- Suitable for 25 mm bend door cabinets

MATERIAL
Steel

FINISH
BODY: Zinc plated
WELDING PART: Copper plated **(MP1)**

Note: Bolts are not supplied

OP:1
Stud

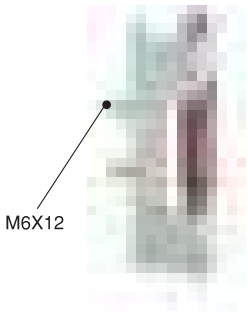

Hinge Rotation Angle



Note: Nuts are not supplied

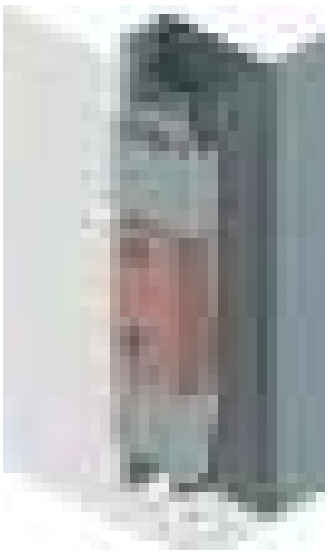

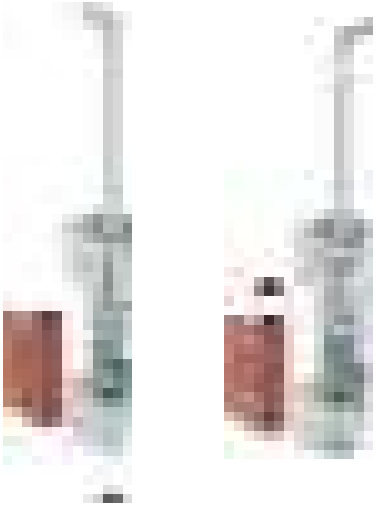

V:3
Fixed by O'ring

V:4
Fixed by clips

Middle Parts

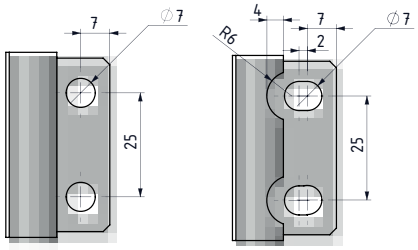

MP: 1
Circle Hole

MP: 2
Slot hole

Group Code	Material	Finish	Version	Middle Part	Option
995	6	3	V	MP	OP

OPTION	OP
Hole	0
Stud	1

tel | +90 212 721 44 44 fax | +90 212 721 44 45

995 CONCEALED HINGE

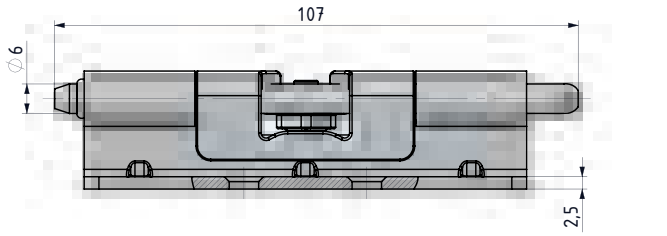

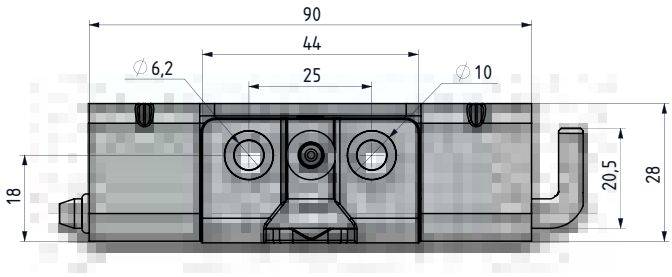

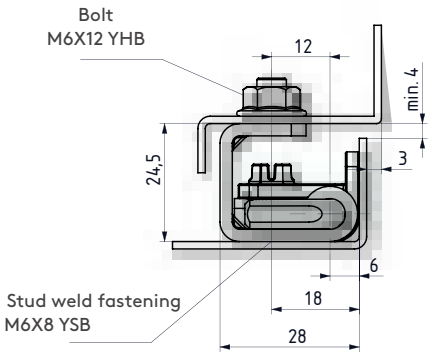



- Suitable for heavy-duty applications
- Suitable for Left- and right-hand applications
- Suitable for 25 mm bend door cabinets
- Door part can be removed by a screw

MATERIAL
BODY: Steel
WELDING PART: Zamak DIN-EN 1774-ZnAl4Cu1

FINISH:
BODY: Zinc plated
WELDING PART: Zinc plated

Position 1
Closed door

Position 2
After the door is opened, cam is rotated 90° with a screwdriver

Position 3
The cover is removed

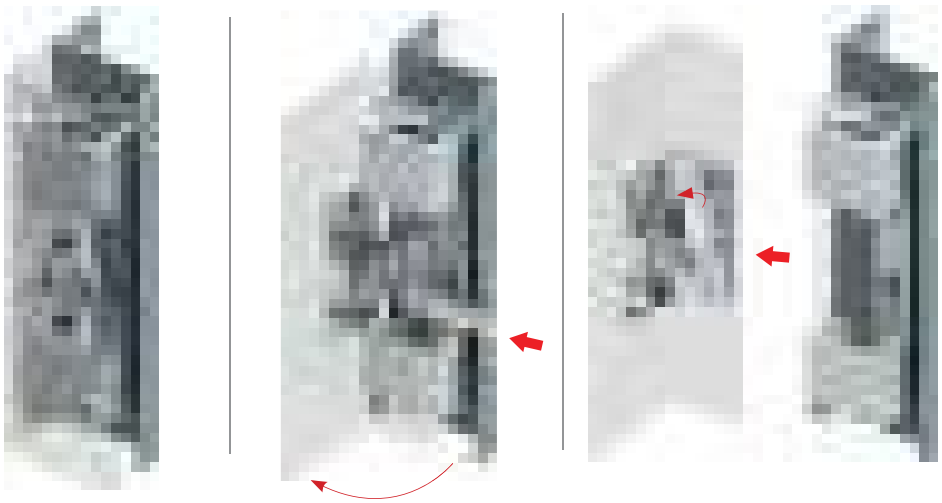

Hinge Rotation Angle



Group Code	Material	Finish	Version	Option
995	6	3	2	OP

OPTION	OP
Hole	0
Stud	1

Note: Bolts and nuts are not supplied

CONCEALED HINGE 1995

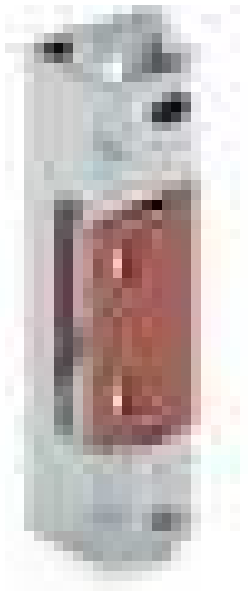





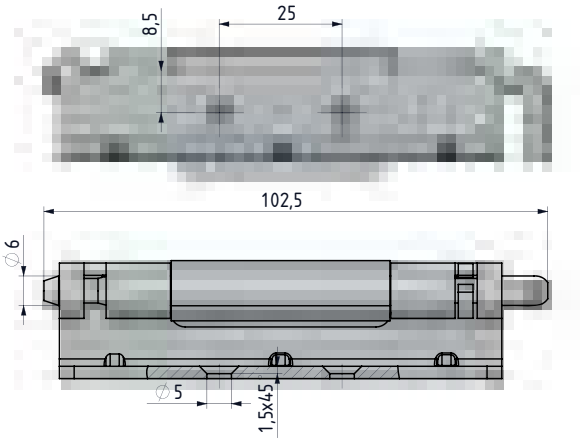

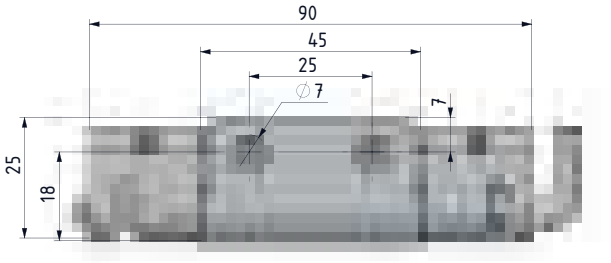

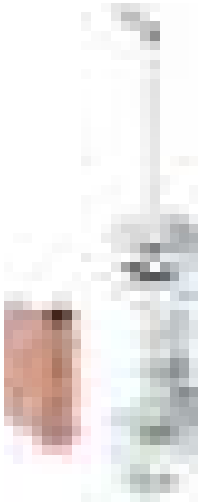

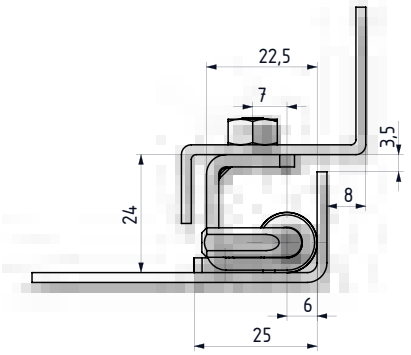

- **Stainless steel version: page 490**
- Remove the door by just removing the pin
- Suitable for 24 mm door bend cabinets
- Copper plated middle part for easy welding

MATERIAL
BODY: Zamak DIN-EN 1774-ZnAl4Cu1
FIXED PART: Steel

FINISH
BODY: Zinc plated
WELDING PART:
MP1: Copper plated
MP2: Zinc Plated



Middle Parts

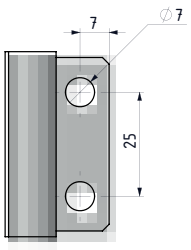

MP: 1
Circle Hole

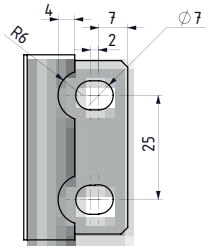

MP: 2
Slot hole

Note: Bolts are not supplied

Group Code	Material	Finish	Version	Middle Part	Option
1995	6	3	4	MP	0

OPTION	OP
Hole	0

tel | +90 212 721 44 44 fax | +90 212 721 44 45

595 CONCEALED HINGE

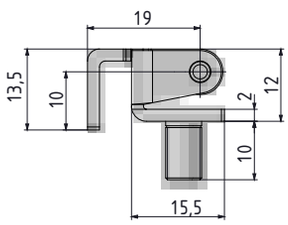

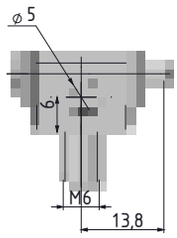

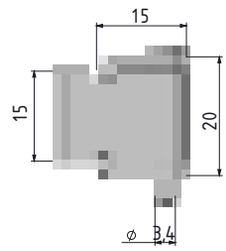

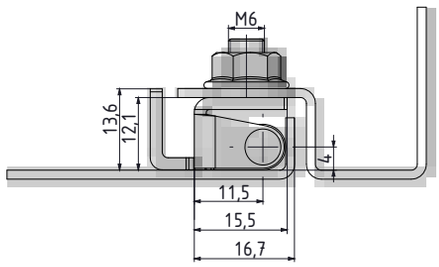

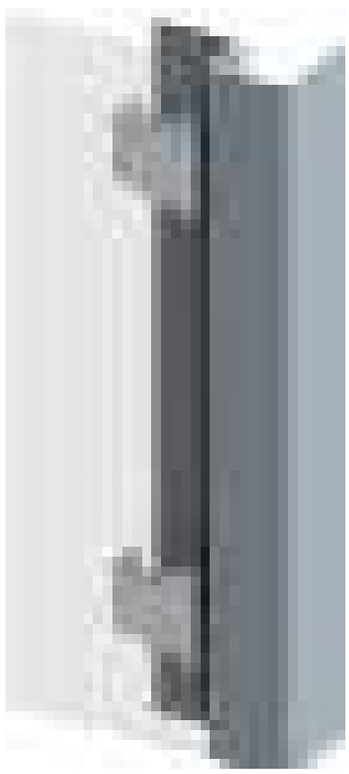

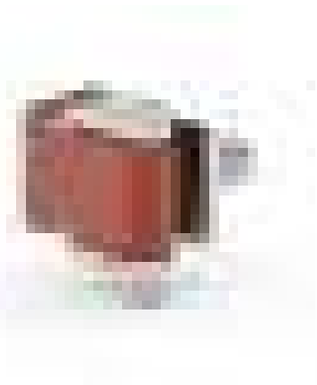

- Can be used for small size panels

MATERIAL
Steel

FINISH
Zinc plated

WELDING PART: Copper Plated

Note: Bolts are supplied

Group Code	Material	Finish
595	6	3

SPRING LOADED

189

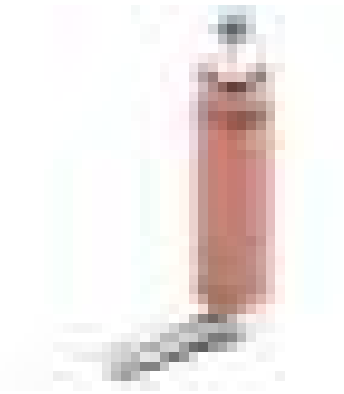

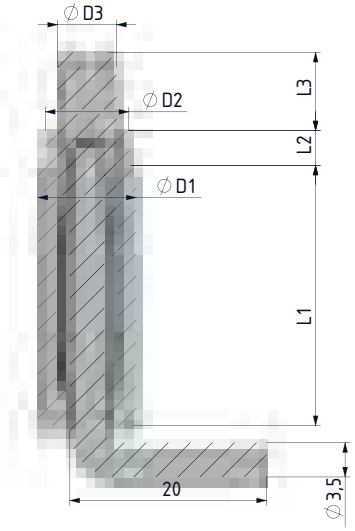

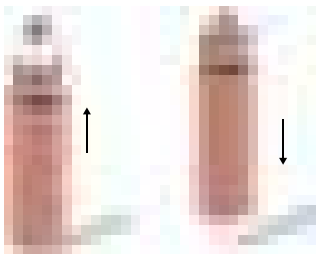

- For internally mounted doors
- Spring loaded hinge for easy door removal
- Body copper plated for easy welding. Available as spring-loaded, up-and-down pair; or spring-loaded up hinge and fixed bottom hingew

MATERIAL
Steel

FINISH
BODY: Copper plated
Other materials: Zinc plated



Hinge Rotation Angle



BOTTOM PIVOT PIN

32003192Y

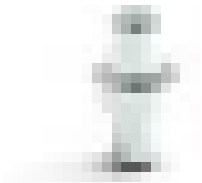

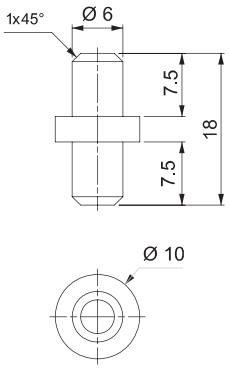

Ø D1	Ø D2	Ø D3	L1 MM	L2 MM	L3 MM	PRODUCT CODE
10	8.5	6	26.5	3.5	9	**189-9**
10	8.5	6	38	3.5	10	**189-10**
12	9	6	38	3.5	10	**189-12**
15	12	9	47	6	14.5	**189-15**

tel | +90 212 721 44 44 fax | +90 212 721 44 45

389 SPRING LOADED

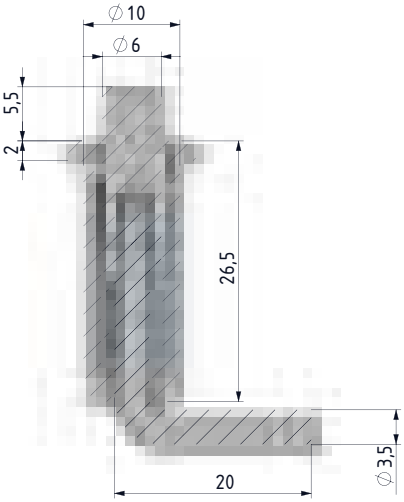





- For internally mounted doors
- Spring-loaded hinge for easy door removal
- Clip fixing for easy assembly
- Suitable for panel thicknesses of between 1 mm and 1.3 mm
- Available as spring-loaded, up-and-down pair; or spring-loaded up hinge and fixed bottom hinge

MATERIAL

BODY:	Polyamide DIN-EN ISO1043-1 PA6 GFR 30
PIN:	Steel

Hinge Rotation Angle



32003192Y BOTTOM PIVOT PIN

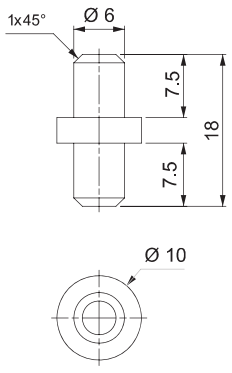

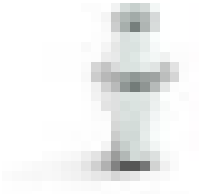

CONCEALED HINGE

089

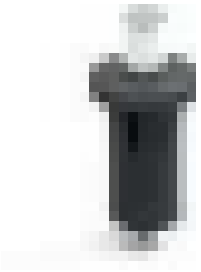

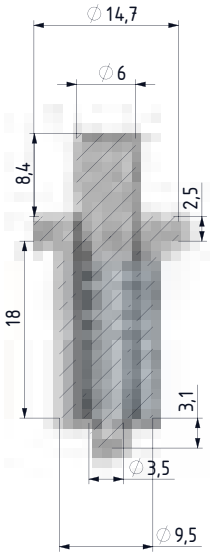

- For internally mounted doors
- Spring-loaded hinge for easy door removal
- Clip fixing for easy assembly
- Suitable for panel thicknesses of between 0.5 mm and 0.8 mm
- Available as spring-loaded, up-and-down pair; or spring-loaded up hinge and fixed bottom hinge

MATERIAL

BODY:	Polyamide DIN-EN ISO1043-1 PA6 GFR 30
PIN:	Steel

Hinge Rotation Angle





BOTTOM PIVOT PIN

32003192Y



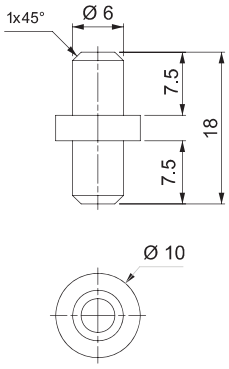

tel | +90 212 721 44 44 fax | +90 212 721 44 45

289 CONCEALED HINGE

V: 1

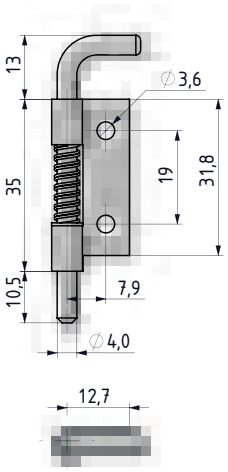

V: 2

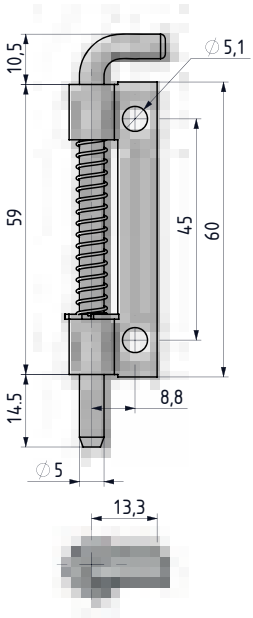

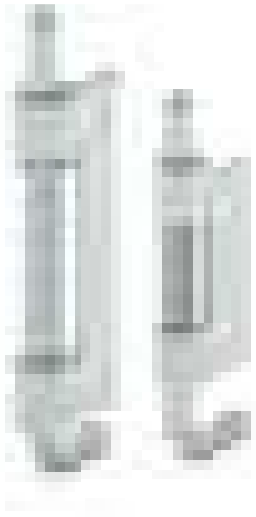

- **Stainless steel version: page 489**
- For internally mounted doors
- Spring loaded hinge for easy door removal
- Both versions are either screwed or welded on
- Suitable for left- and right-hand application

MATERIAL
Steel

FINISH
Zinc plated

DOOR DIRECTION	
Right hand	001
Left hand	002

Group Code	Material	Finish	Version	Door Direction
289	6	3	V	

Hinge Rotation Angle

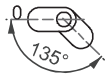

Note: Bolts are not supplied

Note: Assembled RH (as drawn)
Assembled LH (mirror inverted)

CONCEALED HINGE

394

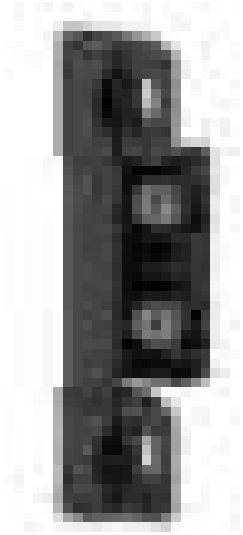

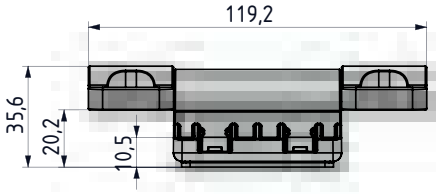

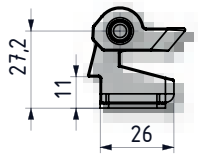

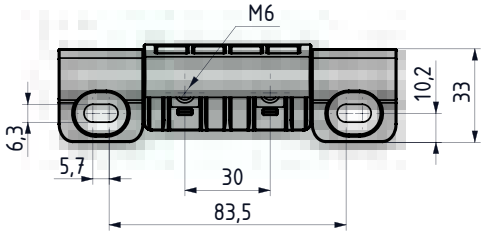

- Suitable for lightweight panels and applications
- Left and right hand application is possible
- Suitable for M6 screws
- 90° hinge rotation angle

MATERIAL
FRAME PART: PA6 GFR30
DOOR PART: PA6 GFR30
NUT: Steel



Hinge Rotation Angle



Note: Bolts are not supplied

tel | +90 212 721 44 44 fax | +90 212 721 44 45

1495 CONCEALED HINGE

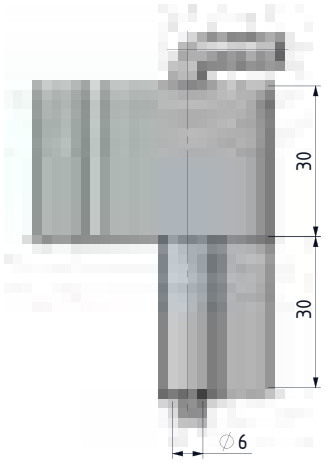

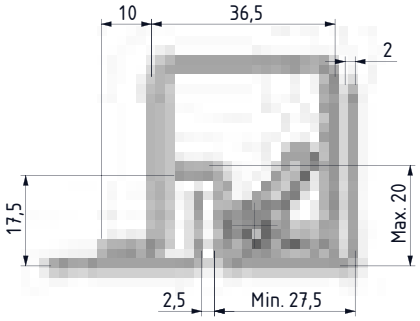

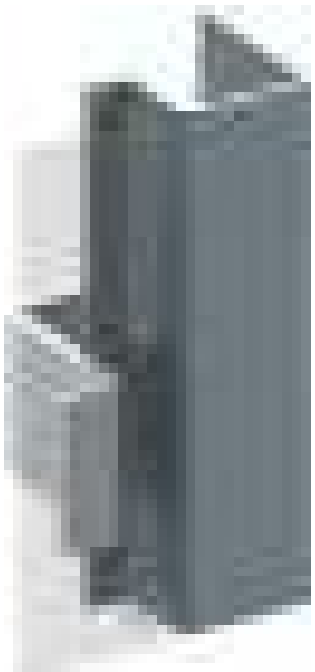

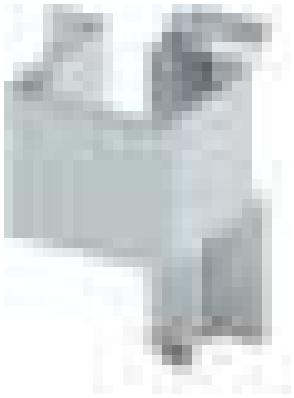

- Frame part and door parts are welded on
- Used for special geometry profiles of the cabinets

MATERIAL
BODY: Steel
PIN: Steel

FINISH
No finish

Group Code	Material	Finish
1495	6	0

FAST FIND INDEX


336

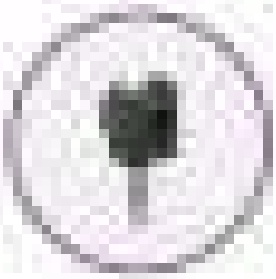
337


338

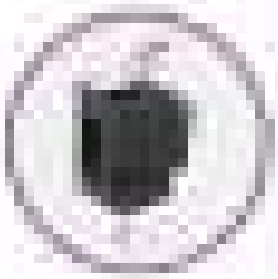
339


340

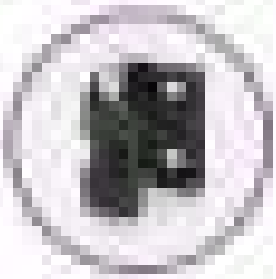
341


342

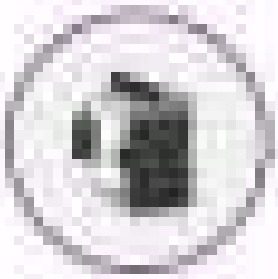
343


344


345


346


347


348


349


350


351



CORNER HINGES

334-351

mesan
ESSENTRA COMPONENTS

e-mail | info@mesanlocks.com web | www.mesanlocks.com

CORNER HINGE

097

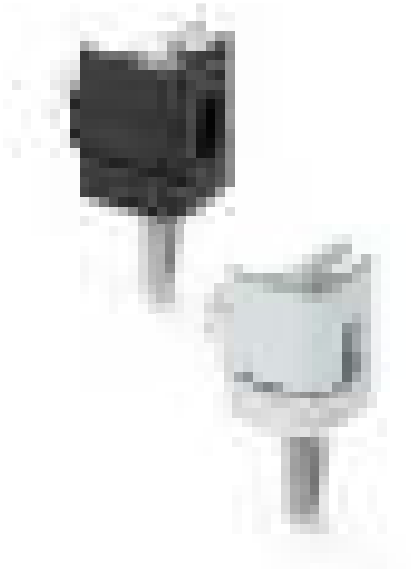

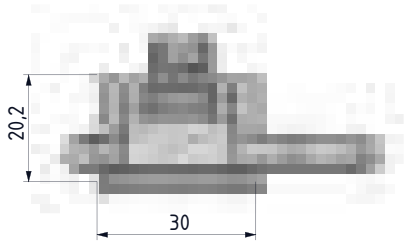

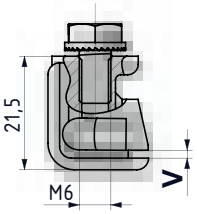

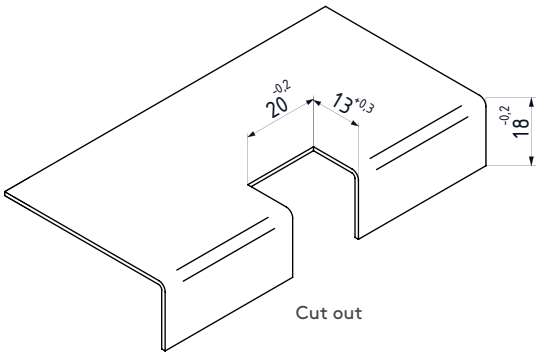

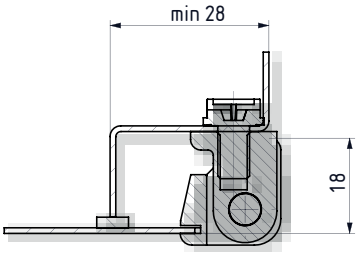

- **Stainless steel version: page 493**
- Corner hinge
- Suitable for steel panels with a thickness of between 1.0 mm - 2.2 mm and 2.5 mm
- Hinge pin available in three types

MATERIAL
FIXED, MOVABLE PARTS:
Zamak DIN-EN 1774-ZnAl4Cu1
PIN: Steel or poliasetal (Delrin)

FINISH
Chrome plated or black coated

Hinge Rotation Angle



V:15

1.0 mm - 1.2 mm door plate thickness
(097 M-F-P-15)

V:22

1.5 mm - 2 mm door plate thickness
(097 M-F-P-22)

V:25

2 mm - 2.5 mm door plate thickness
(097 M-F-P-25)

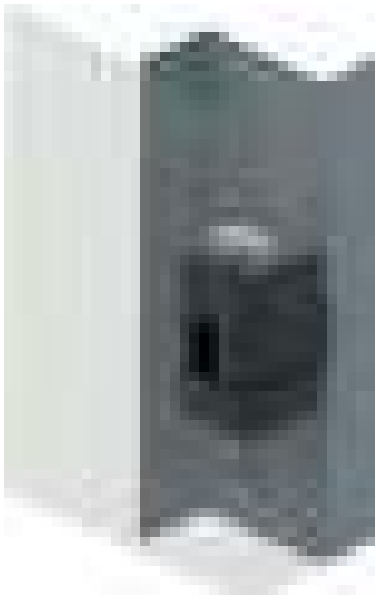

P:1 **P:2** **P:3**

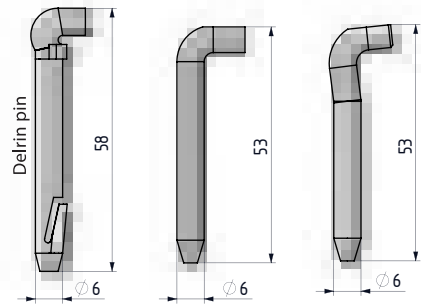

MATERIAL	M	FINISH	F
Zamak	1	Chrome plated	1
		Black coated	2

Group Code	Material	Finish	Pin	Version
097	1	F	P	V

tel | +90 212 721 44 44 fax | +90 212 721 44 45

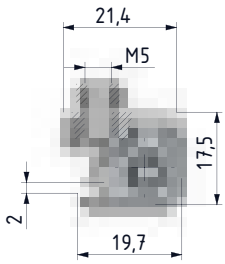

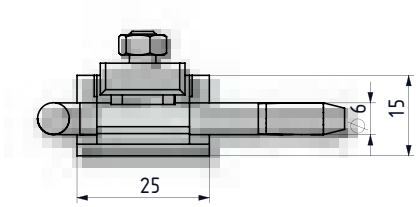

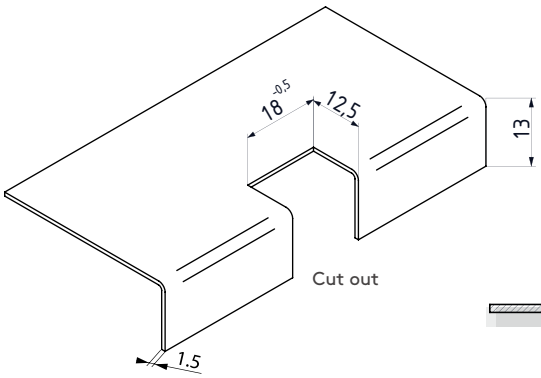

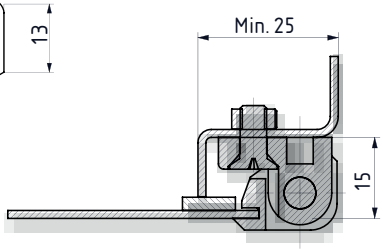

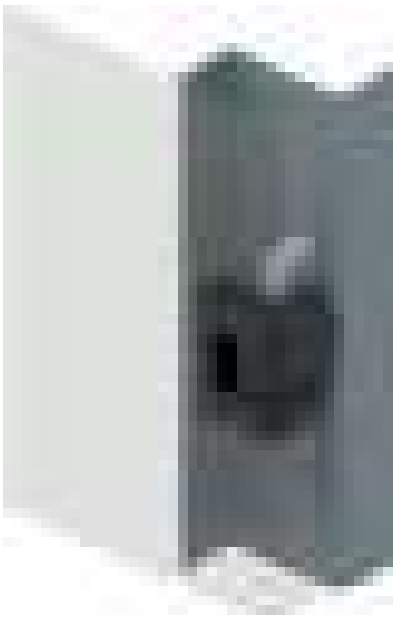

197 CORNER HINGE

RoHS

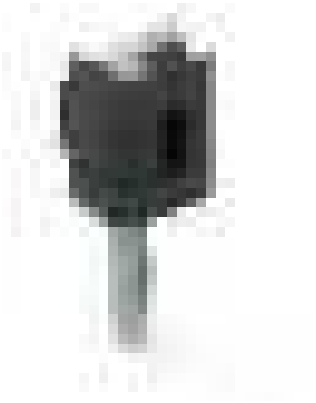

- Corner hinge. Suitable for steel panels with a thickness of between 0.8 mm - 1.5 mm
- Hinge pin available in three types

MATERIAL

BODY: Polyamide PA6 GFR 30
PIN: Steel or poliasetal (Delrin)

Hinge Rotation Angle



P:1 P:2 P:3

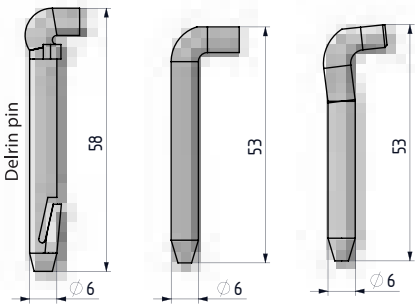

MATERIAL	M	FINISH	F
Plastic	2	No finish	0

Group Code	Material	Finish	Pin
197	2	0	P

CORNER HINGE

297

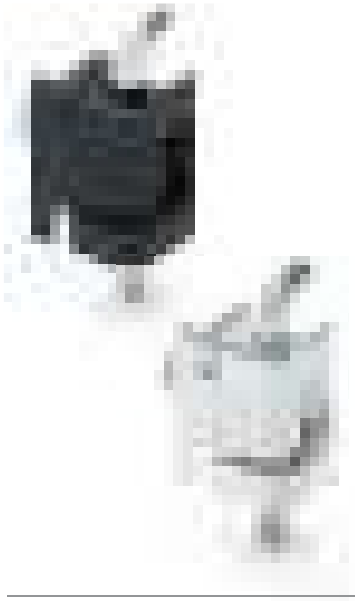

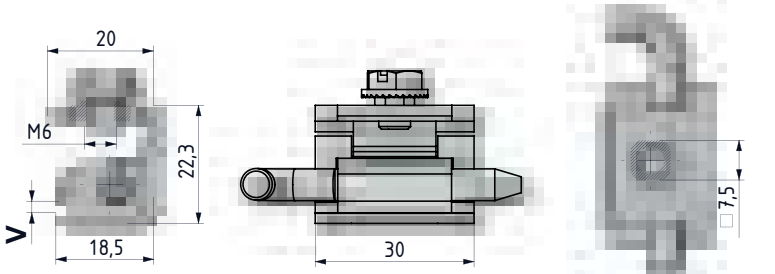

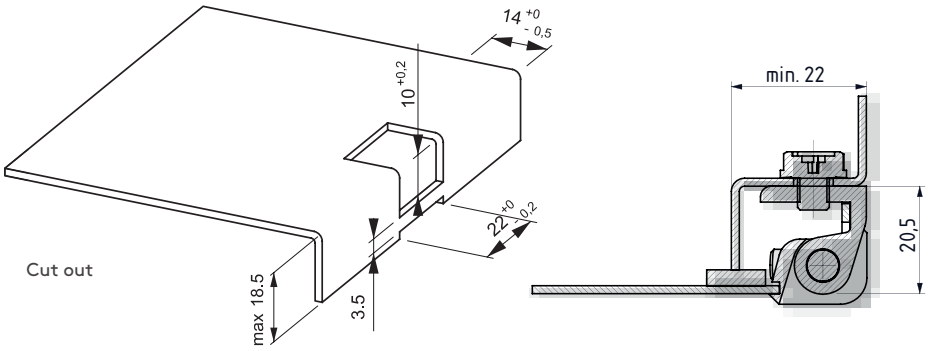

- Corner hinge. Cut out helps provide greater resistance than 097 hinge
- Suitable for steel panels with a thickness of between 1.0 mm and 1.5 mm
- Hinge pin available in three types

MATERIAL
FIXED, MOVABLE PARTS:
Zamak DIN-EN 1774-ZnAl4Cu1
PIN: Steel or poliasetal (Delrin)

FINISH
Chrome plated or black coated

Hinge Rotation Angle



V:15

1.0 mm - 1.2 mm door plate thickness
(297 M-F-P-15)

V:22

1.5 mm door plate thickness
(297 M-F-P-22)

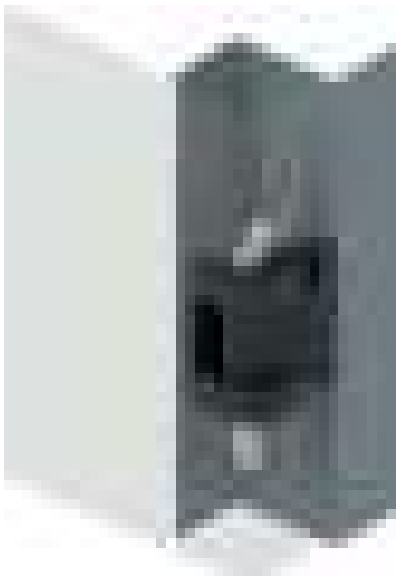

P:1 **P:2** **P:3**

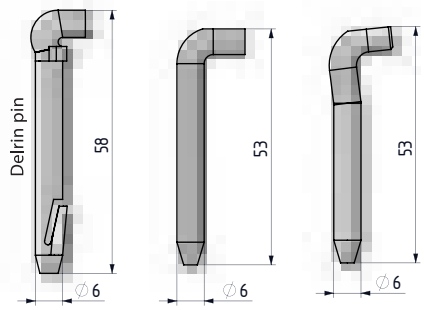

MATERIAL	M	FINISH	F
Zamak	1	Chrome plated	1
		Black coated	2

Group Code	Material	Finish	Pin	Version
297	1	F	P	V

tel | +90 212 721 44 44 fax | +90 212 721 44 45

397 CORNER HINGE

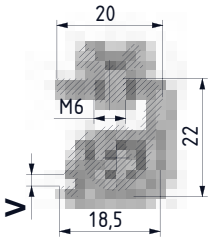

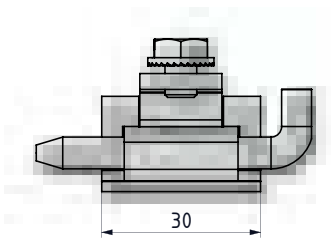

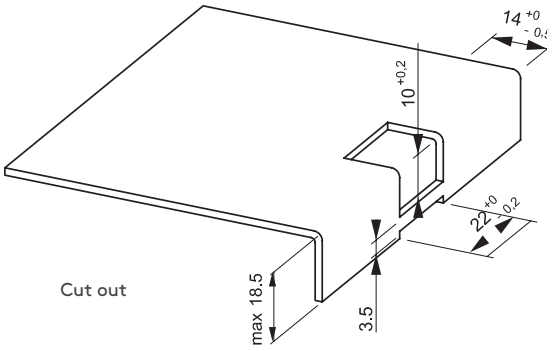

V:15

1.0 mm - 1.2 mm door plate thickness
(397 M-F-P-15)

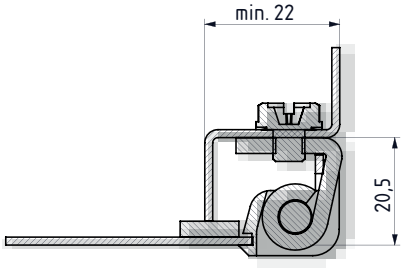

V:22

1.5 mm door plate thickness
(397 M-F-P-22)

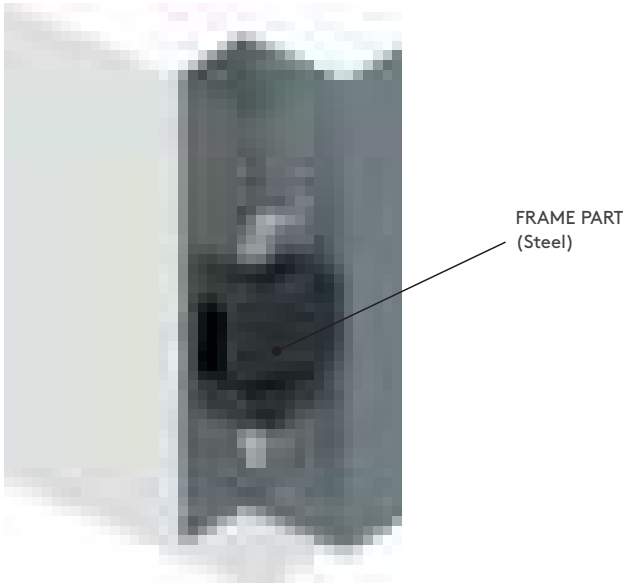

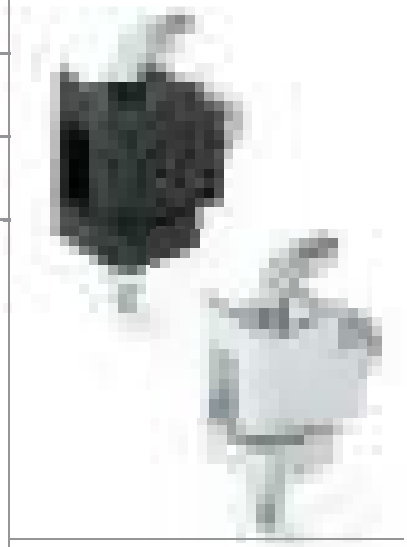

- Corner hinge. Cut out helps provide greater resistance than 097 hinge.
- Steel frame part provides higher strength
- Suitable for steel panels with a thickness of between 1.0 mm and 1.5 mm
- Hinge pin available in four types

MATERIAL
BODY: Zamak DIN-EN 1774-ZnAl4Cu1
FRAME PART: Steel

FINISH
Chrome plated or black coated

Hinge Rotation Angle



P:1

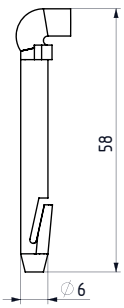

P:2

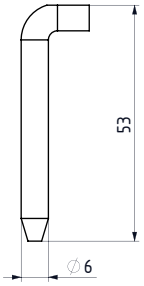

P:3

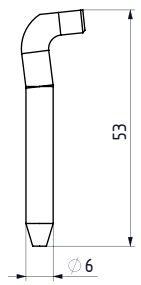

P:4

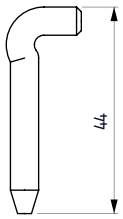

MATERIAL	M	FINISH	F
Zamak	1	Chrome plated	1
		Black coated	2

Group Code	Material	Finish	Pin	Version
397	1	F	P	V

CORNER HINGE

298



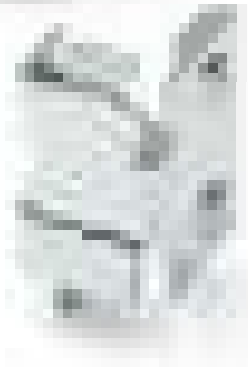

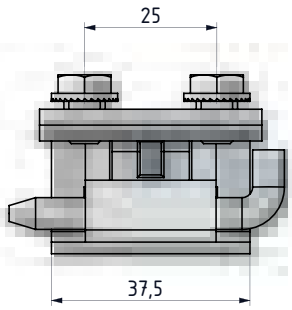

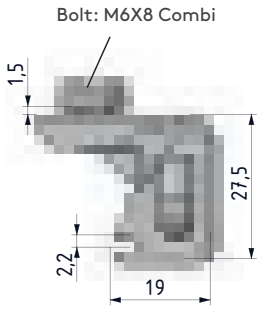

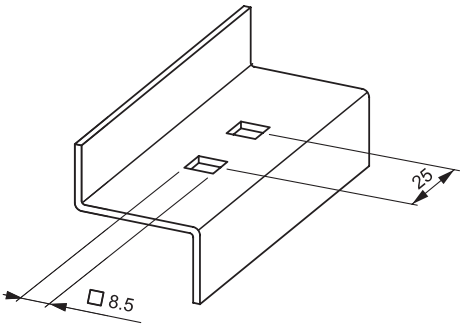

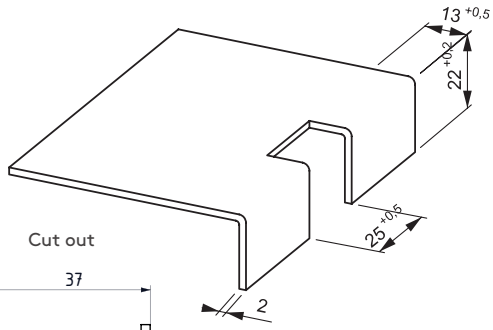

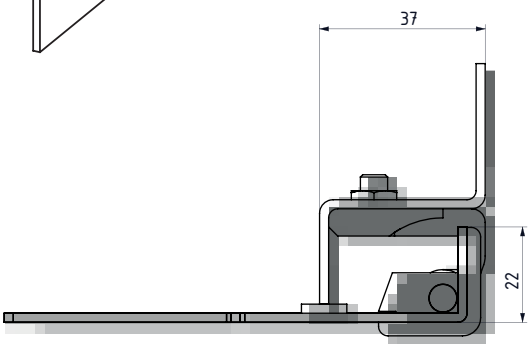

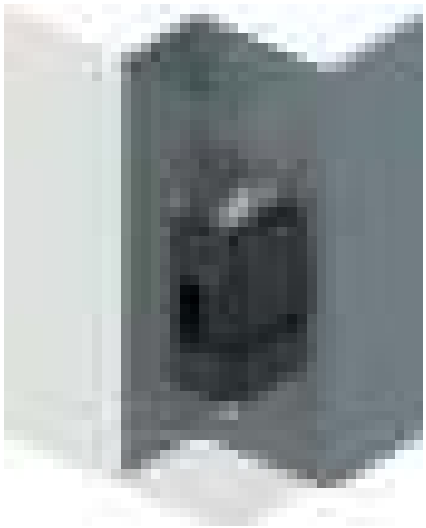

- Corner hinge. Suitable for steel panels with a thickness of between 1.5 mm and 2 mm
- Steel hinge pin
- With M6 threaded studs for internal fastening

MATERIAL
BODY: Zamak DIN-EN 1774-ZnAl4Cu1
PIN: Steel

FINISH
Chrome plated or black coated

Hinge Rotation Angle

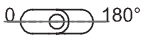

P:2

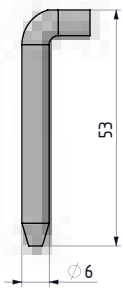

MATERIAL	M	FINISH	F
Zamak	1	Chrome plated	1
		Black coated	2

Group Code	Material	Finish	Pin
298	1	F	2

tel | +90 212 721 44 44 fax | +90 212 721 44 45

098 CORNER HINGE

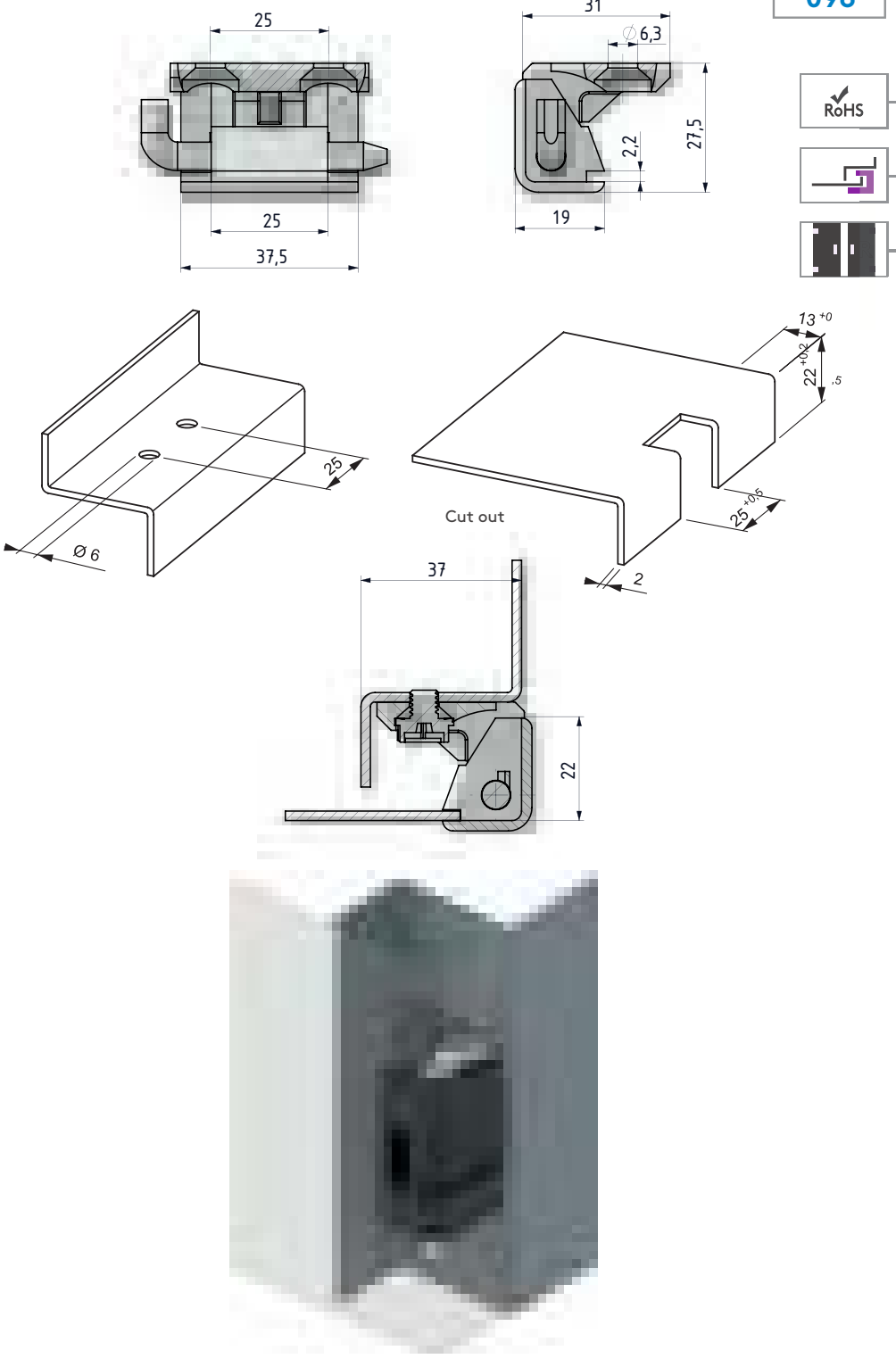

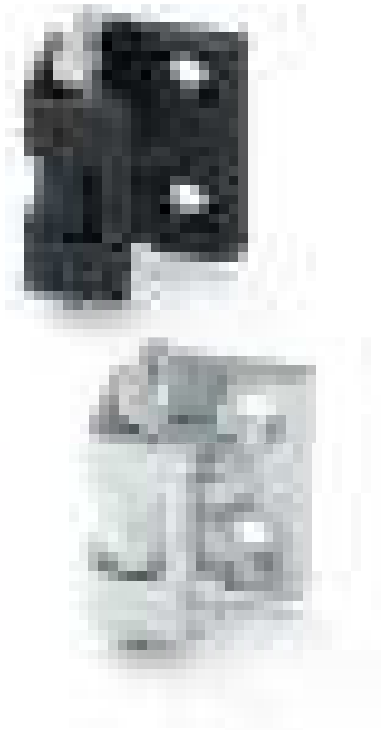

- Suitable for steel panels with a thickness of between 1.5 mm and 2 mm
- Steel hinge pin

MATERIAL
BODY: Zamak DIN-EN 1774-ZnAl4Cu1
PIN: Steel

FINISH
Chrome plated or black coated

Note: Bolts are not supplied

Hinge Rotation Angle

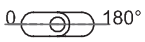

P:2

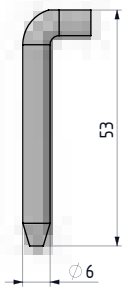

MATERIAL	M	FINISH	F
Zamak	1	Chrome plated	1
		Black coated	2

Group Code	Material	Finish	Pin
098	1	F	2

CORNER HINGES

CORNER HINGE

398

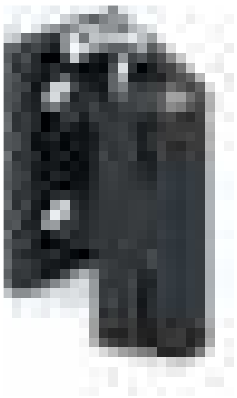

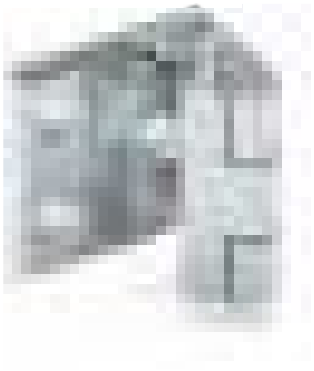

- Left and right versions available
- Maximum opening angle 180°
- Special cut out is necessary for cabinet door
- Stainless steel spacers are used between the hinge parts
- Suitable for 25 mm door bend cabinets

MATERIAL
BODY: Zamak DIN-EN 1774-ZnAl4Cu1
PIN: Steel

FINISH
Chrome plated or black coated

Hinge Rotation Angle



Note: Bolts are not supplied

V:1

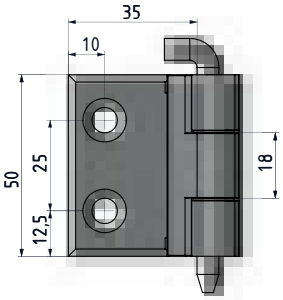

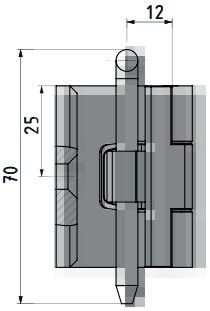

V:2

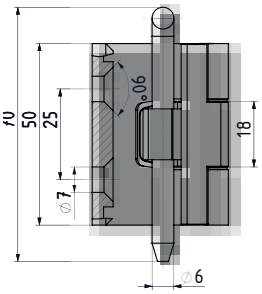

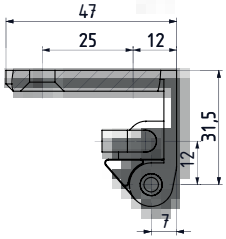

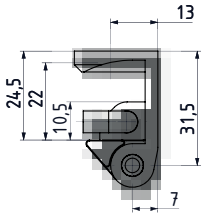

Mounting dimensions

1.5 mm = 13 mm
2.0 mm = 15 mm

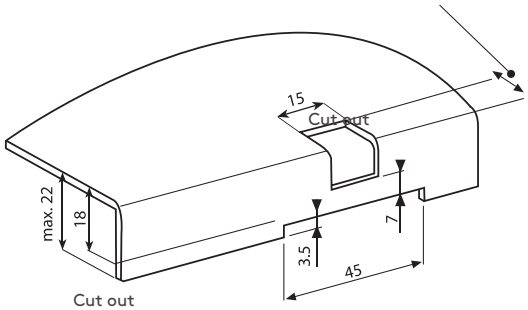

Cut out

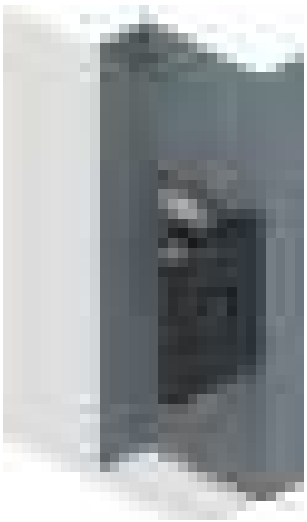

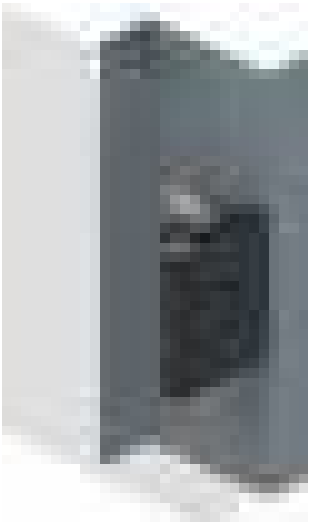

MATERIAL	M	FINISH	F
Zamak	1	Chrome plated	1
		Black coated	2

Group Code	Material	Finish	Version
398	1	F	V

tel | +90 212 721 44 44 fax | +90 212 721 44 45

497 CORNER HINGE

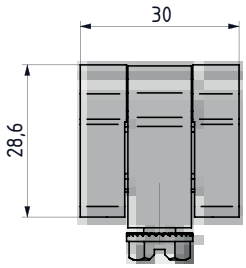

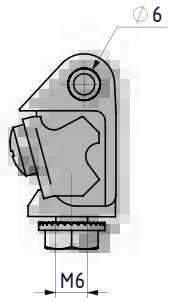

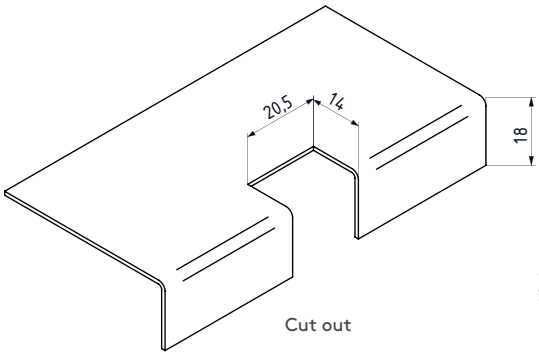

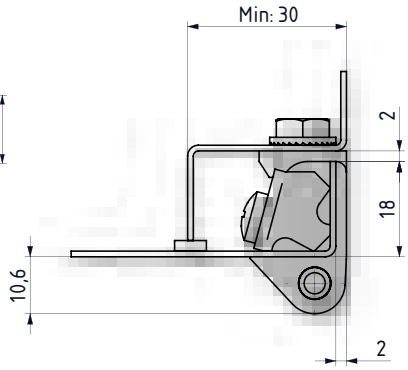

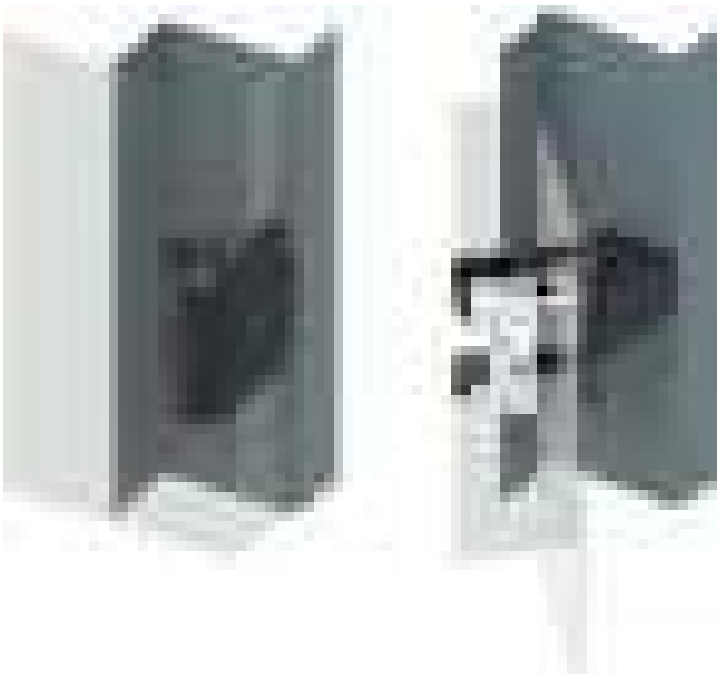

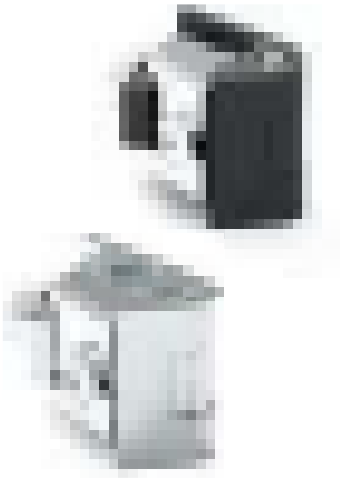

- Corner hinge
- Grounding is possible

MATERIAL
DOOR PART: Zamak DIN-EN 1774-ZnAl4Cu1
FRAME PART: Zamak DIN-EN 1774-ZnAl4Cu1
FIXING BRACKET: Steel

FINISH
Chrome plated or black coated

Hinge Rotation Angle



Note: Bolts are supplied

MATERIAL	M	FINISH	F
Zamak	1	Chrome plated	1
		Black coated	2

Group Code	Material	Finish
497	1	F

Note: The listing of this/these product(s) in the catalogue does not constitute an offer to sell any of those products in Germany

CORNER HINGES

CORNER HINGE

498

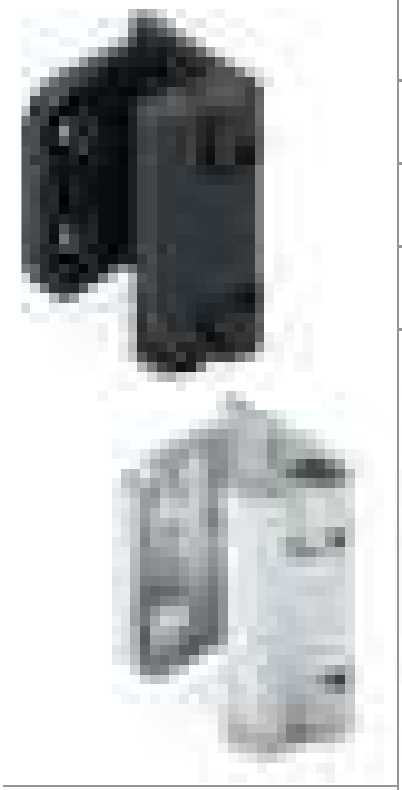

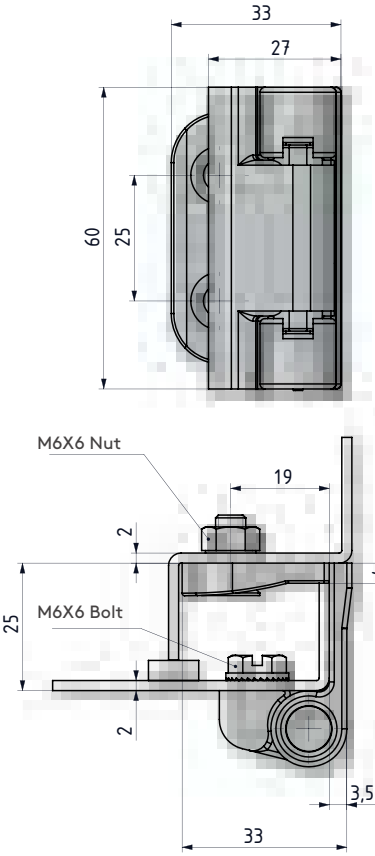

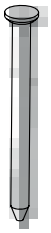

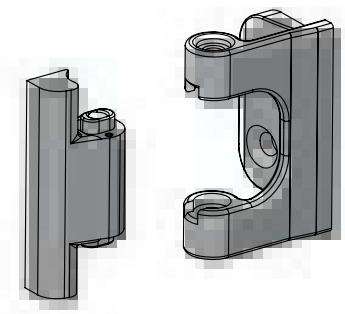

- Door can be removed when opened at 90° by withdrawing pin
- Suitable for 25 mm door bends

MATERIAL

BODY: Zamak DIN-EN 1774-ZnAl4Cu1

PIN: Plastic

FINISH

Chrome plated or black coated

Hinge Rotation Angle

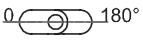

Note: Bolts are not supplied



MATERIAL	M	FINISH	F
Zamak	1	Chrome plated	1
		Black coated	2

Group Code	Material	Finish
498	1	F

tel | +90 212 721 44 44 fax | +90 212 721 44 45

400 CORNER HINGE

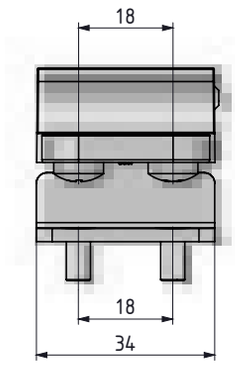

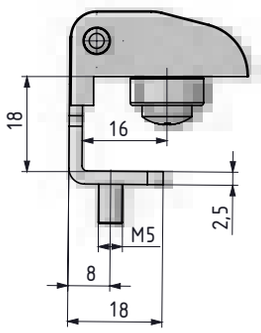

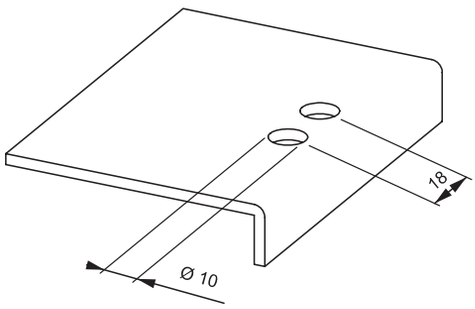

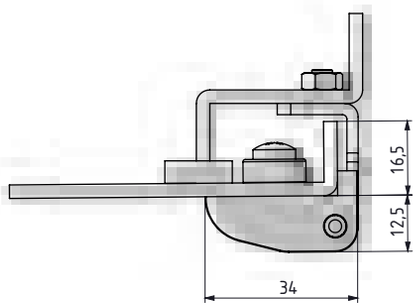

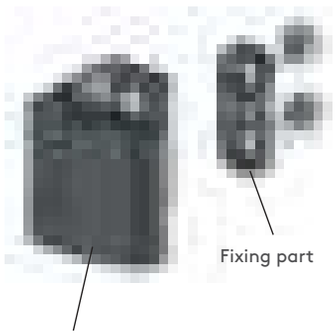





- For fitting to corner of doors with 16.5 mm bend
- M5 stud version available. Polyamide mounting supplied for fixing body.
- Budget-priced, polyamide version available

MATERIAL

BODY :	Zamak DIN-EN 1774-ZnAl4Cu1 or PA6 GFR 30
FIXED PART:	Steel
PIN:	Steel

FINISH
Black coated

MATERIAL	M	FINISH	F
Zamak	1	Black coated	2
Plastic	2	No finish	0

Group Code	Material	Finish	Version	Option
400	M	F	18	1

Hinge Rotation Angle



CORNER HINGE 200

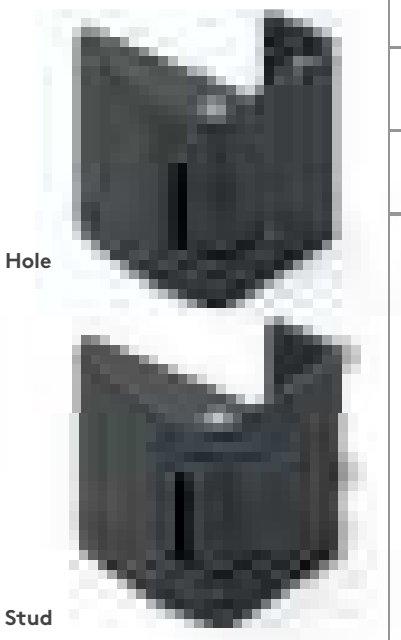

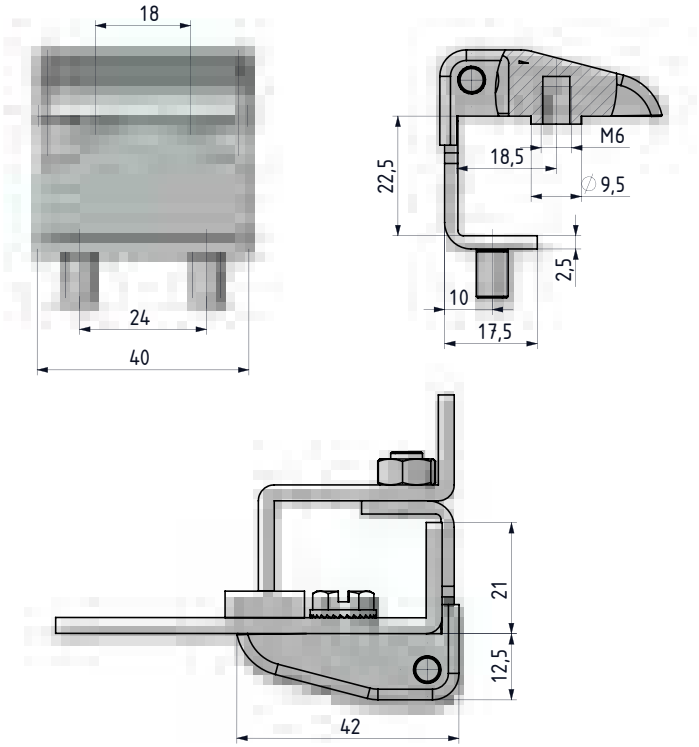

- For fitting to corner of doors with 21 mm bend
- Stud version available, using M6 studs

MATERIAL

BODY:	Zamak DIN-EN 1774-ZnAl4Cu1
FRAME PART:	Steel
PIN:	Steel

FINISH
Black coated



Hinge Rotation Angle



MATERIAL	M	FINISH	F
Zamak	1	Black coated	2

Group Code	Material	Finish	Version	Option
200	1	2	17	OP

OPTION	OP
Hole	0
Stud	1

tel | +90 212 721 44 44 fax | +90 212 721 44 45

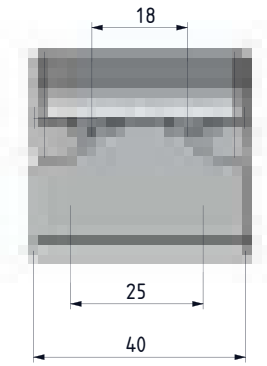

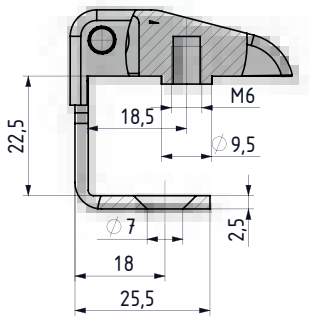

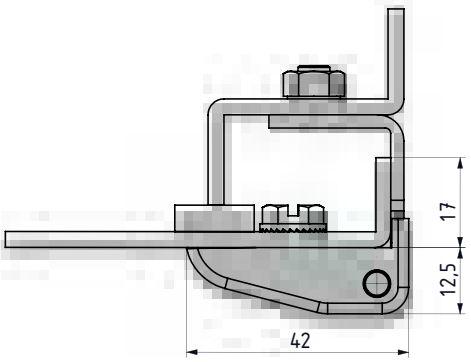



200 CORNER HINGE

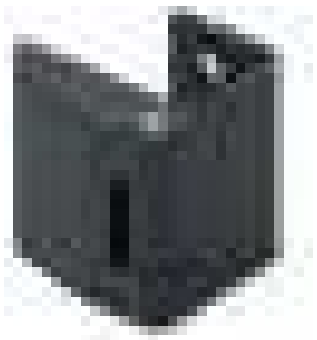

MATERIAL

BODY:	Zamak DIN-EN 1774-ZnAl4Cu1
FRAME PART:	Steel
PIN:	Steel

FINISH
Black coated

MATERIAL	M	FINISH	F
Zamak	1	Black coated	2

Group Code	Material	Finish	Version	Option
200	1	2	25	0

OPSİYON	OP
Hole	0

Hinge Rotation Angle

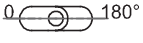

Note: Bolts are not supplied

CORNER HINGE

100



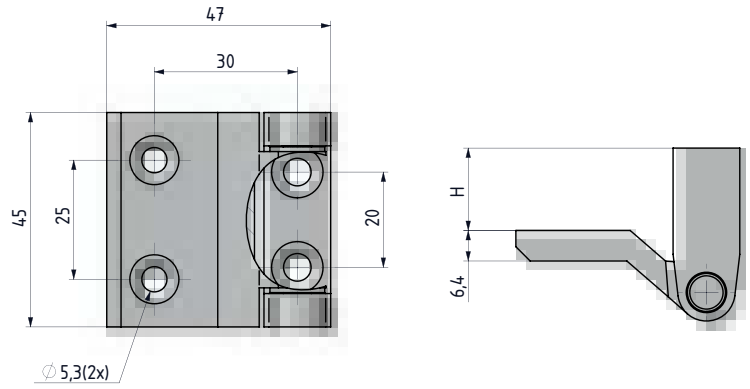

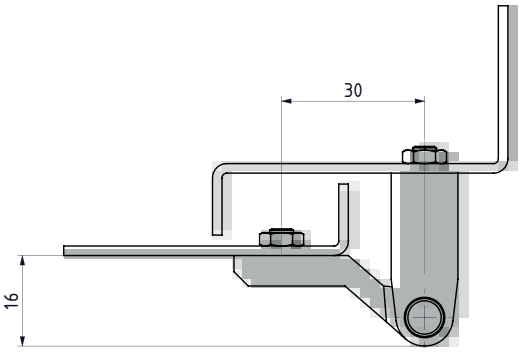

- Designed for plain/flush-mounted and side-mounted doors
- For side-mounted doors with a bend between 0 mm and 30 mm
- Hardened steel hinge pin

MATERIAL

BODY:	Zamak DIN-EN 1774-ZnAl4Cu1
PIN:	Steel
BEARING:	Delrin

FINISH
Black coated

H
00
02
03
05
07
10
15
17
20
25
27
30



Hinge Rotation Angle



Note: Bolts are not supplied

MATERIAL	M	FINISH	F
Zamak	1	Chrome plated	1
		Black coated	2

Group Code	Material	Finish	Height
100	1	F	H

tel | +90 212 721 44 44 fax | +90 212 721 44 45

600 CORNER HINGE

V:3

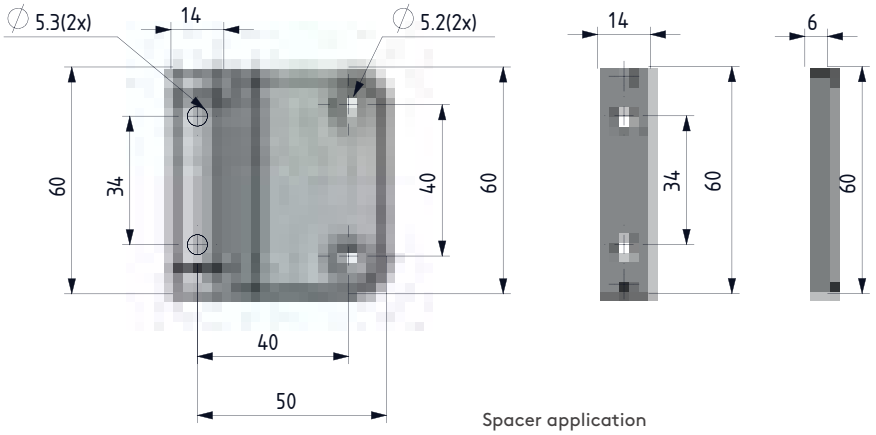

Spacer application
600 1-2-H-3

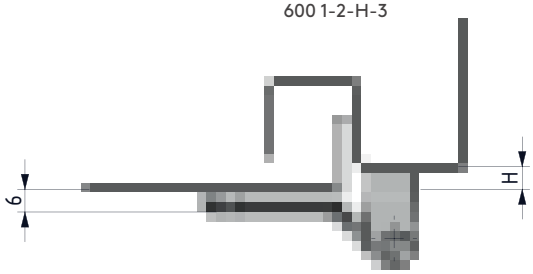

H
00
06
12
18





- **Stainless steel version: page 498**
- For side-mounted doors with a bend of 0-18 mm
- Pin and plastic guides supplied separately

MATERIAL

BODY:	Zamak DIN-EN 1774-ZnAl4Cu1
PIN:	Steel
BEARING:	Delrin

FINISH
Black coated

MATERIAL	M	FINISH	F
Zamak	1	Black coated	2

Group Code	Material	Finish	Height	Version
600	1	2	H	3

Hinge Rotation Angle



Note: Bolts are not supplied

CORNER HINGES

HVAC HINGE (2D)

600

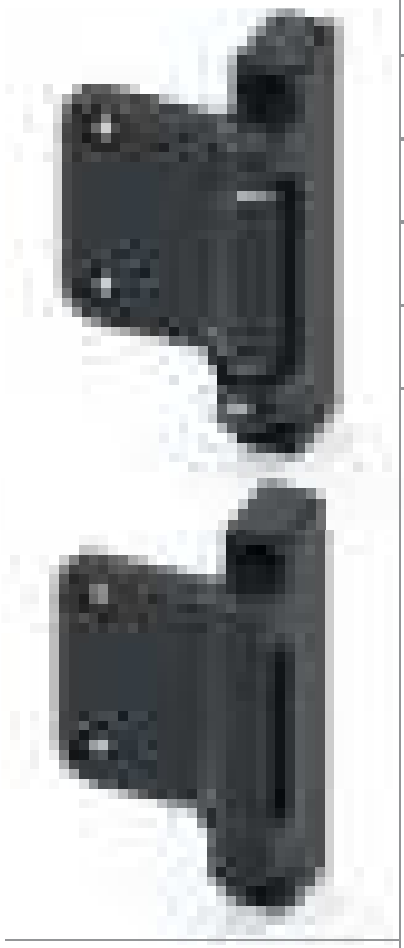

- Hinge supplied pre-assembled to decrease labour costs
- Two-dimensional door adjustments possible
- Axial adjustment is ± 2 mm. Radial adjustment is ± 1 mm

MATERIAL

BODY:	Zamak DIN-EN 1774-ZnAl4Cu1
PIN:	Steel
BEARING:	Delrin

FINISH
Black coated

Hinge Rotation Angle



Note: Bolts are not supplied

V:1

2D Adjustable

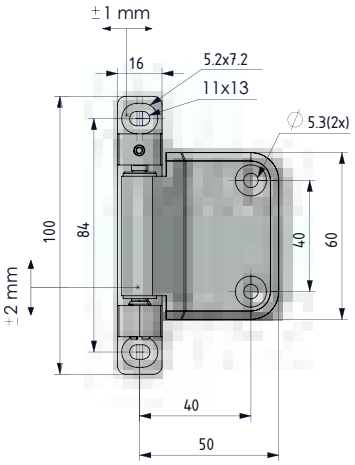

V:2

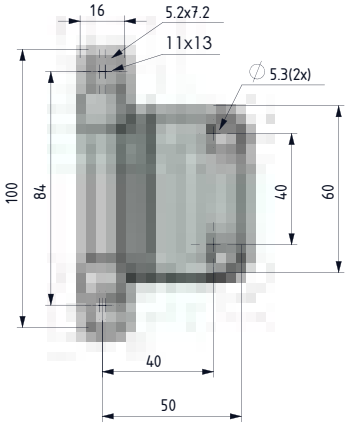

H
00
03
05
10
15

Spacer application

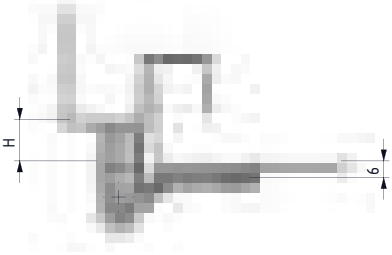

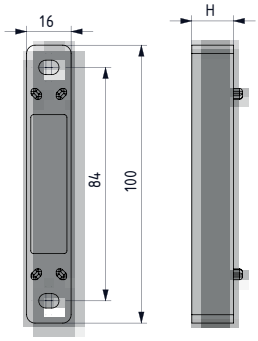

Spacer





MATERIAL	M	FINISH	F
Zamak	1	Black coated	2

DOOR DIRECTION	
Right hand	001
Left hand	002

Group Code	Material	Finish	Height	Version	Door Direction
600	1	2	H	V	

tel | +90 212 721 44 44 fax | +90 212 721 44 45

700 HVAC HINGE (2D)

V:1

2D Adjustable

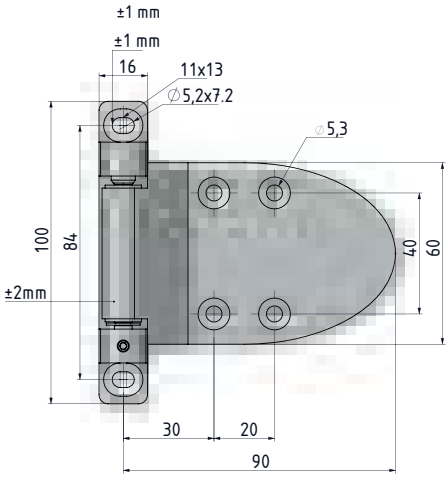

V:2

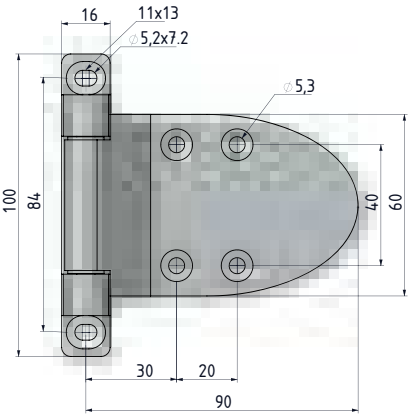

Spacer application

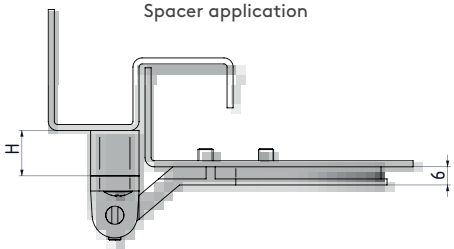



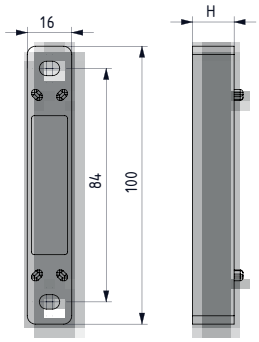

Spacer

H
00
02
07
12







- Hinge supplied pre-assembled to decrease labour costs
- Two-dimensional door adjustments possible
- Axial adjustment is ± 2 mm. Radial adjustment is ± 1 mm

MATERIAL

BODY: Zamak DIN-EN 1774-ZnAl4Cu1
PIN: Steel
BEARING: Delrin

FINISH

Black coated

MATERIAL	M	FINISH	F
Zamak	1	Black coated	2

DOOR DIRECTION	
Right hand	001
Left hand	002

Hinge Rotation Angle



Group Code	Material	Finish	Height	Version	Door Direction
700	1	2	H	V	

Note: Bolts are not supplied

FAST FIND INDEX

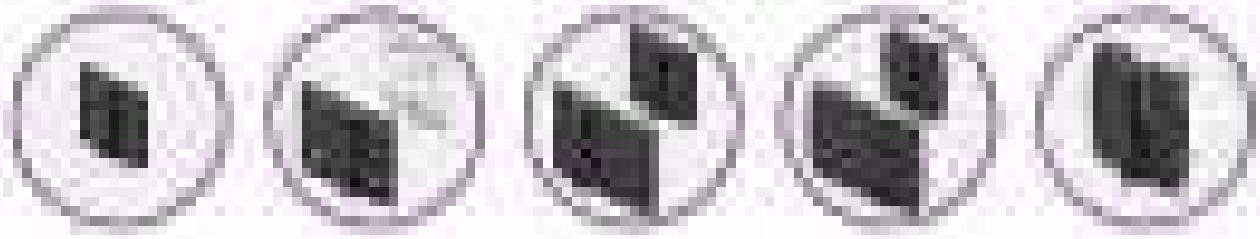

355 356-359 360 361 361

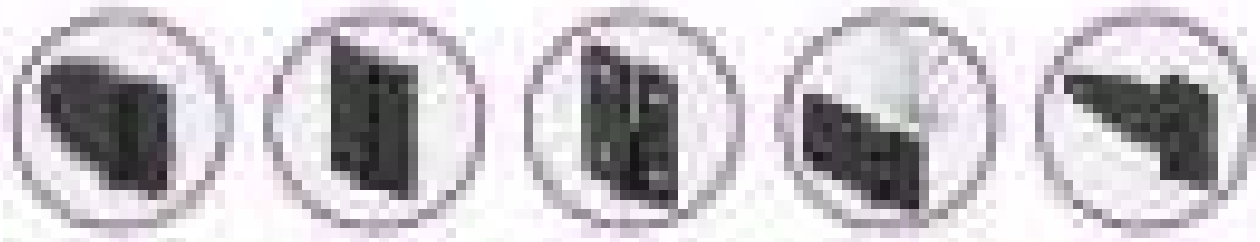

363 364 365 366 367

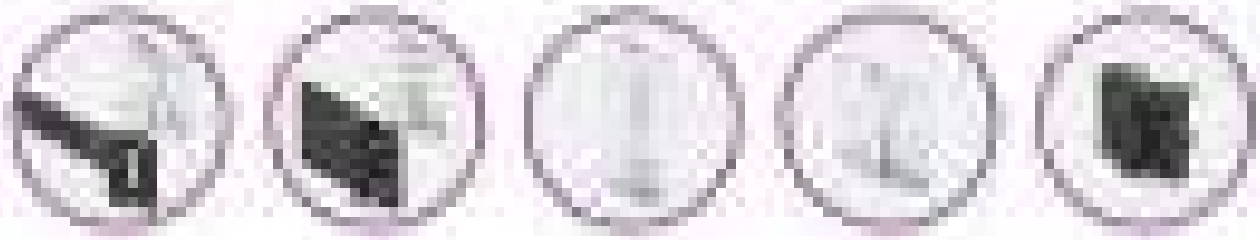

368-369 370 371 372 373

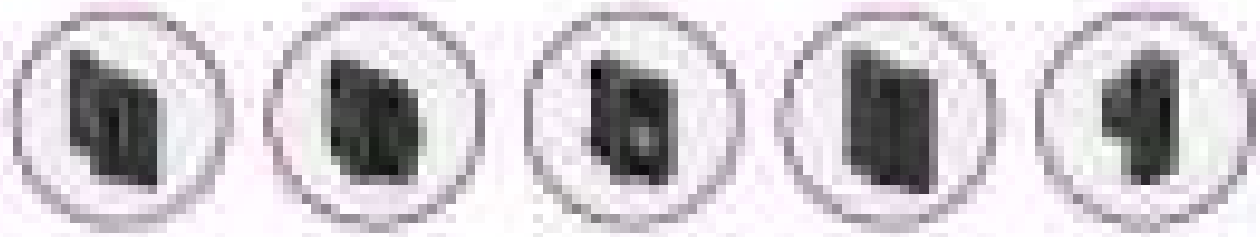

374 375 376-377 378 379

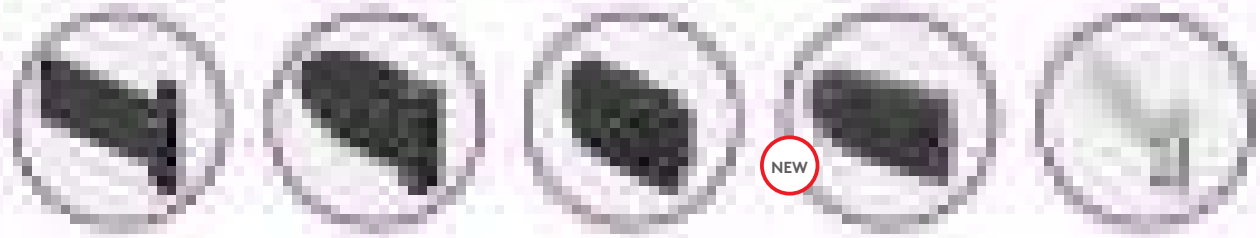

380 381 382 383 384



FLAT HINGES

352-385

mesan
ESSENTRA COMPONENTS

e-mail | info@mesanlocks.com web | www.mesanlocks.com

tel | +90 212 721 44 44 fax | +90 212 721 44 45

1299 MINI LEAF HINGE

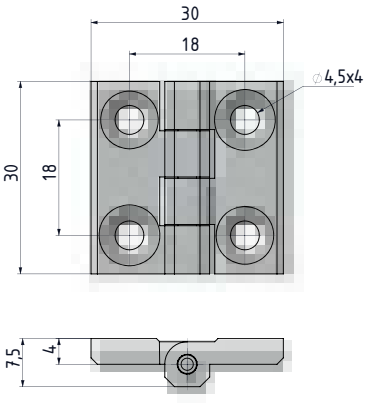



- **Stainless steel version: page 498**
- Generally used for plain/small flush mounted doors.

MATERIAL

BODY: Zamak DIN-EN 1774-ZnAl4Cu1

PIN: Stainless Steel

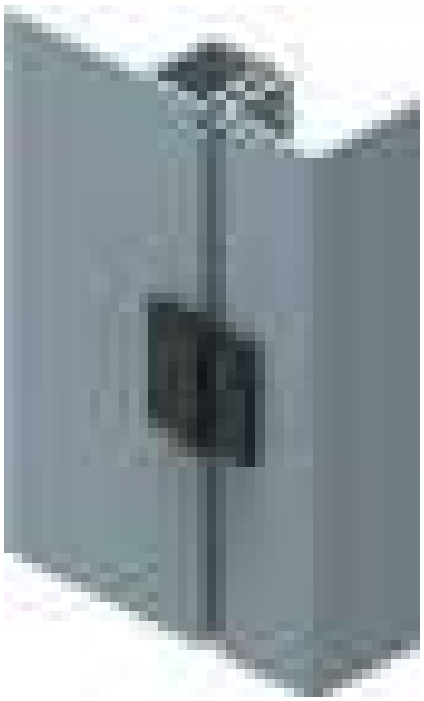

MATERIAL	M	FINISH	F
Zamak	1	Chrome plated	1
		Black coated	2

Group Code	Material	Finish
1299	1	F

LEAF HINGE

299

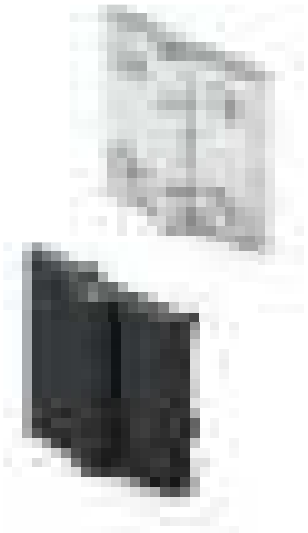

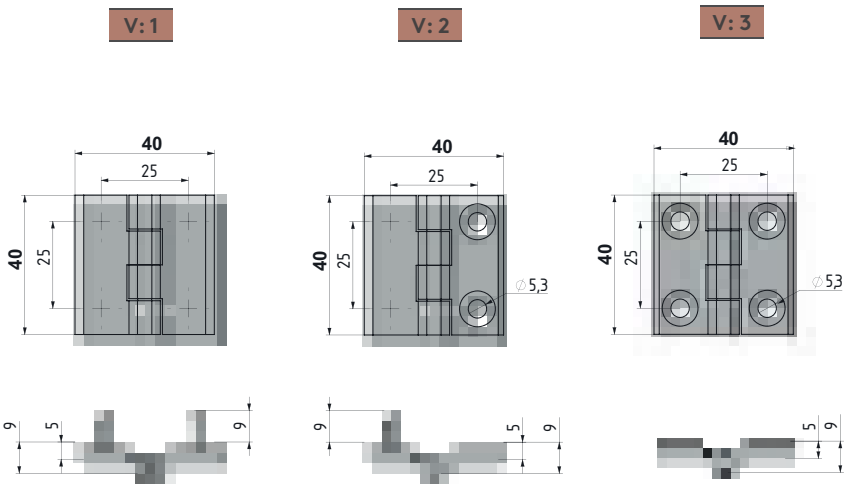

- **Stainless steel version: page 500**
- Generally used for plain/flush mounted doors
- Stud versions fitted with M5 x 8.5 mm threaded stud
- Stainless steel (AISI 304) hinge pin.

MATERIAL

BODY: Zamak DIN-EN 1774-ZnAl4Cu1

PIN: Stainless Steel

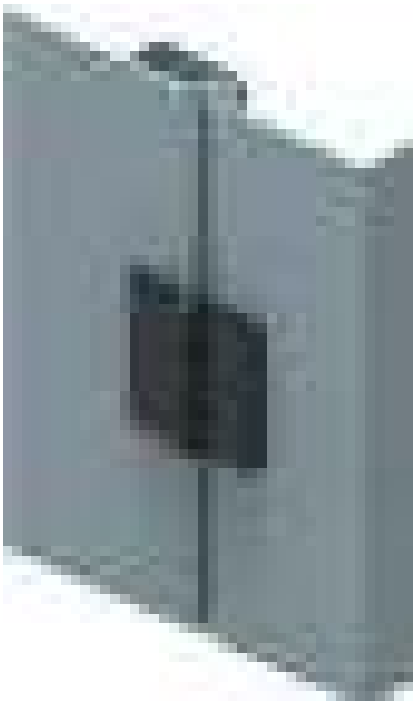

MATERIAL	M	FINISH	F
Zamak	1	Chrome plated	1
		Black coated	2
Plastic	2	No finish	0

Group Code	Material	Finish	Version
299	M	F	V

tel | +90 212 721 44 44 fax | +90 212 721 44 45

199 LEAF HINGE

V: 1 V: 2 V: 3

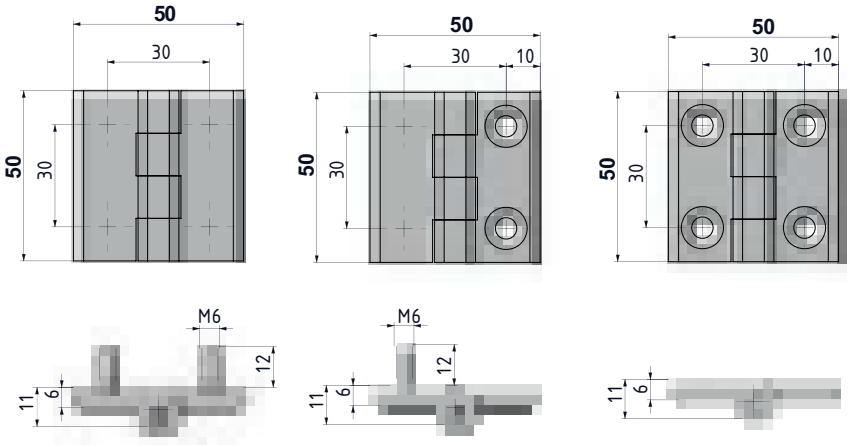

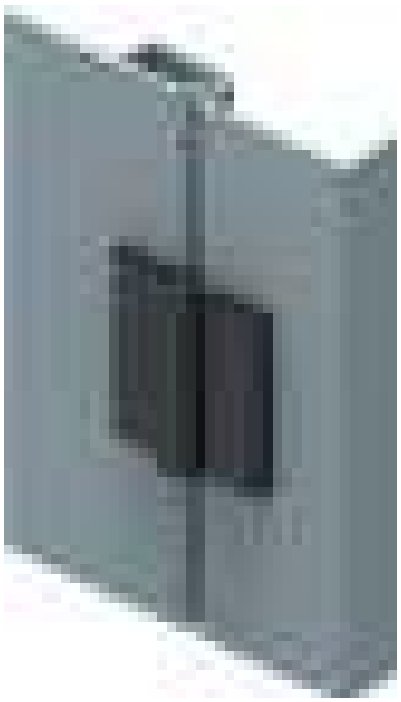

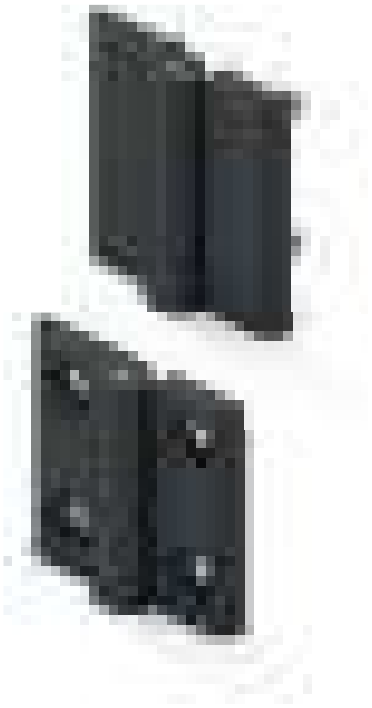

- Generally used for plain/flush-mounted doors
- Stud versions fitted with M6 x 12 mm threaded stud
- Stainless steel (AISI 304) hinge pin.

MATERIAL

BODY: Polyamide DIN-EN ISO 1043-1 PA 6 GFR 30

PIN: Stainless Steel

MATERIAL	M	FINISH	F
Plastic	2	No finish	0

Group Code	Material	Finish	Version
199	2	0	V

LEAF HINGE

099

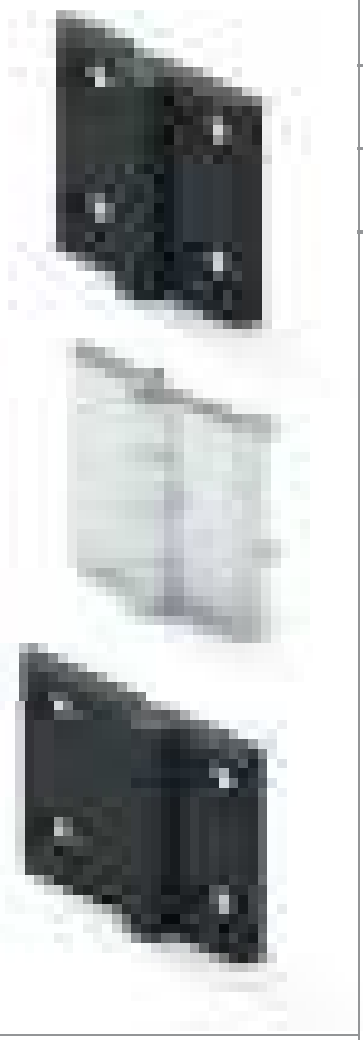

- **Stainless steel version page 500,502**
- Generally used for plain/flush-mounted doors
- Stud versions fitted with M6 x 12 mm threaded stud
- Stainless steel (AISI 304) hinge pin.
- Available in three sizes, hole or stud fixing:
  - 50 mm x 50 mm
  - 50 mm x 63 mm
  - 50 mm x 76 mm

MATERIAL

BODY: Zamak DIN-EN 1774-ZnAl4Cu1

PIN: Stainless Steel

V: 1

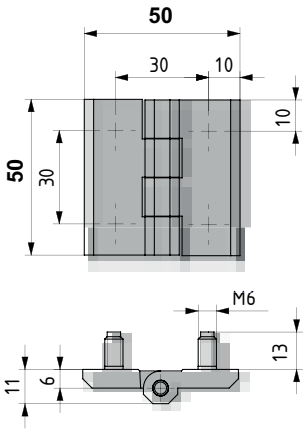

V: 2

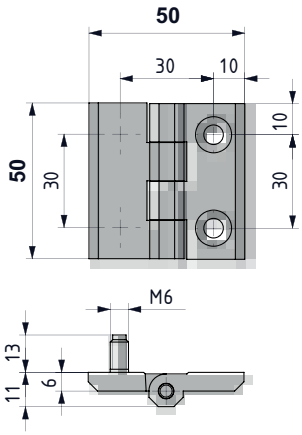

V: 4

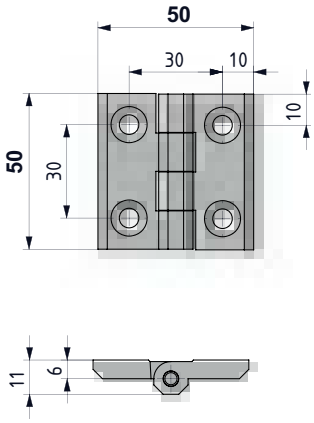

V: 5

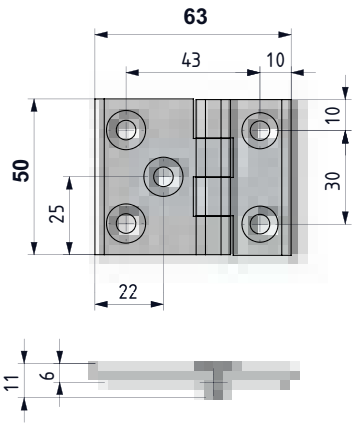

V: 6

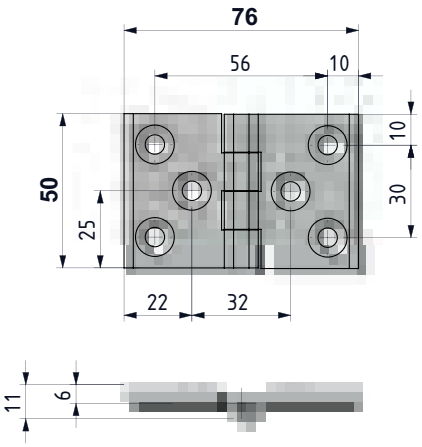

V:7

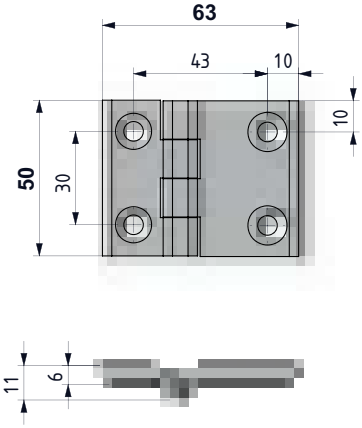

tel | +90 212 721 44 44 fax | +90 212 721 44 45

099 LEAF HINGE

V: 8

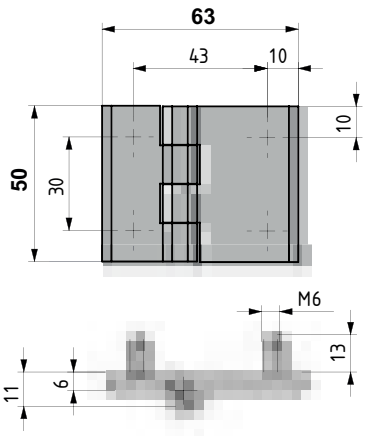

V: 9

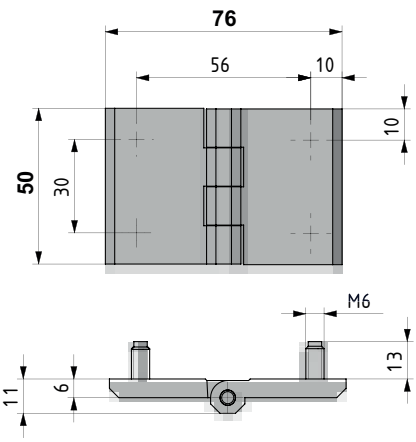

V: 10

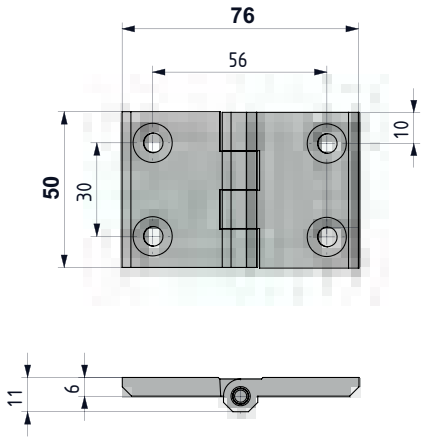



MATERIAL
BODY: Zamak DIN-EN 1774-ZnAl4Cu1
PIN: Stainless Steel

MATERIAL	M	FINISH	F
Zamak	1	Chrome plated	1
		Black coated	2

Group Code	Material	Finish	Version
099	1	F	V

LEAF HINGE

399



- **Stainless steel version page 501,503**
- Generally used for plain/flush-mounted, isolated heavy doors
- Stud versions fitted with M8 x 14 mm threaded stud
- Stainless steel (AISI 304) hinge pin
- Available in three sizes, hole or stud fixing:
  - 60 mm x 60 mm
  - 60 mm x 90 mm
  - 60 mm x 120 mm

MATERIAL

BODY: Zamak DIN-EN 1774-ZnAl4Cu1

PIN: Stainless Steel

V: 1

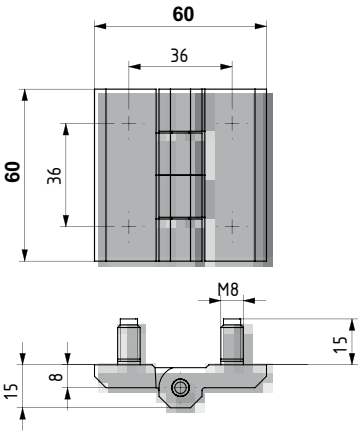

V: 2

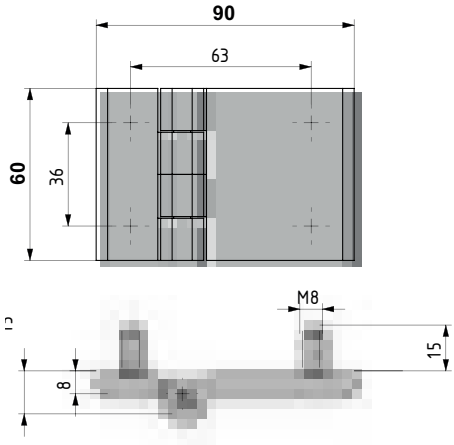

V: 3

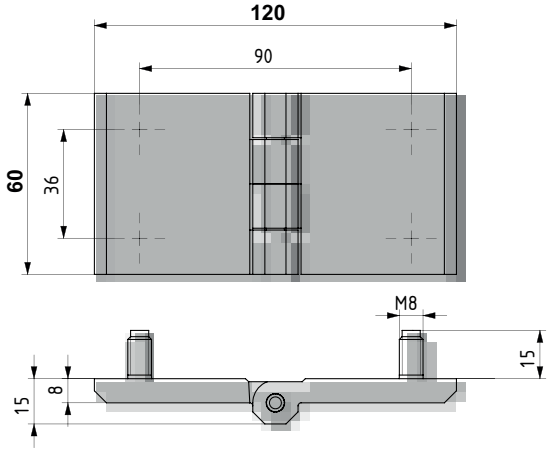

V: 4

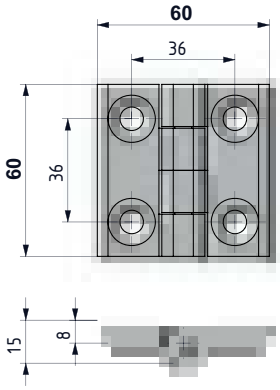

V: 5

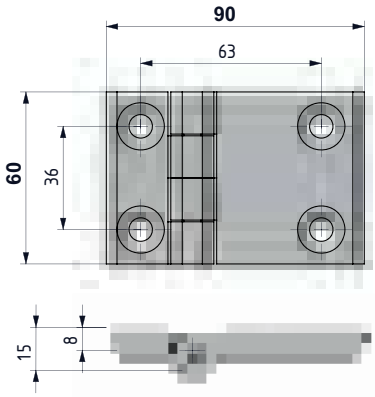

V: 6

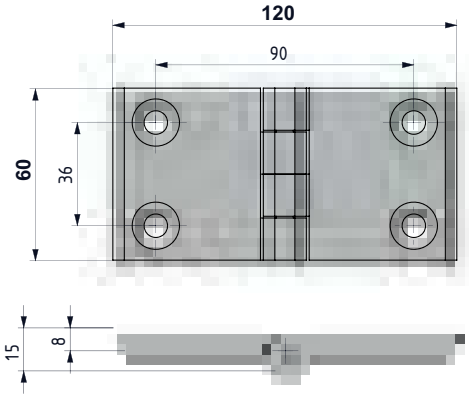

MATERIAL	M	FINISH	F
Zamak	1	Chrome plated	1
		Black coated	2

Group Code	Material	Finish	Version
399	1	F	V

tel | +90 212 721 44 44 fax | +90 212 721 44 45

1399 LEAF HINGE

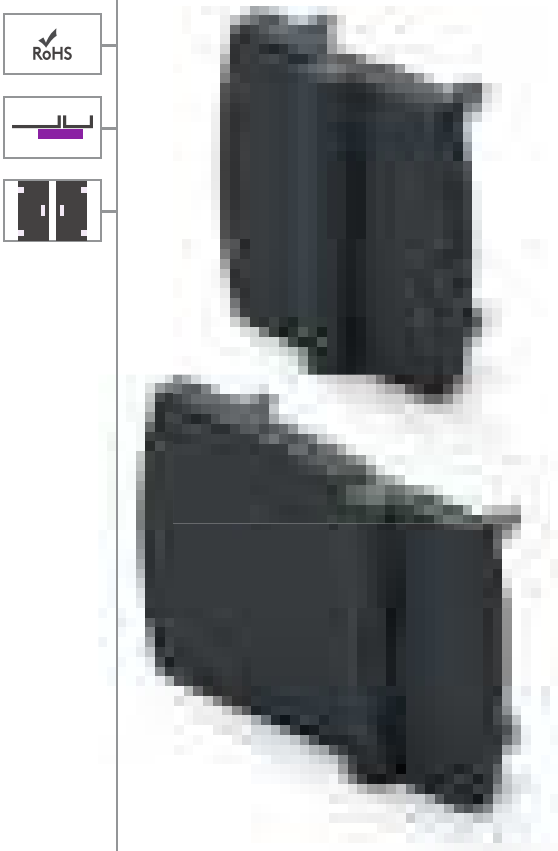

V: 1

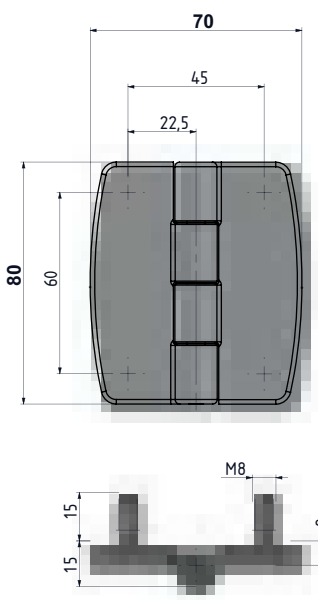

V: 2

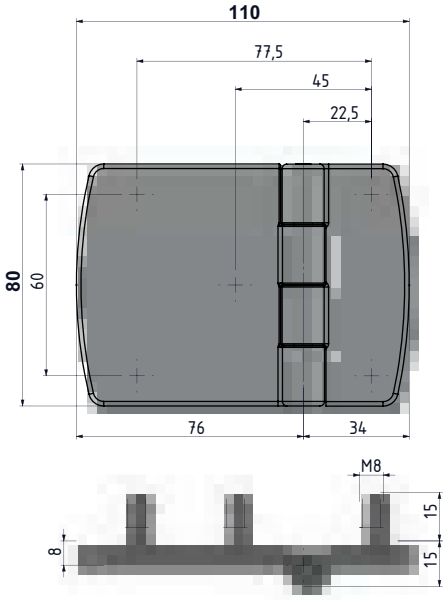

V: 3

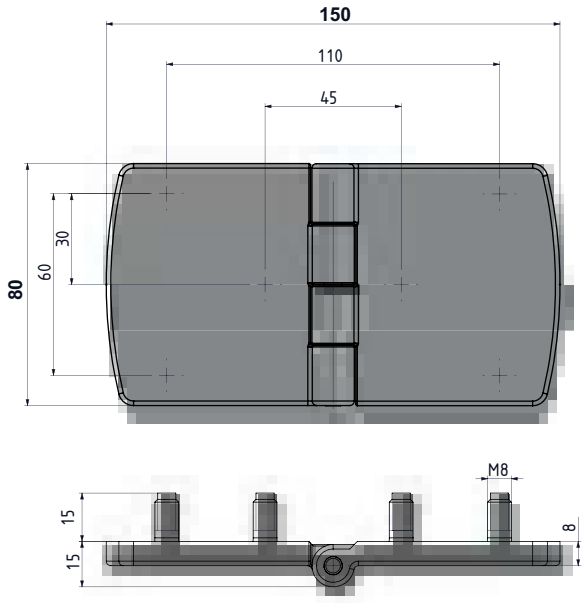

- Generally used for plain / flush-mounted, isolated, heavy doors
- Stud versions fitted with M8 x 14 mm threaded stud
- Stainless steel (AISI 304) hinge pin.
- Available in three sizes, stud fixing:
  - 80 mm x 70 mm
  - 80 mm x 110 mm
  - 80 mm x 150 mm

MATERIAL

BODY: Zamak DIN-EN 1774-ZnAl4Cu1

PIN: Stainless Steel

MATERIAL	M	FINISH	F
Zamak	1	Chrome plated	1
		Black coated	2

Group Code	Material	Finish	Version
1399	1	F	V

LIFT-OFF HINGE

1699



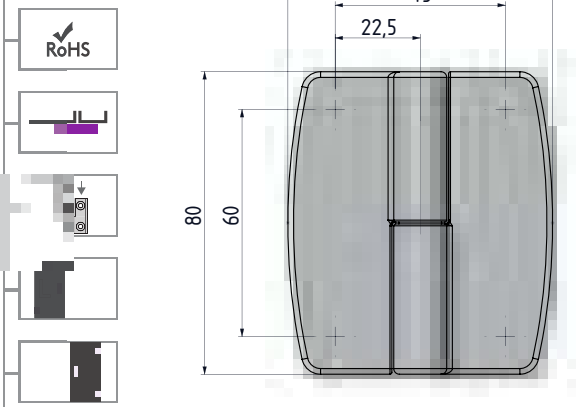

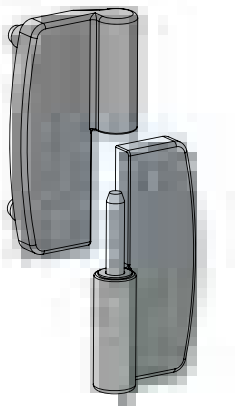

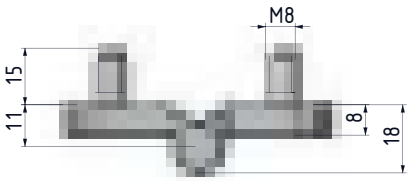



- Concealed mounting-screws prevent external access to hinge
- Designed for plain/flush-mounted doors
- Suitable for left- and right-hand applications

MATERIAL

BODY: Zamak DIN-EN 1774-ZnAl4Cu1
PIN: Stainless Steel

Hinge Rotation Angle

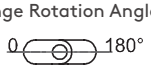

MATERIAL	M	FINISH	F
Zamak	1	Chrome plated	1
		Black coated	2

DOOR DIRECTION	
Right hand	001
Left hand	002

Group Code	Material	Finish	Version	Door Direction
1699	1	F	1	

tel | +90 212 721 44 44 fax | +90 212 721 44 45

1499 LIFT-OFF HINGE

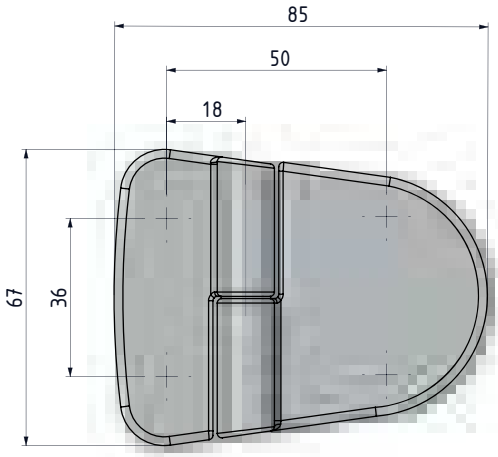

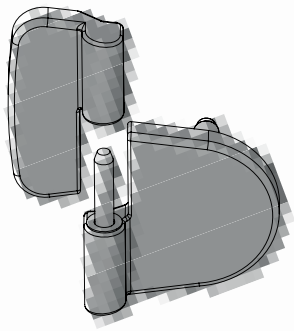

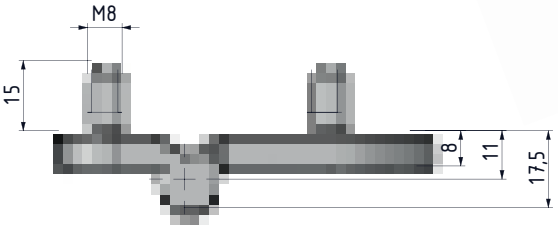

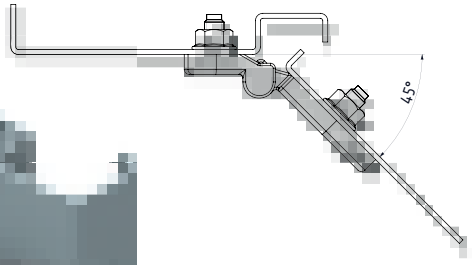

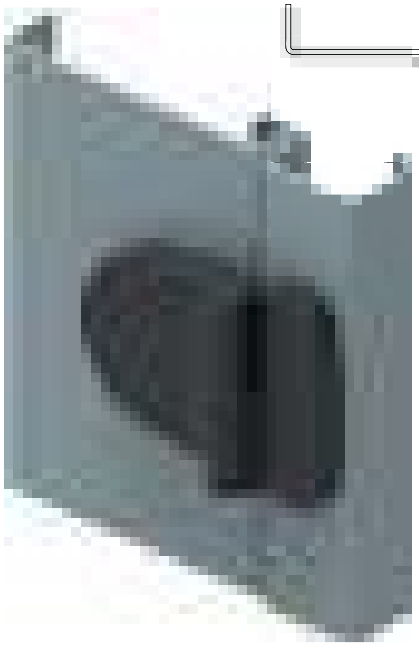



- Concealed mounting screws prevent external access to hinge
- Design for plain/flush-mounted doors
- Suitable for left- and right-hand applications

MATERIAL

BODY: Zamak DIN-EN 1774-ZnAl4Cu1
PIN: Stainless Steel

MATERIAL	M	FINISH	F
Zamak	1	Chrome plated	1
		Black coated	2

DOOR DIRECTION	
Right hand	001
Left hand	002

Group Code	Material	Finish	Door Direction
1499	1	F	

LEAF HINGE 900

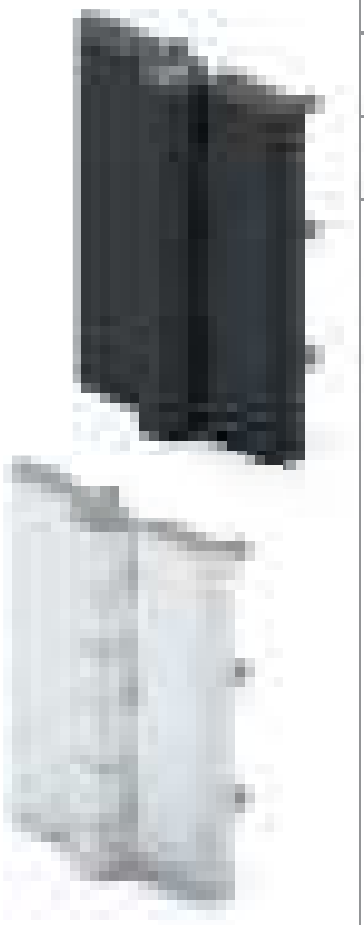

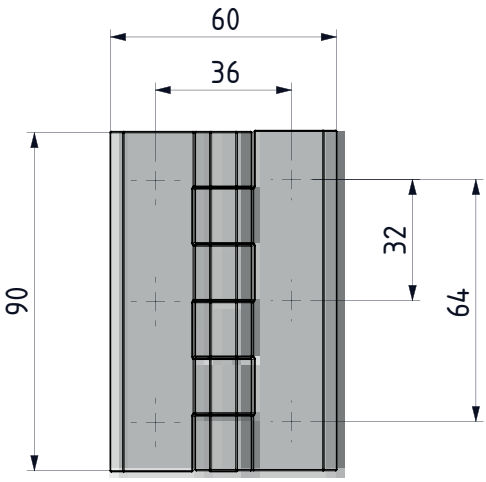

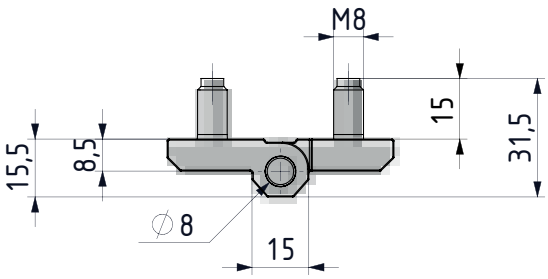



- Generally used for plain/flush-mounted doors and insulated panels
- Provides strong fixing by 6 pcs. M8 bolts
- Opening angle 270°

MATERIAL

BODY:	Zamak DIN-EN 1774-ZnAl4Cu1
PIN:	Stainless Steel
SCREW:	Steel

MATERIAL	M	FINISH	F
Zamak	1	Chrome plated	1
		Black coated	2

Group Code	Material	Finish
900	1	F

tel | +90 212 721 44 44 fax | +90 212 721 44 45

899 LIFT-OFF HINGE

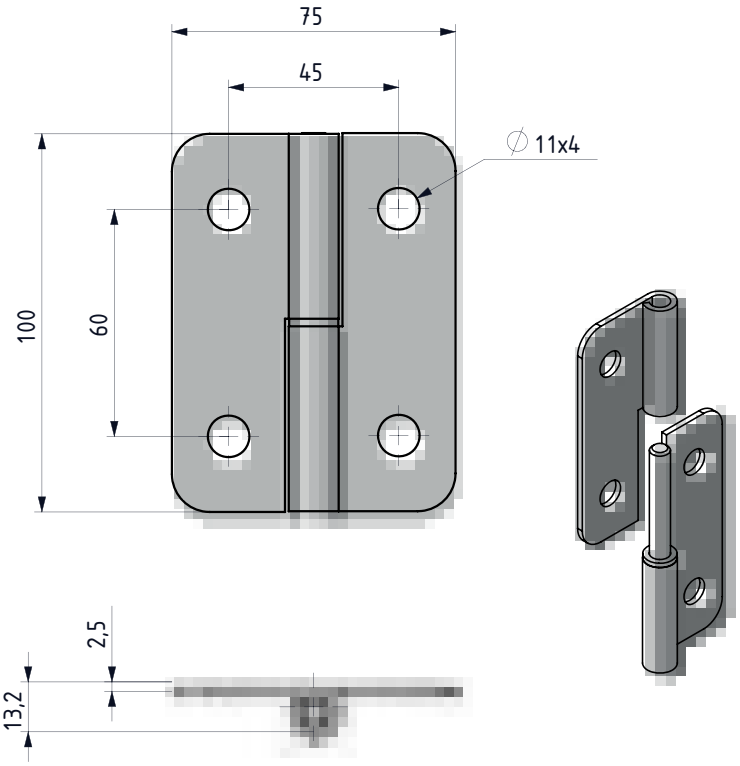

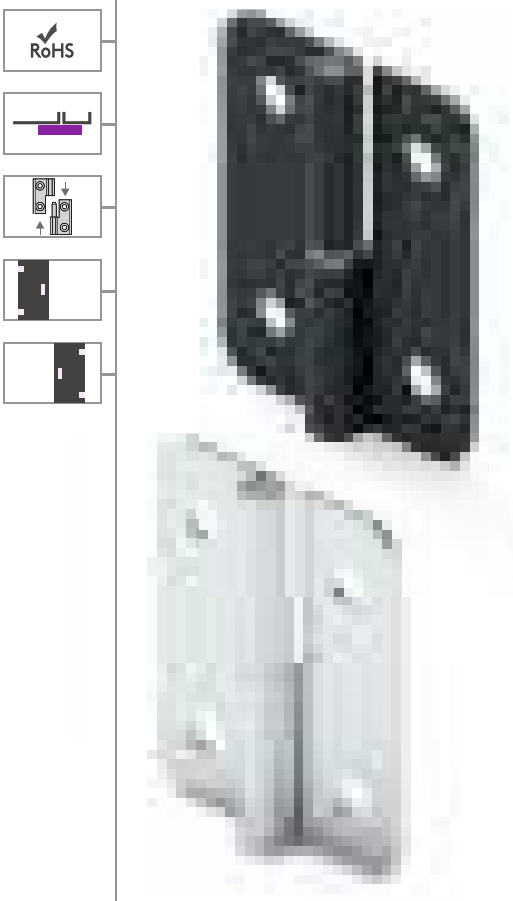



- **Stainless steel version: page 508**
- Heavy-duty lift off hinge
- Suitable for left- and right-hand applications
- Opening angle 180°

MATERIAL
BODY: Steel
PIN: Steel

FINISH
Zinc plated or black coated

MATERIAL	M	FINISH	F
Steel	6	Zinc plated	3
		Black coated	2

DOOR DIRECTION	
Right hand	001
Left hand	002

Group Code	Material	Finish	Door Direction
899	6	F	

Hinge Rotation Angle
0 180°

FLAT HINGES

LEAF HINGE

499



- Generally used for plain/flush-mounted, isolated, heavy doors
- Steel construction provides very high resistance
- M8 x 12 mm coach bolts supplied.

MATERIAL

BODY: Steel
PIN: Stainless Steel

V: 1

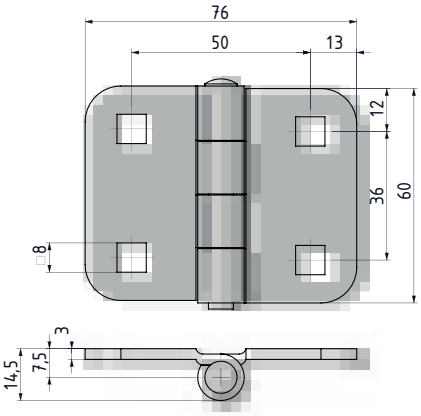

V: 2

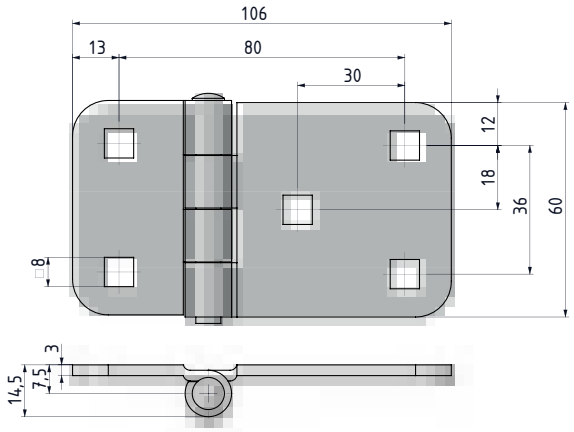

V: 3

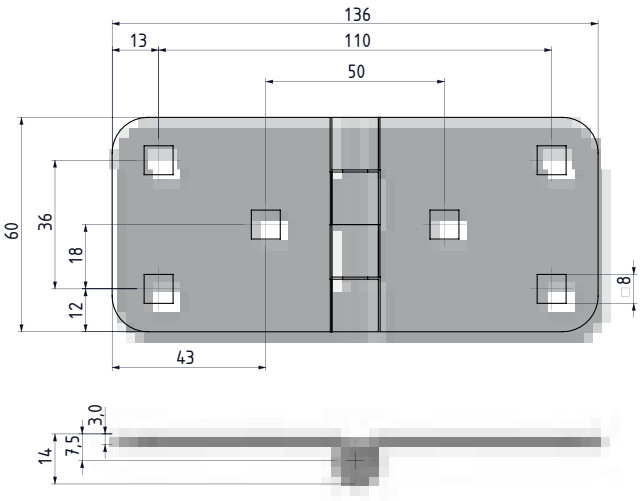

MATERIAL	M	FINISH	F
Steel	6	Zinc plated	3
		Black coated	2

Group Code	Material	Finish	Version
499	6	F	V

Hinge Rotation Angle



tel | +90 212 721 44 44 fax | +90 212 721 44 45

599 LEAF HINGE

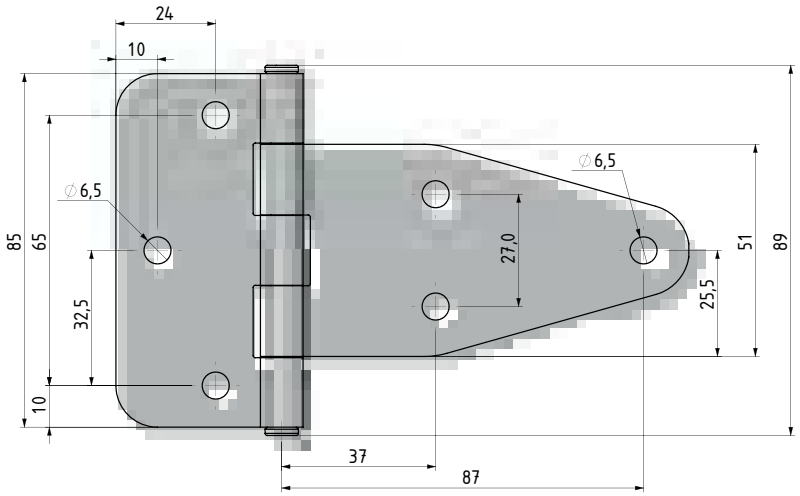







- **Stainless steel version: page 504**
- Generally used for plain/flush-mounted, isolated heavy doors
- Both parts attached by screws or nuts and bolts
- Hinge-rotation angle 180°

MATERIAL
BODY: Steel
PIN: Stainless Steel

MATERIAL	M	FINISH	F
Steel	6	Zinc plated	3
		Black coated	2

Group Code	Material	Finish
599	6	F

Hinge Rotation Angle

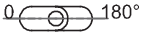

Note: Bolts are not supplied

LEAF HINGE

1599



- **Stainless steel version: page 506**
- Generally, used for plain/flush mounted, isolated, heavy doors.
- Both parts are attached by screws or nuts and bolts
- Hinge Rotation angle is 180°

MATERIAL
BODY: Steel
PIN: Stainless steel

FINISH
Zinc plated or black coated

Hinge Rotation Angle

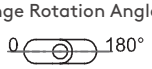

V: 1

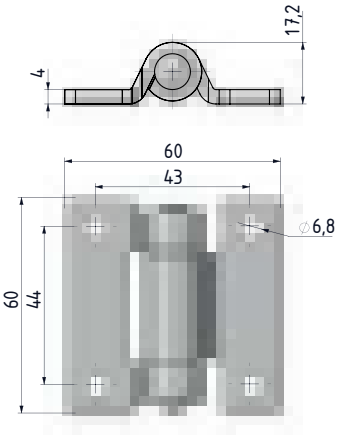

V: 2

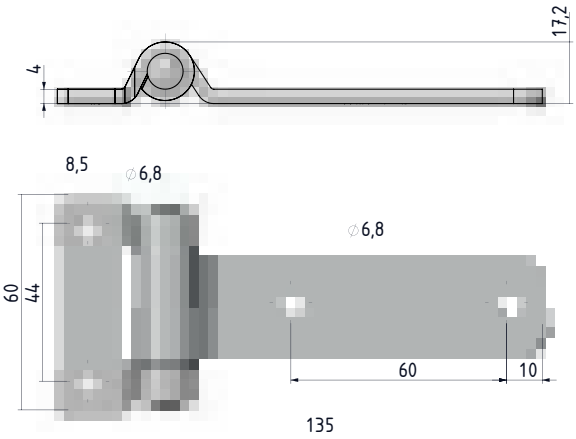

V: 3

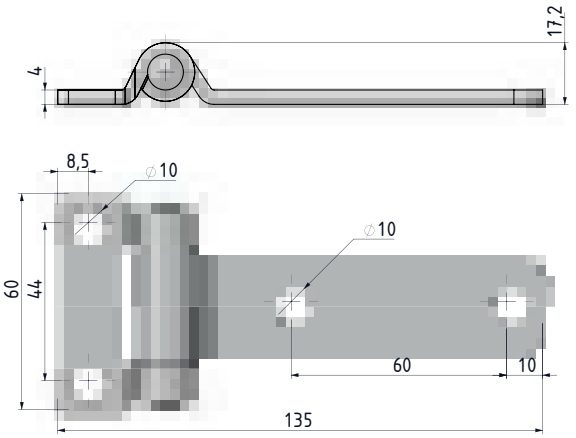

MATERIAL	M	FINISH	F
Steel	1	Zinc plated	3
		Black coated	2

Group Code	Material	Finish	Version
1599	6	F	V

tel | +90 212 721 44 44 fax | +90 212 721 44 45

1599 LEAF HINGE

V: 4

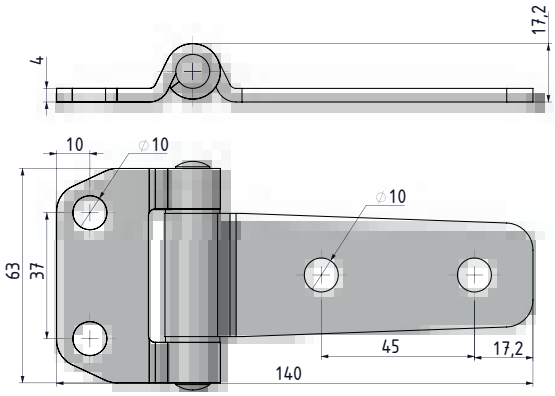

V: 5

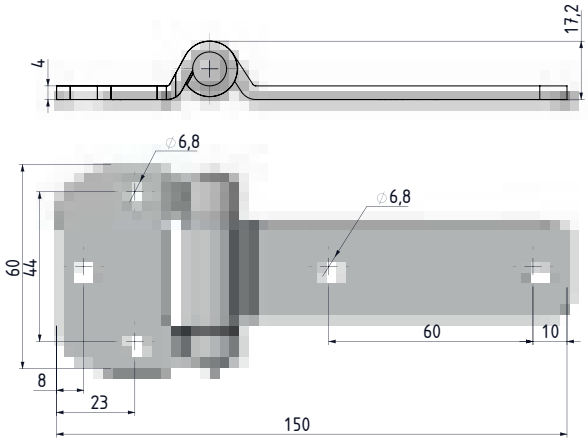

V: 6

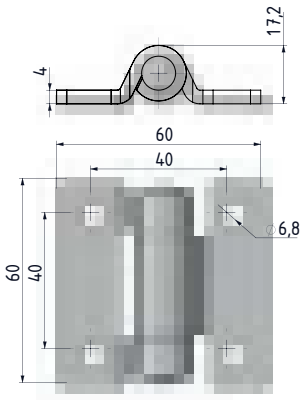



- **Stainless steel version: page 507**
- Generally, used for plain/flush mounted, isolated, heavy doors.
- Both parts are attached by screws or nuts and bolts
- Hinge Rotation angle is 180°

MATERIAL
BODY: Steel
PIN: Stainless steel

FINISH
Zinc plated or black coated

MATERIAL	M	FINISH	F
Steel	1	Zinc plated	3
		Black coated	2

Group Code	Material	Finish	Version
1599	6	F	V

Hinge Rotation Angle

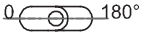

Note: Bolts are not supplied

LEAF HINGE

799



- **Stainless steel version: page 505**
- Generally used for plain/ flush-mounted, isolated, heavy doors

MATERIAL
BODY: Steel
PIN: Stainless Steel

Note: Bolts are not supplied

Hinge Rotation Angle



V: 1

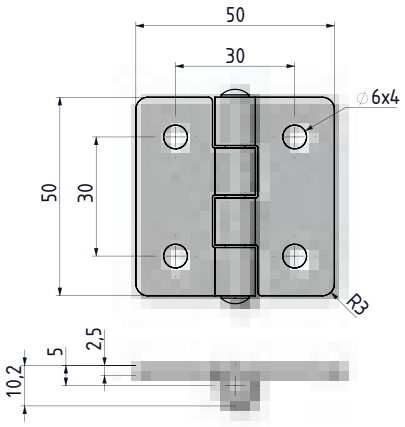

V: 2

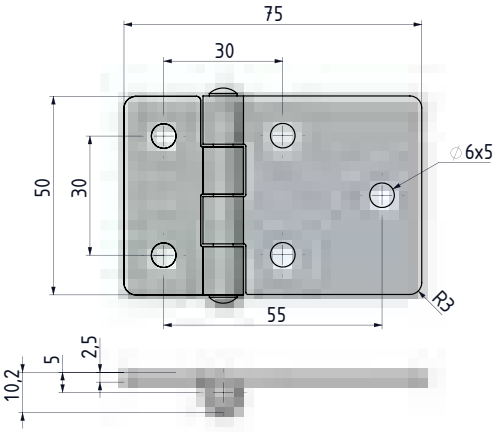

V: 3

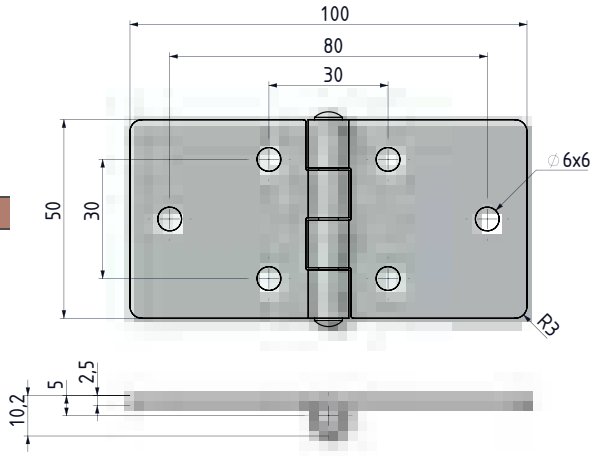

MATERIAL	M	FINISH	F
Steel	1	Zinc plated	3
		Black coated	2

Group Code	Material	Finish	Version
799	6	F	V

tel | +90 212 721 44 44 fax | +90 212 721 44 45

2899 LEAF HINGE

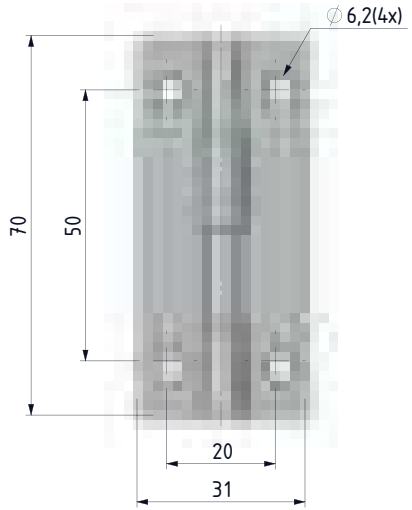

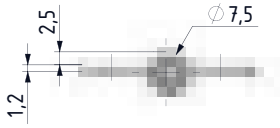

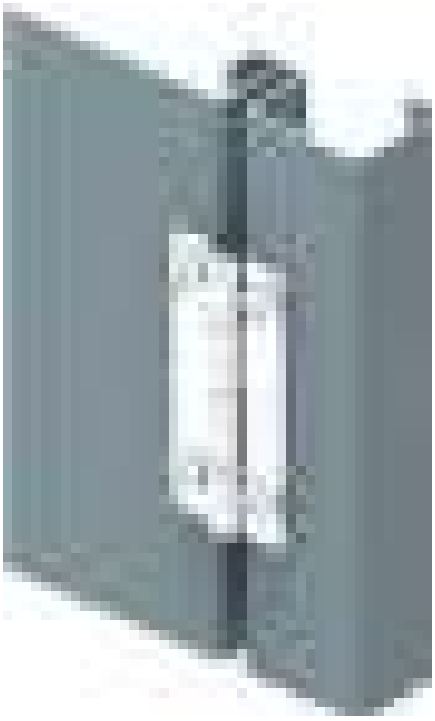



MATERIAL
BODY: Steel
PIN: Stainless Steel

Note: Bolts are not supplied

MATERIAL	M	FINISH	F
Steel	1	Zinc plated	3
		Black coated	2

Group Code	Material	Finish
2899	6	F

Hinge Rotation Angle



LIFT-OFF HINGE

4299

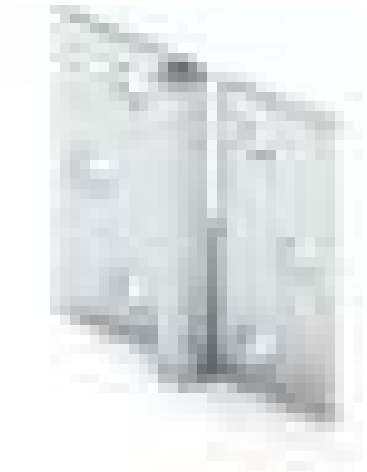

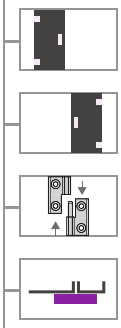

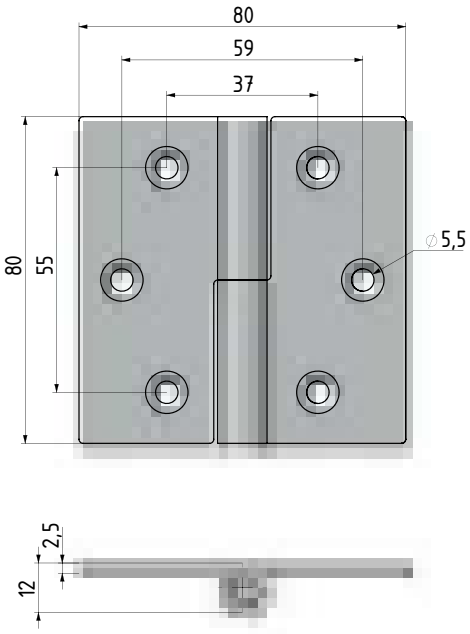

- **Stainless steel version: page 494**
- Designed for plain/flush-mounted doors
- Suitable for left- and right-hand applications

MATERIAL
BODY: Steel
PIN: Stainless Steel

FINISH
Zinc plated



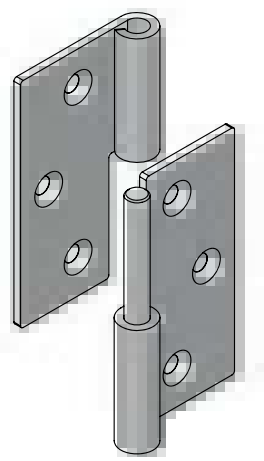

MATERIAL	M	FINISH	F
Steel	6	Zinc plated	3

DOOR DIRECTION	
Right hand	001
Left hand	002

Group Code	Material	Finish	Door Direction
4299	6	3	

Hinge Rotation Angle



tel | +90 212 721 44 44 fax | +90 212 721 44 45

1199 LEAF HINGE

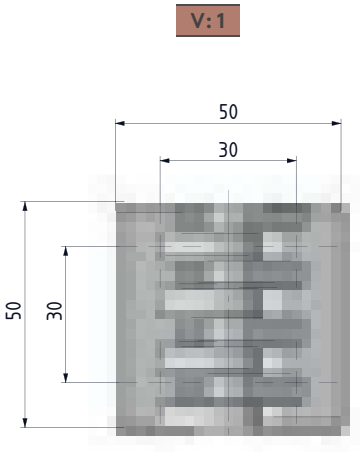

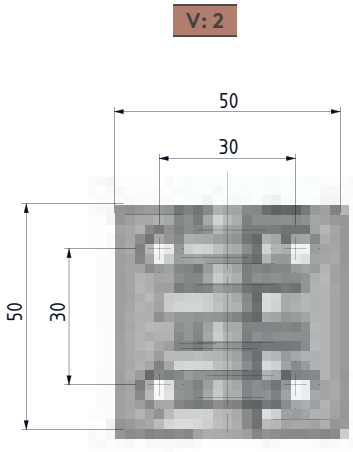

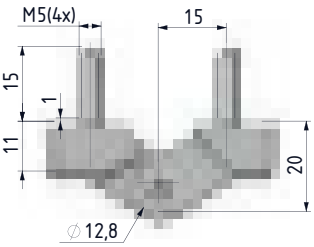

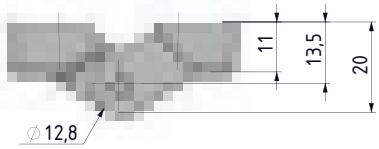





- Generally used for plain/flush-mounted doors
- With- or without-bolt options are available
- Stainless steel pin

MATERIAL

BODY: Polyamide DIN-EN ISO 1043-1 PA 6 GFR 30

PIN: Stainless Steel

MATERIAL	M	FINISH	F
Plastic	2	No finish	0

Group Code	Material	Finish	Version
1199	2	0	V

Hinge Rotation Angle



FLAT HINGES

TORQUE HINGE 2099

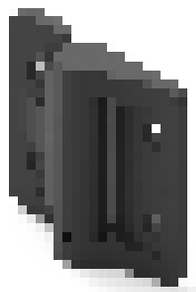

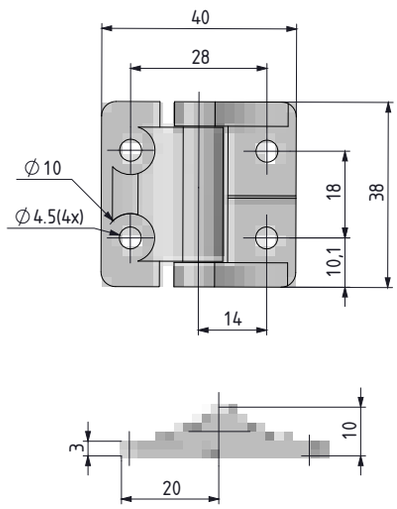

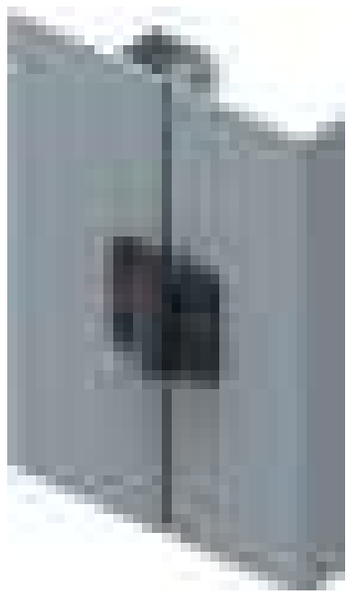

- 3.4 Nm symmetric torque
- Over 25,000 cycle life within torque specification
- Suitable for left- and right-hand application
- M5 screw mounting

MATERIAL

BODY: Zamak DIN-EN 1774-ZnAl4Cu1

PIN: Steel

TORQUE HINGE 2199

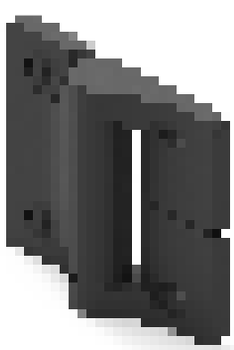

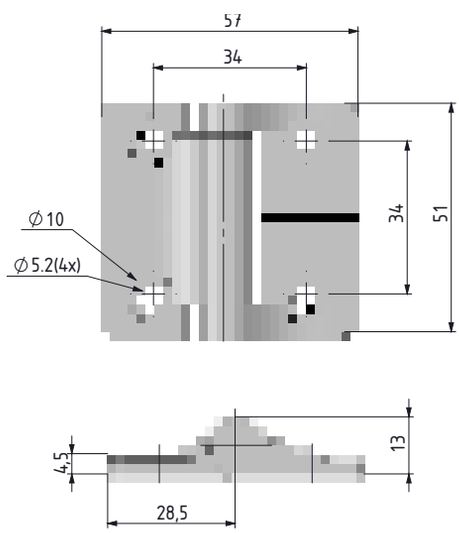

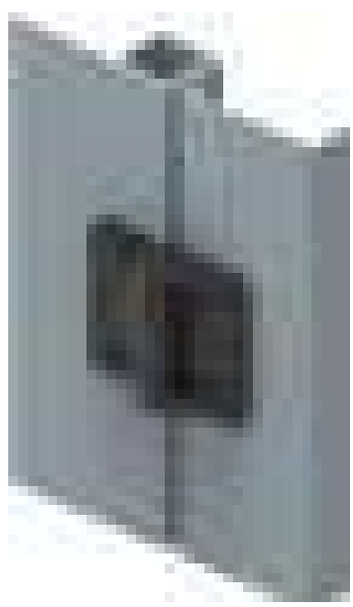

- 3.4 Nm symmetric torque
- Over 25,000 cycle life within torque specification
- Suitable left- and right-hand applications
- M5 screw mounting

Hinge Rotation Angle



MATERIAL	M	FINISH	F
Zamak	1	Black coated	2

Group Code	Material	Finish
	1	2

tel | +90 212 721 44 44 fax | +90 212 721 44 45

2599 INDEX HINGE

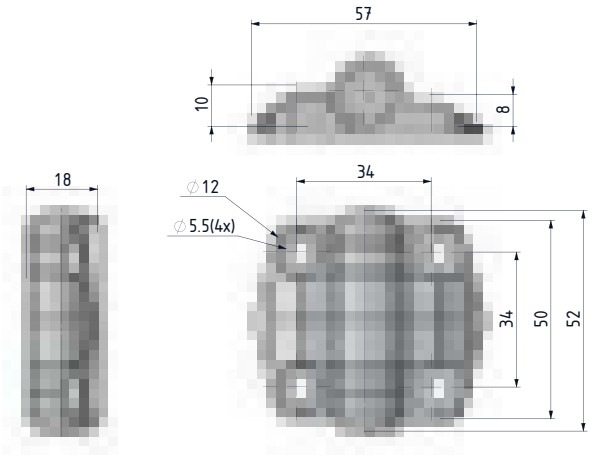

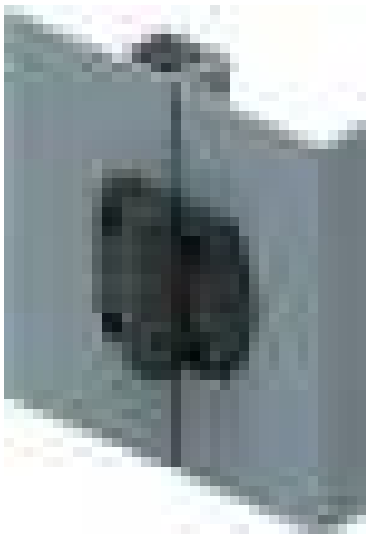



- Different angle and torque is available
- Holds door open at specific degrees. 80°, 115°, 150°

MATERIAL

BODY: Polyamide DIN-EN ISO 1043-1 PA6 GFR 30

PIN: Plastic

Position	Force (N-m)	VERSION
	No Detens	10
80° 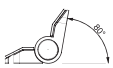	0.7	21
	1.1	22
	1.7	23
115° 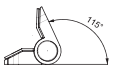	0.7	31
	1.1	32
	1.7	33
150° 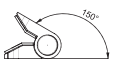	0.7	41
	1.1	42
	1.7	43

MATERIAL	M	FINISH	F
Plastic	2	No finish	0

Group Code	Material	Finish	Version
2599	2	0	V

ADJUSTABLE TORQUE HINGE — 2399

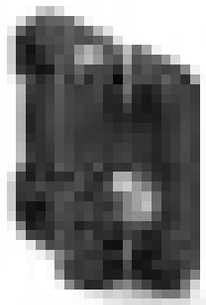

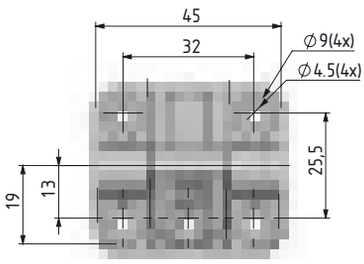

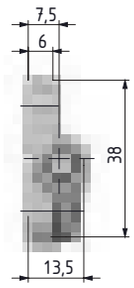

- Hinge torque can be adjusted with screw
- Provide position control
- Suitable for left- and right-hand applications
- Fixed with M4 screw

MATERIAL
BODY: Delrin
SCREWS AND NUTS:
Stainless Steel (AISI 304)

PERFORMANCE DETAILS
Axial load: (N)
Working load: 700
Breaking load weight: 1100
Radial load: (N)
Working load: 1400
Breaking load weight: 1800
Torque value: 0.8 N.m.
Working temperature:
- 5°C + 65°C
Fasteners:
(Bolts and nuts are not supplied)
Screw and nut: M4

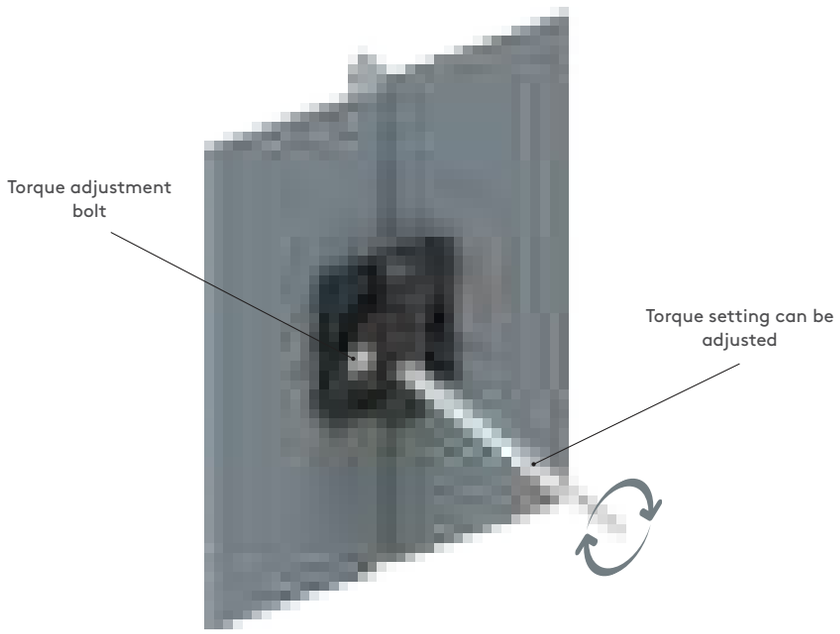

Axial load (N)

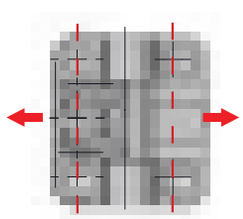

Radial load (N)

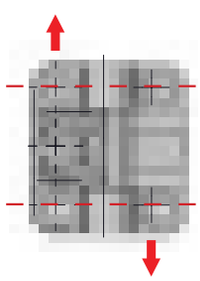

Hinge Rotation Angle

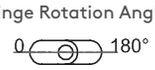

Note: Bolts are not supplied

MATERIAL	M	FINISH	F
Plastic	2	No finish	0

Group Code	Material	Finish
2399	2	0

tel | +90 212 721 44 44 fax | +90 212 721 44 45

2499 ADJUSTABLE TORQUE HINGE

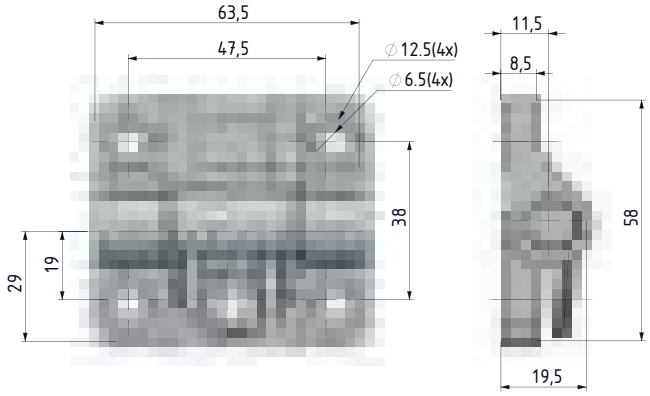

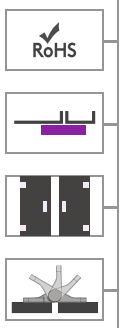

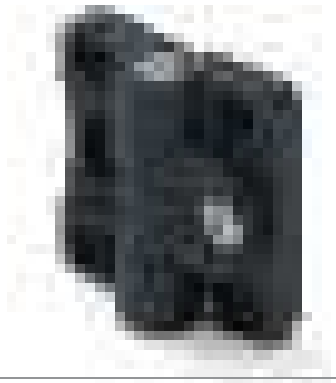

- Hinge torque can be adjusted by screw
- Provides position control
- Suitable for left- and right-hand applications
- Fixed by M6 screww

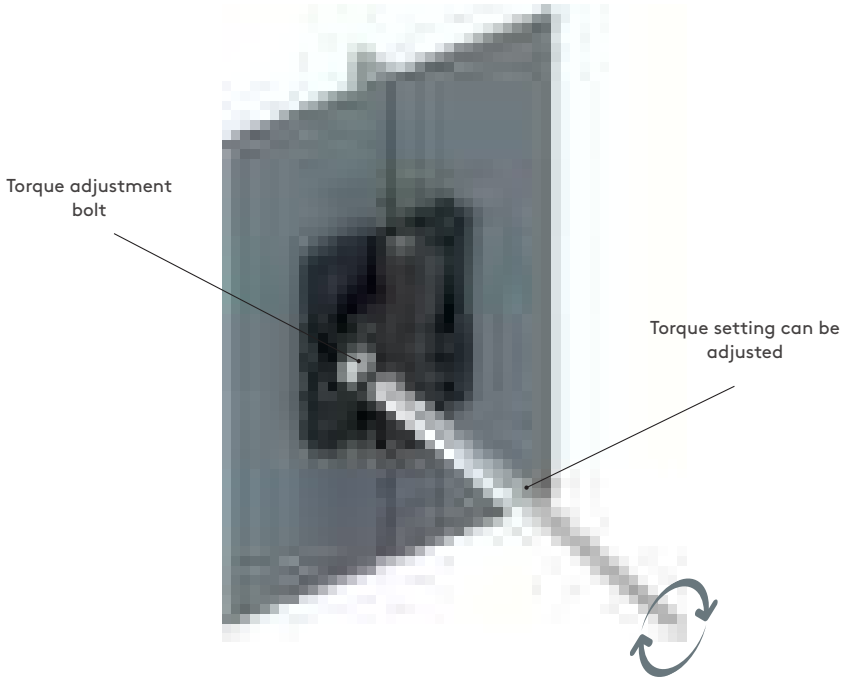

MATERIAL
BODY: Delrin
SCREWS AND NUTS:
Stainless Steel (AISI 304)

PERFORMANCE DETAILS
Axial load: (N)
Working load: 1500
Breaking load weight: 2350
Radial load: (N)
Working load: 2250
Breaking load weight: 3200
Torque value: 4 Nm
Working temperature:
- 5°C + 65°C
Fasteners:
(Bolts and nut are not supplied)
Screw and nut: M6

Axial load (N)

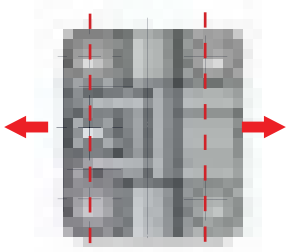

Radial load (N)

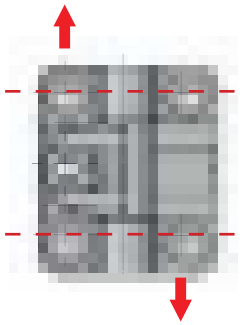

MATERIAL	M	FINISH	F
Plastic	2	No finish	0

Group Code	Material	Finish
2499	2	0

Hinge Rotation Angle

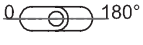

LIFT-OFF HINGE

699

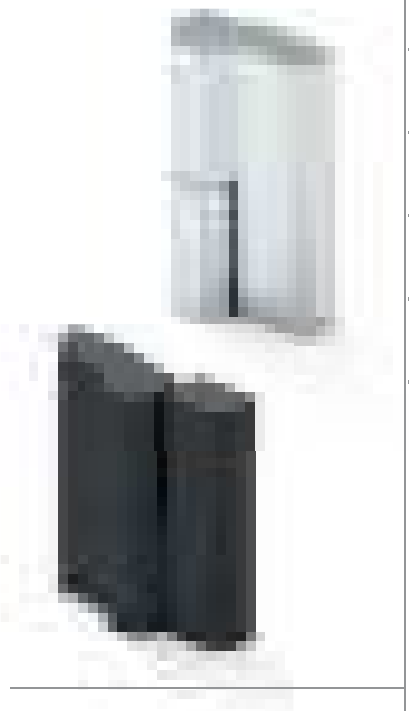

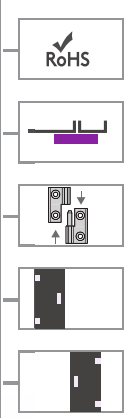

V: 1

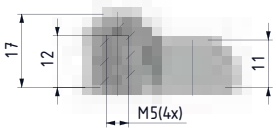

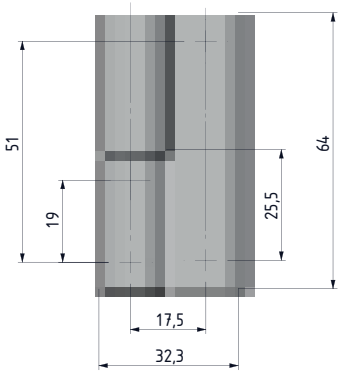

V: 2

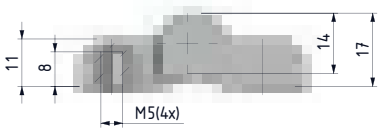

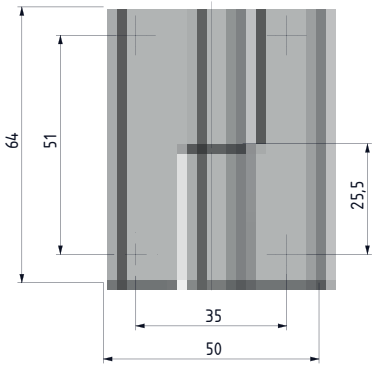

- Concealed mounting screws prevent external access to hinge
- Designed for plain/flush-mounted doors
- Suitable for left- and right-hand applications

MATERIAL

BODY: Zamak DIN-EN 1774-ZnAl4Cu1

PIN: Stainless Steel

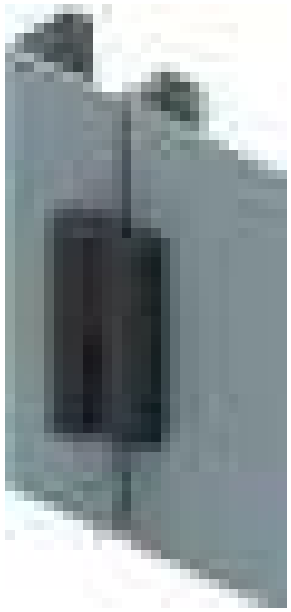

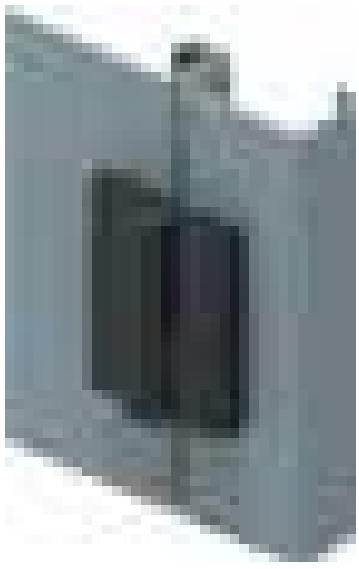

Hinge Rotation Angle

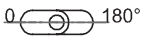

MATERIAL	M	FINISH	F
Zamak	1	Chrome plated	1
		Black coated	2

DOOR DIRECTION	
Right hand	001
Left hand	002

Group Code	Material	Finish	Version	Door Direction
699	1	F	V	

tel | +90 212 721 44 44 fax | +90 212 721 44 45

693 HINGE WITH BEARING

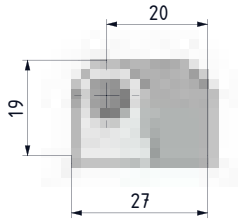

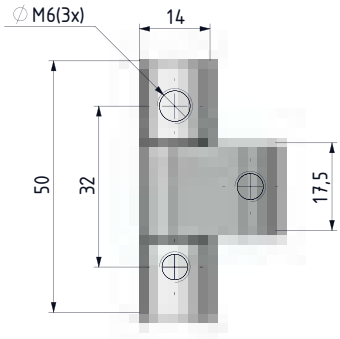





MATERIAL

BODY:	Zamak DIN-EN 1774-ZnAl4Cu1
PIN:	Stainless Steel
BEARING:	Delrin

MATERIAL	M	FINISH	F
Zamak	1	Chrome plated	1
		Black coated	2

Group Code	Material	Finish	Version
693	1	F	2

Hinge Rotation Angle



HVAC HINGE (3D) — 800



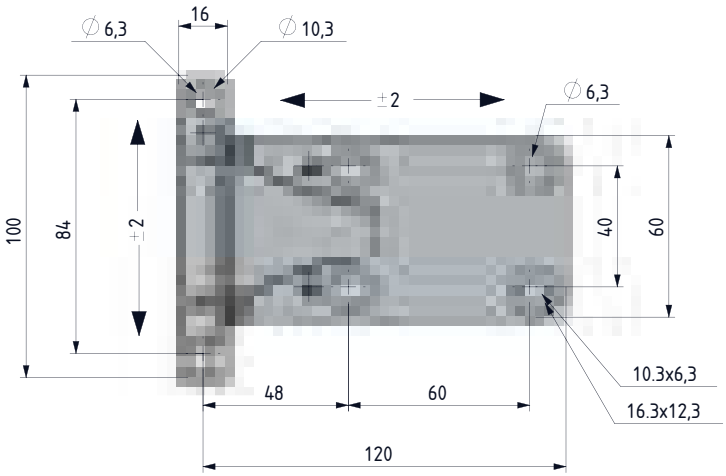

- Suitable for three-dimensional door adjustment
- Can be used for flush doors

MATERIAL

BODY:	Zamak DIN-EN 1774-ZnAl4Cu1
PIN:	Steel
BEARING:	Delrin

FINISH
Black coated



HINGE COVER — 320.02.017

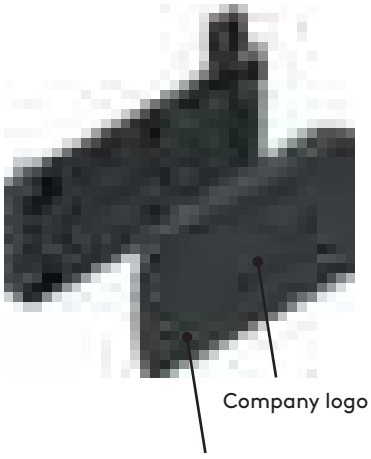

(Order seperetaly)



MATERIAL
Polyamide
DIN-EN ISO 1043-1 PA6 GFR 30

MATERIAL	M	FINISH	F
Zamak	1	Black coated	2

DOOR DIRECTION	
Right hand	001
Left hand	002

Group Code	Material	Finish	Door Direction
800	1	2	

tel | +90 212 721 44 44 fax | +90 212 721 44 45

500 HVAC HINGE (3D)

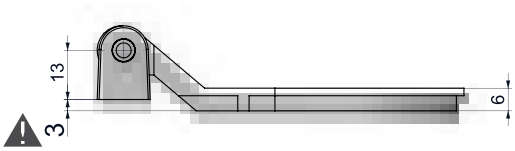

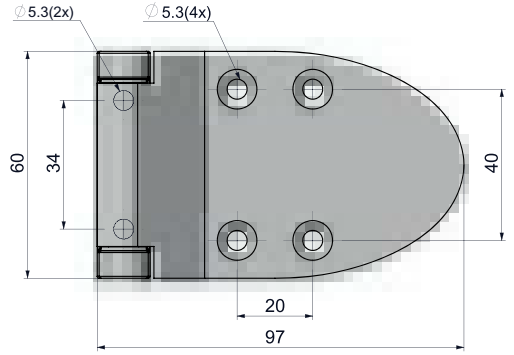

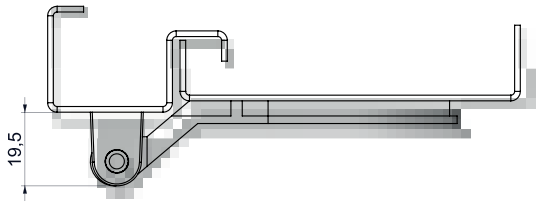





- Generally used for plain/flush-mounted, isolated, heavy doors
- Specially designed for central air conditioning units
- Stylish design
- Supplied with polyamide hinge cover and Stainless steel (AISI 304) hinge pin

MATERIAL

BODY:	Zamak DIN-EN 1774-ZnAl4Cu1
PIN:	Stainless Steel
BEARING:	Delrin
COVER:	PA 6 GFR 30

FINISH
Black coated

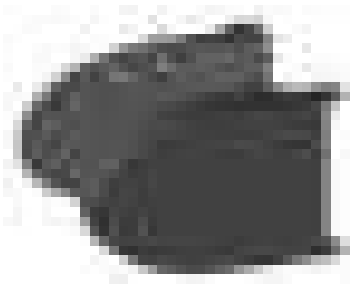

MATERIAL	M	FINISH	F
Zamak	1	Black coated	2

Group Code	Material	Finish
500	1	2

Hinge Rotation Angle

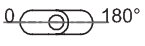

Note: Bolts are not supplied

HVAC HINGE

300



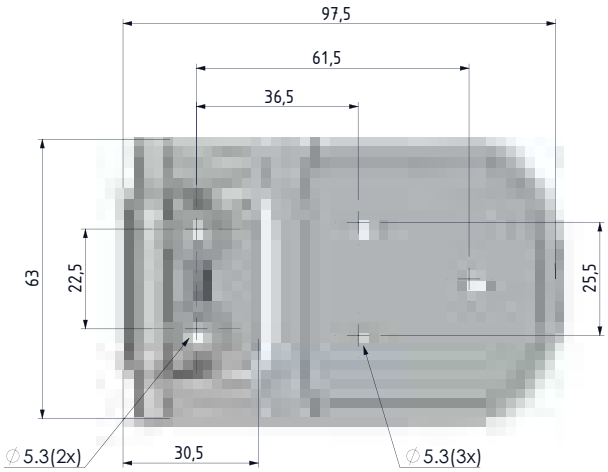

MATERIAL

BODY: Polyamide DIN-EN ISO 1043-1 PA 6 GFR 30

PIN: Stainless Steel

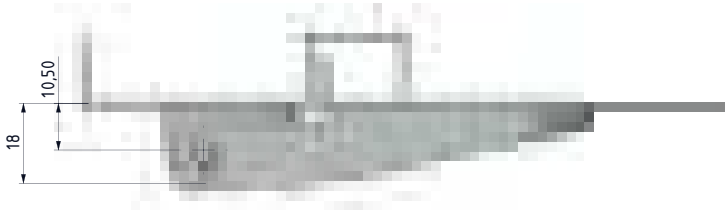



Hinge Rotation Angle



MATERIAL	M	FINISH	F
Plastic	2	No finish	0

Group Code	Material	Finish
300	2	0

tel | +90 212 721 44 44 fax | +90 212 721 44 45

1500 HVAC HINGE

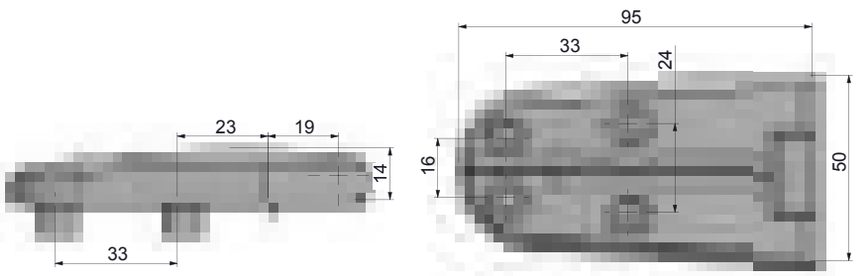

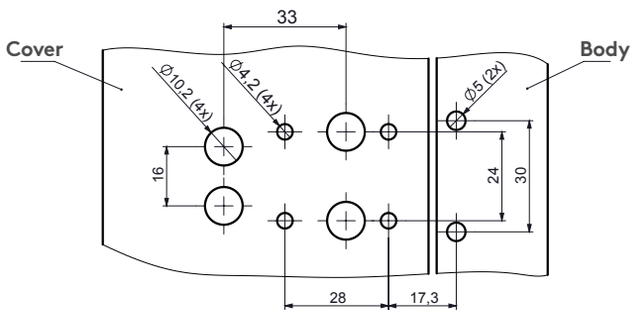

Cut out



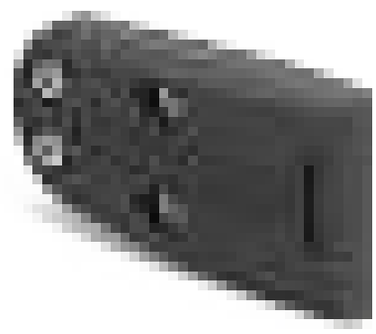

- It is specially designed for easy mounting in double hull insulation door.
- Hinge rotation 180°.
- It can adjust 3mm in vertical and horizontal direction.

MATERIAL

BODY:	Zamak DIN-EN 1774-ZnAl4Cu1
PIN:	Stainless Steel
BOLTS:	Stainless Steel

Note: Bolts are supplied

MATERIAL	M	FINISH	F
Zamak	1	Chrome plated	1
		Black coated	2

Group Code	Version	Material	Finish
1500	2	1	F

FLAT HINGES

TRUCK CARRIER HINGE

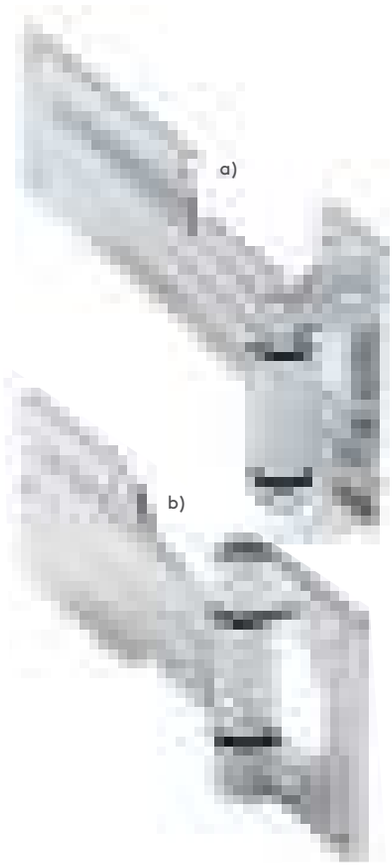

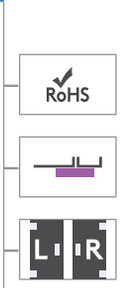

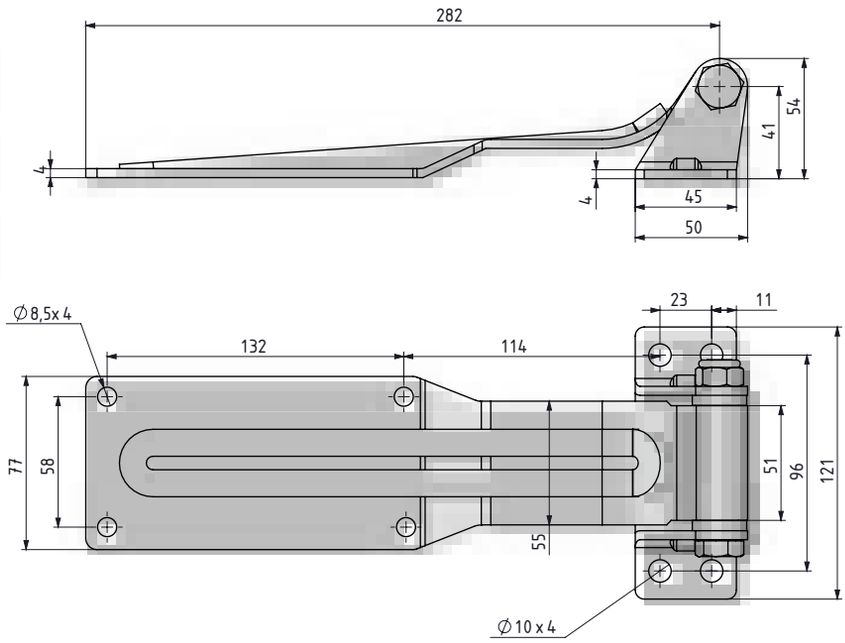

a)

MATERIAL & FINISH	PRODUCT CODE
Steel – Zinc plated	340.0.8024
Steel – Black coated	340.0.8025

- Strong hinge used on doors of refrigirated truck carriers and trailers
- Opening angle is 270 degrees
- Provided as zinc plated or black powder coated.
- Suiatble for LH and RH applications
- Please contact with Mesan for varios dimensions

MATERIAL
Frame part: Steel
Door part: Steel



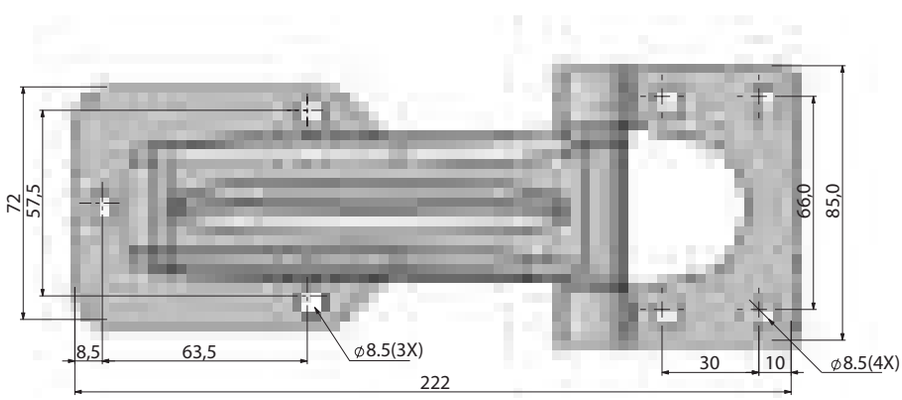

b)

MATERIAL & FINISH	PRODUCT CODE
Steel – Zinc plated	340.0.8023
Steel – Black coated	340.0.8029

tel | +90 212 721 44 44 fax | +90 212 721 44 45

FAST FIND INDEX


392



392


393


393



394


394

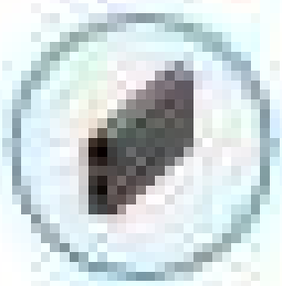
395


395


396


396


397

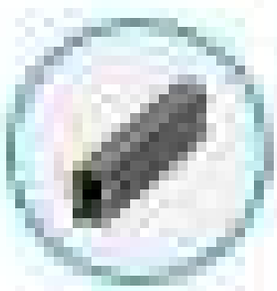
397

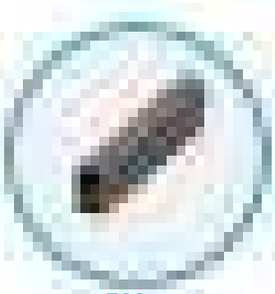
398


398


399


399



400

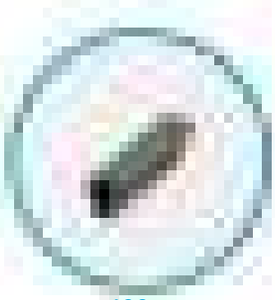
400


401


401



GASKETS

386-401

mesan
ESSENTRA COMPONENTS

e-mail | **info@mesanlocks.com** web | **www.mesanlocks.com**

Tightness Seals for Cabins and Panels

In parallel with the today's technological advancements and maximum customer expectations.

- Minimum permeability,
- Maximum sound insulation,
- Low shutting force,
- Vibration-free movement,
- Closing gaps with wide tolerance,
- Designed and manufactured for quick and easy assembly properties.

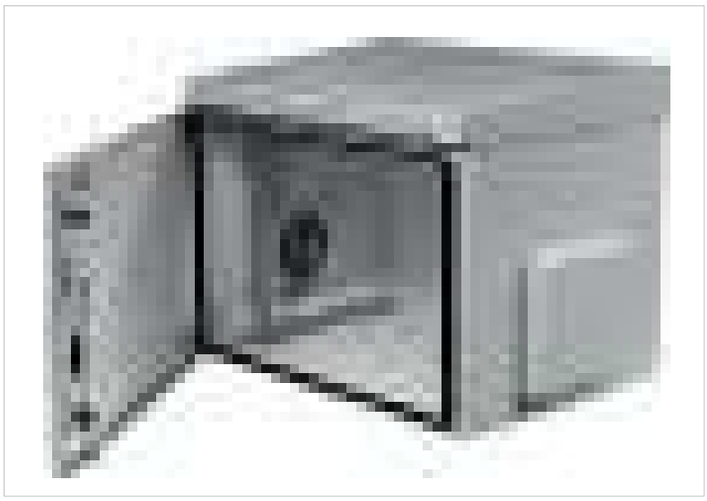

PVC

Polyvinyl chloride, generally known as PVC, is an elastomer with a wide area of use in daily life. It's preferred due to its resistance against environmental conditions as well as being easy to manufacture.

- It has a wide range of hardness with suitable modifications.
- It can be colored and it's recyclable.
- Its temperature range is between -25 and 70°C.
- It has high resistance against ozone, acid, wearing, and tearing, but low fuel resistance.

VMQ - SILICONE RUBBER

As opposed to other synthetic rubbers, it does not have carbon in its molecular chain. They only contain silicone and oxygen atoms.

- They have perfect heat resistance in dry environments (200 - 220 °C). During contact with high-pressure vapor (130 - 140 °C) or in case of aging at indoor areas without oxygen, the heat resistance may decrease due to hydrolysis.
- Ozone, ultraviolet light or atmospheric conditions do not change its properties.
- It is a good non-conductor.
- It has an automatic fire extinction property. The residual material that forms as a result of long-term fire exposure (silica) is a perfect non-conductor.
- It's physically harmless, therefore suitable for medical applications.
- Its temperature range is between -70 and 220°C.

tel | +90 212 721 44 44 fax | +90 212 721 44 45

Gaskets can be manufactured from different elastomer types in line with the customer expectations/technical specifications.

The mixtures obtained from the elastomers whose general properties are shown on the table, can be modified with different chemicals in order to provide special solutions for areas of application.

Characteristic	PVC	NBR	EPDM	SILICON
Min. operating temperature	-10	-25	-25	-25
Max. operating temperature	45	90	120	135
Tensile Strenght	Excellent	Excellent	Excellent	Conditional
Abrasion Resistance Wear Resistance	Excellent	Excellent	Fair	Fair
Resistant to:				
UV Light/weather exposure	●	●	●	●
Oil, greases	●	●	●	●
Fuels	●	●	●	●
Acids	●	●	●	●
Alkalines	●	●	●	●
Chlorinated Solvents		●	●	●
Alcohol	●	●	●	●

● Resistant ● Non-resistant ● Resistant against the conditions

Gasket structure

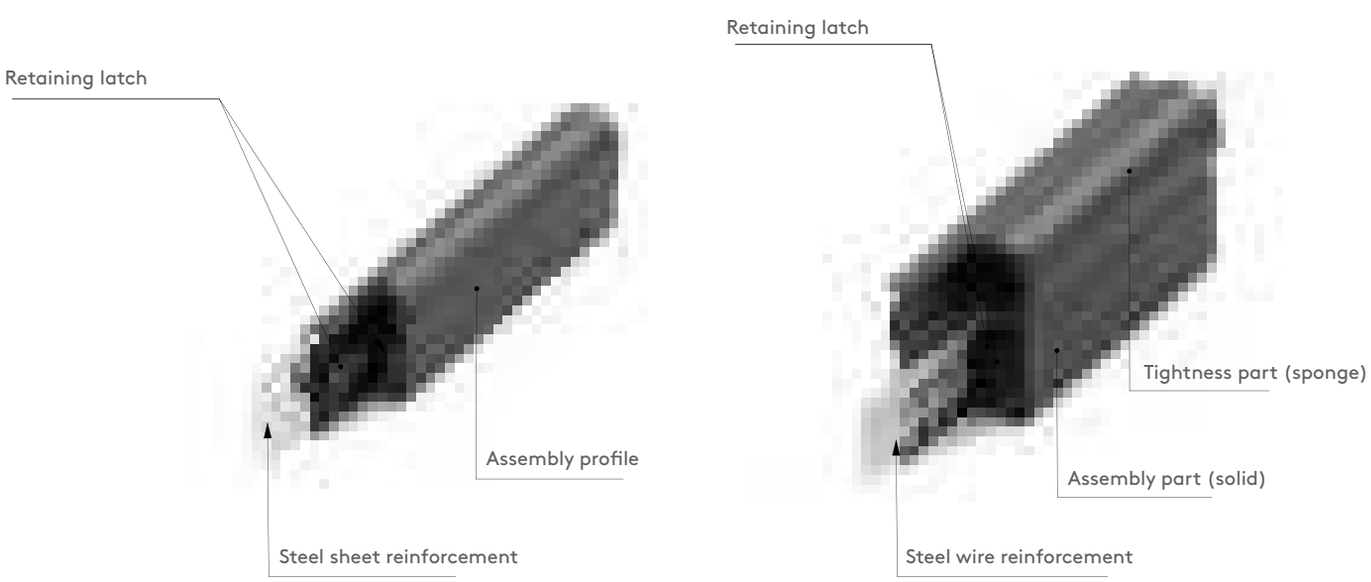

Gaskets with single or double components may be manufactured by using different metal reinforcement according to the area of application.

Technical Expressions:

In the technical data sheet, the minimum bending radius of the relevant gaskets have been stated with the **R values.**

Gasket **Compression** rate **(C) is between 40% and 60%.**

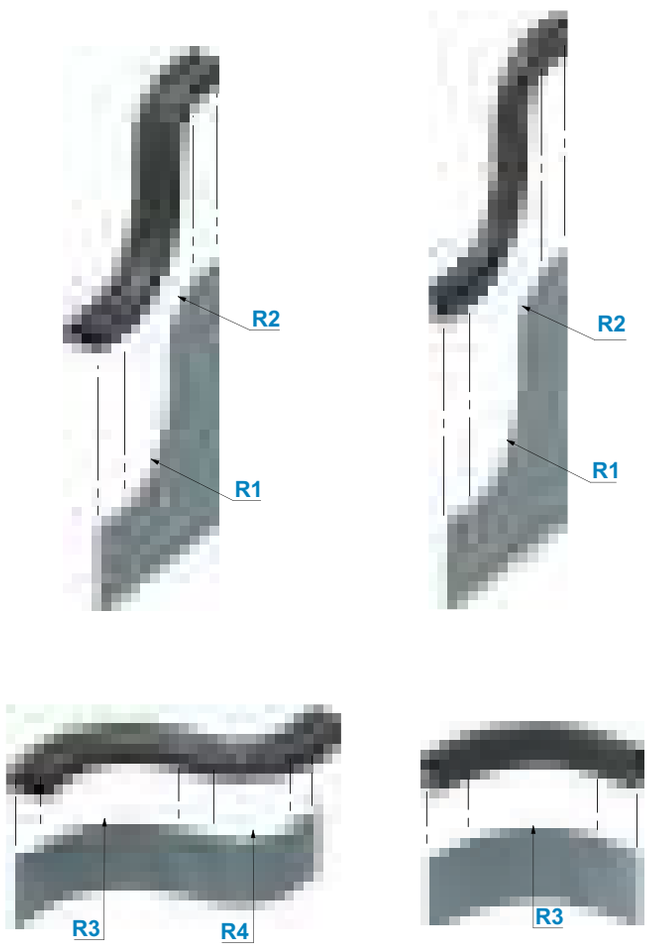

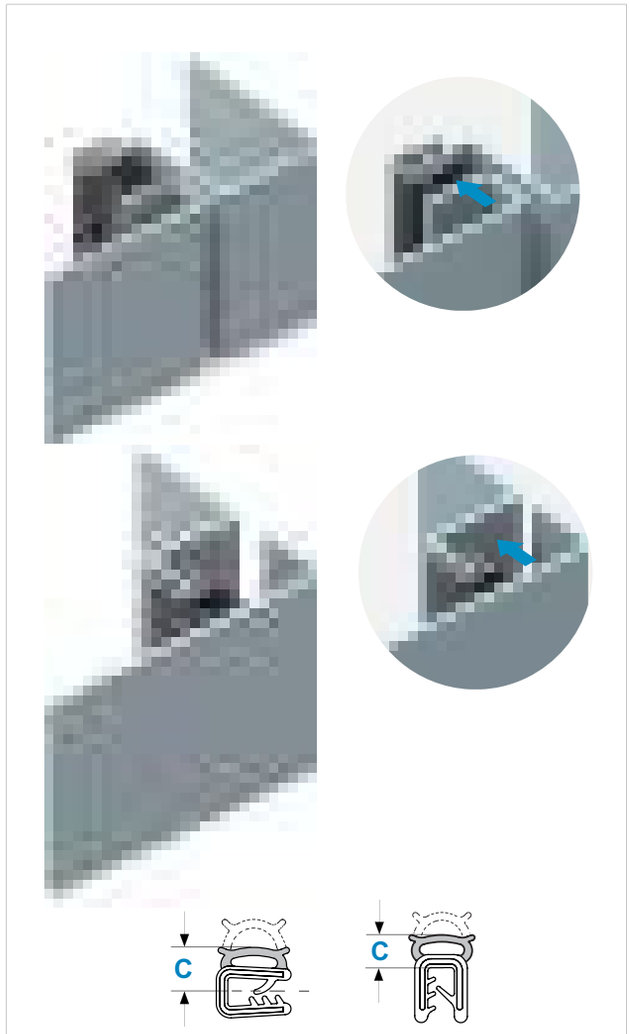

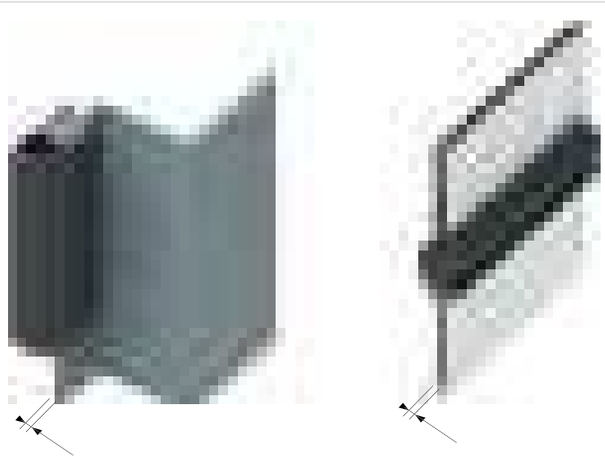

Maximum recommended door thickness has been defined with the **DT value.**

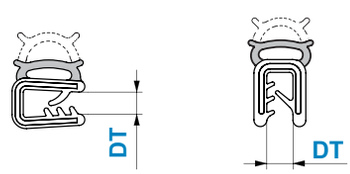

tel | +90 212 721 44 44 fax | +90 212 721 44 45

Applications:

With the 90º blind or end-to-end welding method, ready-to-assemble gaskets can be manufactured in line with the customer's request.

Product advantages:

- You do not need to cut gaskets.
- You save time by easily assembling on the doors.
- It provides tightness in the face ends and corners.

Note: Only applicable for EPDM gaskets.

You must completely specify the frame size of the gasket to be assembled in your order.



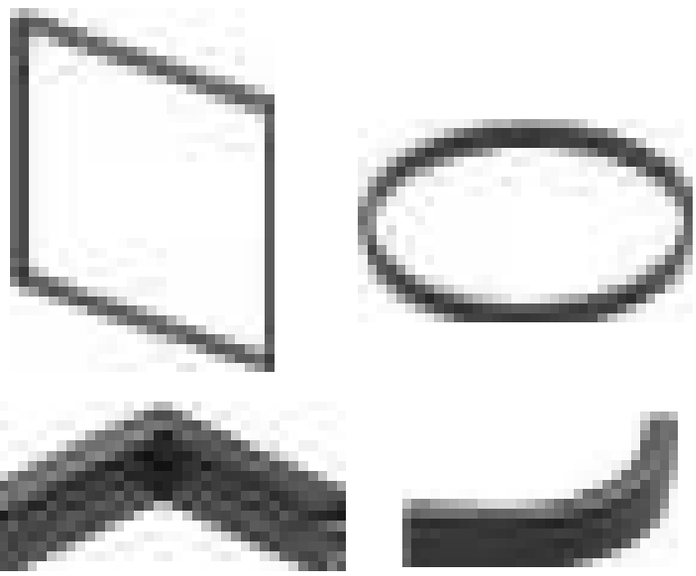



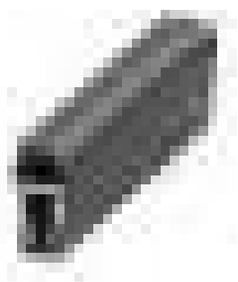

Some of our PDM gaskets have the UL 94-V0 flame-retardant properties..



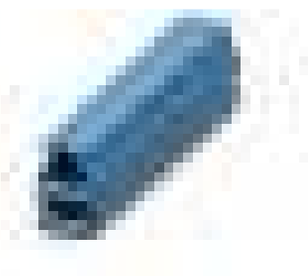

Silicone gaskets
Applicable in areas where cleaning and hygiene works are required.
New products can be worked out in line with the customer's requests.

Please consult our sales team for different gasket or property requests.

GASKETS

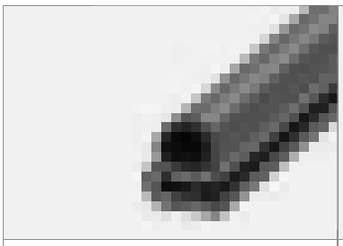

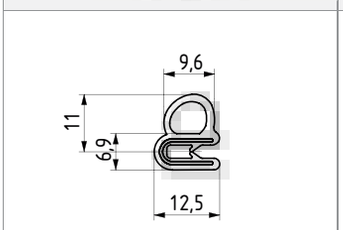

PRODUCT CODE	340.09.001
MATERIAL	EPDM
COLOR	BLACK
R1	40
R2	50
R3	80
R4	40
DT	2 - 1 mm
PACKAGING(mt)	100

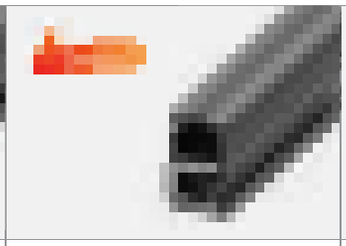

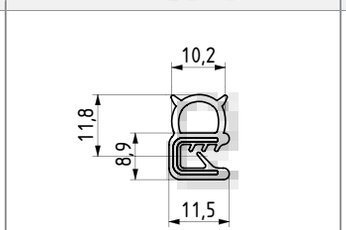

PRODUCT CODE	340.09.002
UL 94-V0	340.09.002.003
MATERIAL	EPDM
COLOR	BLACK
R1	50
R2	60
R3	180
R4	40
DT	3 - 1.5 mm
PACKAGING(mt)	100

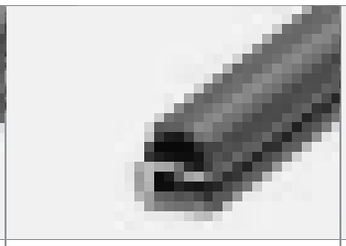

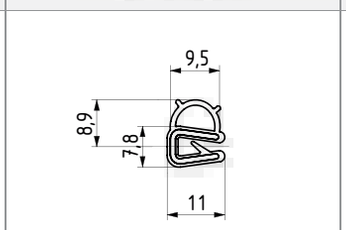

PRODUCT CODE	340.09.003
MATERIAL	EPDM
COLOR	BLACK
R1	40
R2	50
R3	90
R4	50
DT	2 - 1.5 mm
PACKAGING(mt)	100

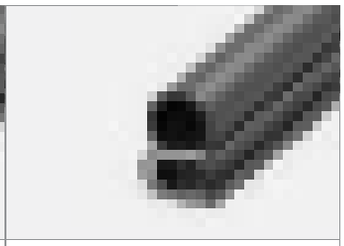

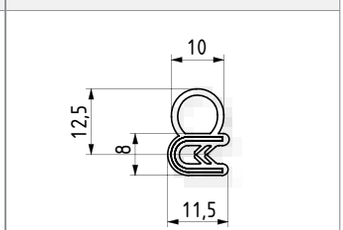

PRODUCT CODE	340.09.004
MATERIAL	EPDM
COLOR	BLACK
R1	40
R2	50
R3	-
R4	-
DT	2 - 1.5 mm
PACKAGING(mt)	100

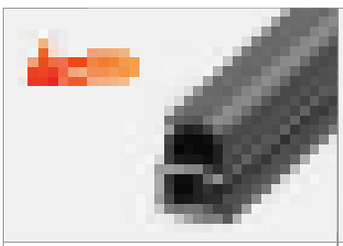

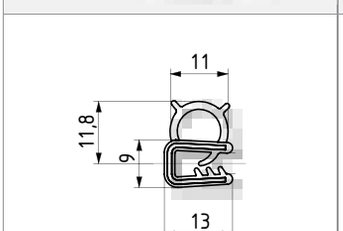

PRODUCT CODE	340.09.006
UL 94-V0	340.09.006.001
MATERIAL	EPDM
COLOR	BLACK
R1	50
R2	60
R3	180
R4	80
DT	3 - 1.5 mm
PACKAGING(mt)	100

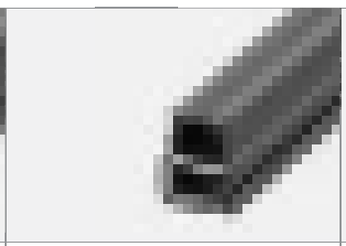

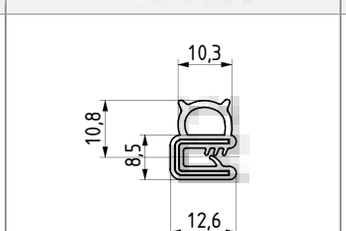

PRODUCT CODE	340.09.007
MATERIAL	EPDM
COLOR	BLACK
R1	60
R2	70
R3	150
R4	80
DT	2 - 1 mm
PACKAGING(mt)	100

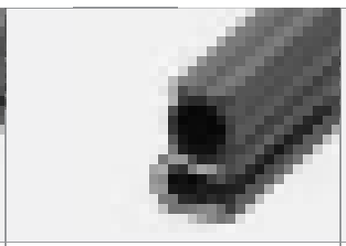

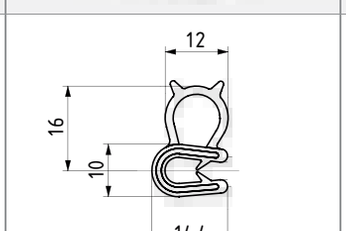

PRODUCT CODE	340.09.014
MATERIAL	EPDM
COLOR	BLACK
R1	70
R2	60
R3	230
R4	200
DT	2.5 - 1 mm
PACKAGING(mt)	50



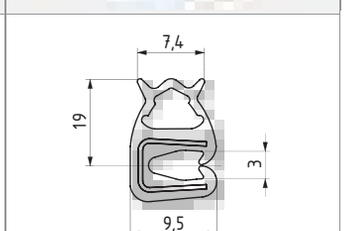

PRODUCT CODE	340.09.971
MATERIAL	Slicone
COLOR	BLUE
R1	30
R2	30
R3	90
R4	70
DT	2 - 1.5 mm
PACKAGING(mt)	50

tel | +90 212 721 44 44 fax | +90 212 721 44 45

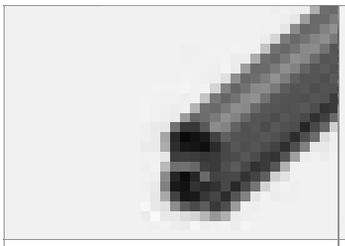

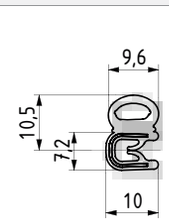

PRODUCT CODE	340.09.701
MATERIAL	PVC / EPDM
COLOR	BLACK
R1	20
R2	25
R3	55
R4	30
DT	2.5 - 1 mm
PACKAGING (mt)	2 X 50= 100

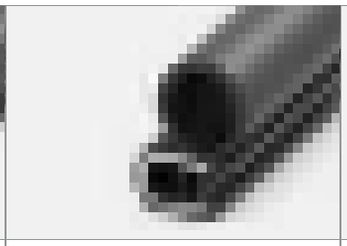

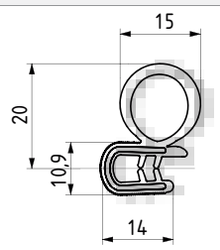

PRODUCT CODE	340.09.019
MATERIAL	EPDM
COLOR	BLACK
R1	60
R2	70
R3	220
R4	200
DT	3 - 1.5 mm
PACKAGING (mt)	50

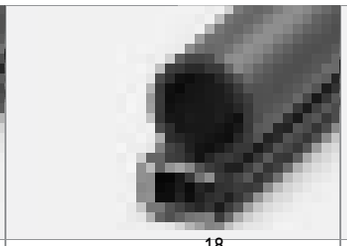

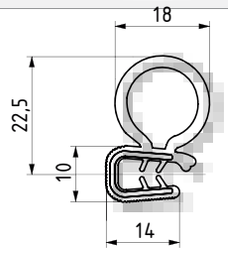

PRODUCT CODE	340.09.021
MATERIAL	EPDM
COLOR	BLACK
R1	80
R2	80
R3	250
R4	230
DT	3 - 1.5 mm
PACKAGING (mt)	40

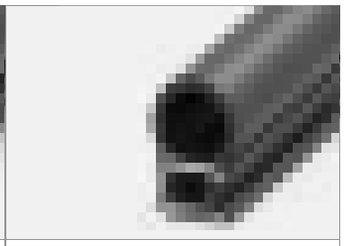

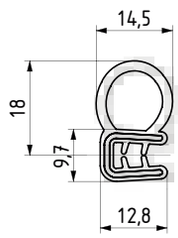

PRODUCT CODE	340.09.029
MATERIAL	EPDM
COLOR	BLACK
R1	50
R2	50
R3	130
R4	160
DT	3 - 1.5 mm
PACKAGING (mt)	50

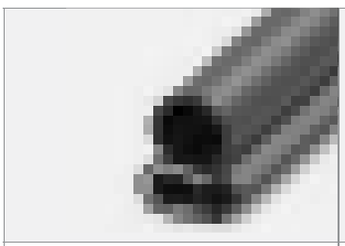

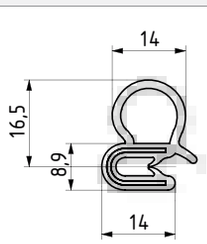

PRODUCT CODE	340.09.017
MATERIAL	EPDM
COLOR	BLACK
R1	60
R2	80
R3	230
R4	210
DT	2.5 - 1 mm
PACKAGING (mt)	50

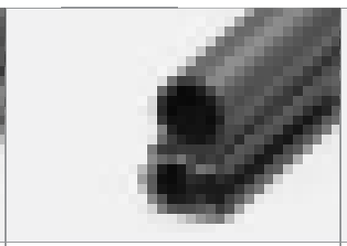

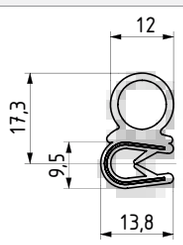

PRODUCT CODE	340.09.705
MATERIAL	PVC / EPDM
COLOR	BLACK / RED
R1	50
R2	60
R3	130
R4	70
DT	3 - 1.5 mm
PACKAGING (mt)	50

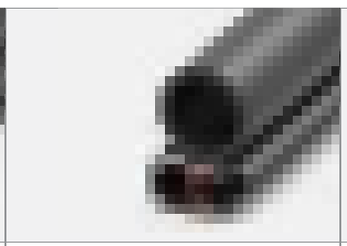

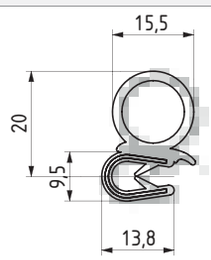

PRODUCT CODE	340.09.712
MATERIAL	PVC / EPDM
COLOR	BLACK / RED
R1	40
R2	70
R3	130
R4	110
DT	3 - 1.5 mm
PACKAGING (mt)	50

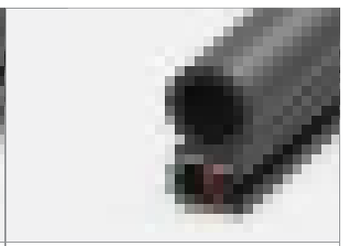

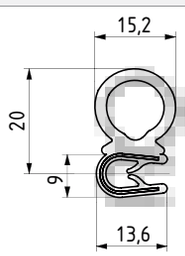

PRODUCT CODE	340.09.707
MATERIAL	PVC / EPDM
COLOR	BLACK / RED
R1	40
R2	70
R3	130
R4	110
DT	3 - 1.5 mm
PACKAGING (mt)	50

GASKETS



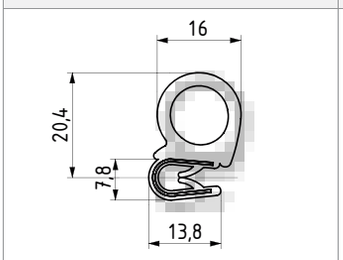

PRODUCT CODE	340.09.716
MATERIAL	PVC/EPDM
COLOR	BLACK/RED
R1	40
R2	60
R3	130
R4	110
DT	3 - 1.5 mm
PACKAGING(mt)	50

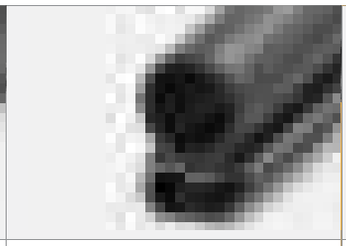

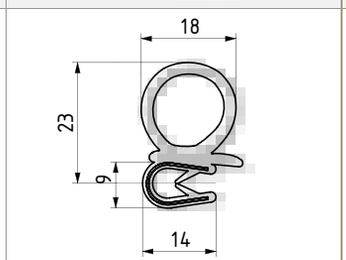

PRODUCT CODE	340.09.719
MATERIAL	PVC/EPDM
COLOR	BLACK/RED
R1	50
R2	70
R3	150
R4	130
DT	3 - 1.5 mm
PACKAGING(mt)	50



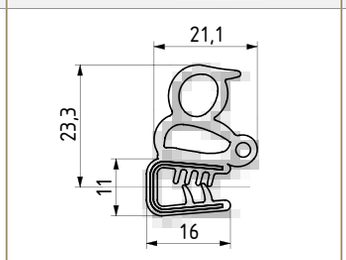

PRODUCT CODE	340.09.729
MATERIAL	PVC/EPDM
COLOR	BLACK/WHITE
R1	90
R2	90
R3	150
R4	150
DT	4 - 1.5 mm
PACKAGING(mt)	50

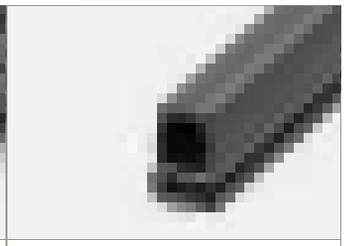

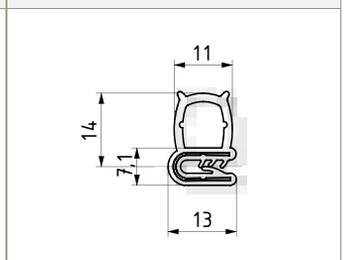

PRODUCT CODE	340.09.942
MATERIAL	PVC/EPDM
COLOR	BLACK
R1	30
R2	30
R3	100
R4	70
DT	2 - 1 mm
PACKAGING(mt)	50

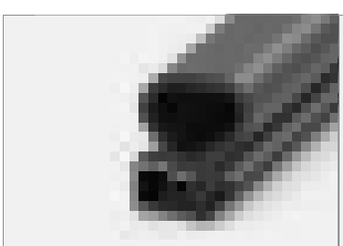

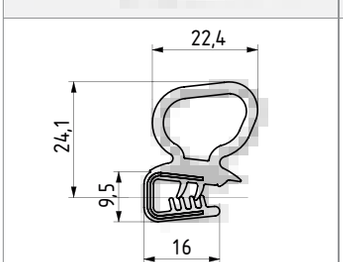

PRODUCT CODE	340.09.735
MATERIAL	EPDM
COLOR	BLACK
R1	70
R2	70
R3	-
R4	60
DT	4 - 1.5 mm
PACKAGING(mt)	50

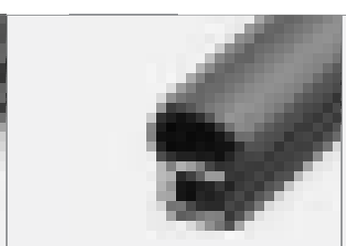

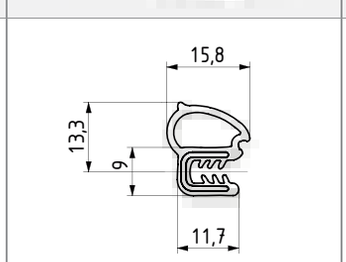

PRODUCT CODE	340.09.010
MATERIAL	EPDM
COLOR	BLACK
R1	70
R2	80
R3	100
R4	170
DT	3 - 2 mm
PACKAGING(mt)	50

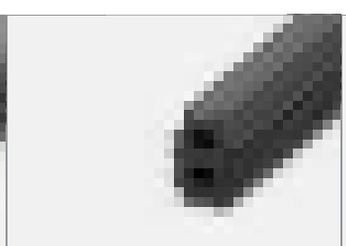

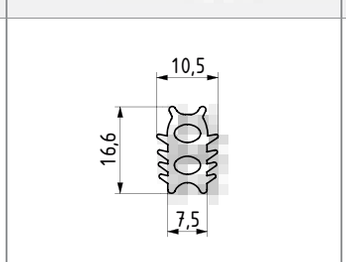

PRODUCT CODE	340.09.678
MATERIAL	EPDM
COLOR	BLACK
R1	70
R2	70
R3	50
R4	-
DT	-
PACKAGING(mt)	100

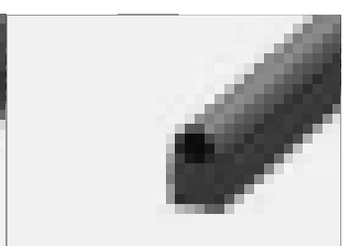

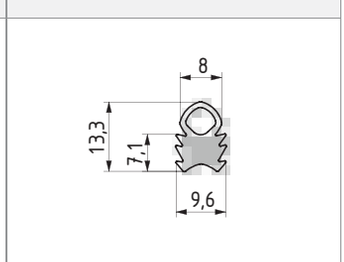

PRODUCT CODE	340.09.679
MATERIAL	EPDM
COLOR	BLACK
R1	70
R2	70
R3	40
R4	-
DT	-
PACKAGING(mt)	100

tel | +90 212 721 44 44 fax | +90 212 721 44 45

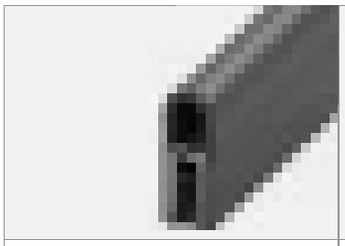

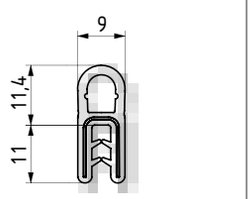

PRODUCT CODE	340.09.101
MATERIAL	EPDM
COLOR	BLACK
R1	130
R2	70
R3	30
R4	-
DT	2.5 - 1.5 mm
PACKAGING(mt)	100



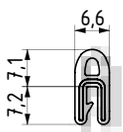

PRODUCT CODE	340.09.102
UL 94-V0	340.09.102.001
MATERIAL	EPDM
COLOR	BLACK
R1	90
R2	60
R3	25
R4	-
DT	1.5 - 1 mm
PACKAGING(mt)	100

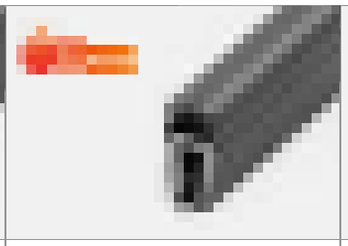

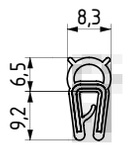

PRODUCT CODE	340.09.103
UL 94-V0	340.09.103.002
MATERIAL	EPDM
COLOR	BLACK
R1	70
R2	60
R3	25
R4	-
DT	2 - 1 mm
PACKAGING(mt)	100

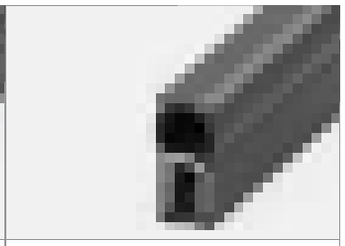

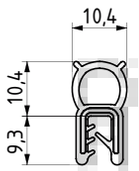

PRODUCT CODE	340.09.104
MATERIAL	EPDM
COLOR	BLACK
R1	110
R2	60
R3	40
R4	40
DT	3 - 1.5 mm
PACKAGING(mt)	100

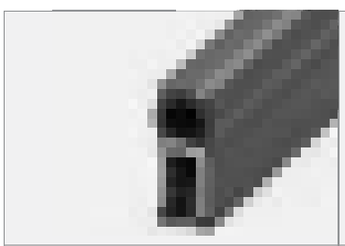

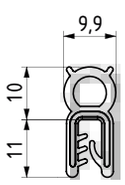

PRODUCT CODE	340.09.105
MATERIAL	EPDM
COLOR	BLACK
R1	100
R2	60
R3	40
R4	-
DT	3.5 - 1.5 mm
PACKAGING(mt)	100

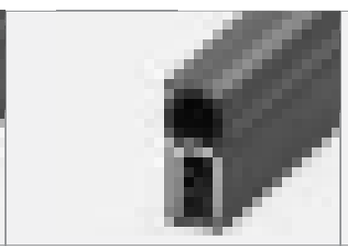

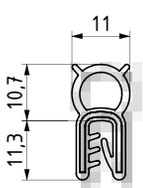

PRODUCT CODE	340.09.107
MATERIAL	EPDM
COLOR	BLACK
R1	100
R2	60
R3	40
R4	-
DT	3.5 - 1.5 mm
PACKAGING(mt)	100

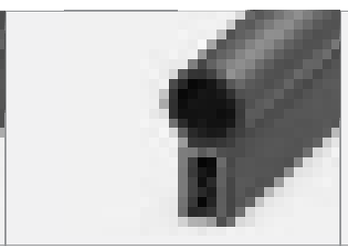

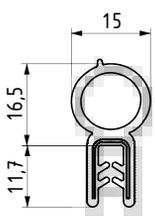

PRODUCT CODE	340.09.124
MATERIAL	EPDM
COLOR	BLACK
R1	160
R2	110
R3	50
R4	-
DT	3.5 - 1.5 mm
PACKAGING(mt)	50

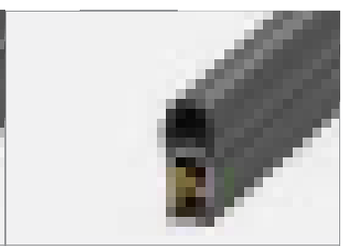

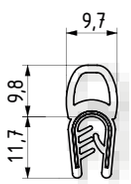

PRODUCT CODE	340.09.802
MATERIAL	PVC / EPDM
COLOR	BLACK / YELLOW
R1	90
R2	80
R3	30
R4	-
DT	3 - 1.5 mm
PACKAGING(mt)	100

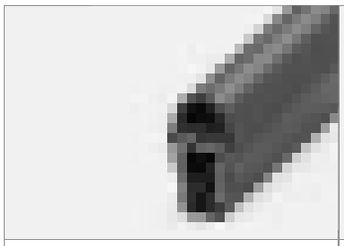

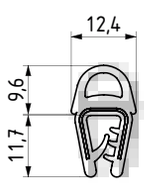

PRODUCT CODE	340.09.804
MATERIAL	PVC/EPDM
COLOR	BLACK/YELLOW
R1	90
R2	80
R3	30
R4	-
DT	2.5 - 1.5 mm
PACKAGING(mt)	50

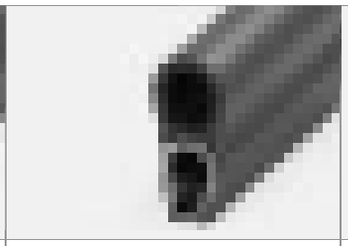

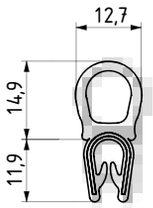

PRODUCT CODE	340.09.805
MATERIAL	PVC/EPDM
COLOR	BLACK
R1	90
R2	70
R3	30
R4	-
DT	3 - 1.5 mm
PACKAGING(mt)	50

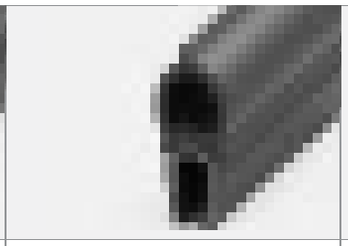

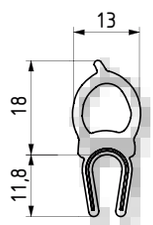

PRODUCT CODE	340.09.806
MATERIAL	PVC/EPDM
COLOR	BLACK
R1	90
R2	70
R3	30
R4	-
DT	3.5 - 1.5 mm
PACKAGING(mt)	50

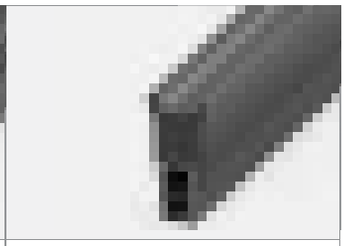

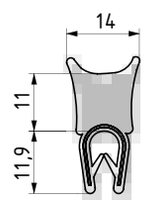

PRODUCT CODE	340.09.810
MATERIAL	PVC/EPDM
COLOR	BLACK
R1	160
R2	60
R3	60
R4	-
DT	3 - 1.5 mm
PACKAGING(mt)	50

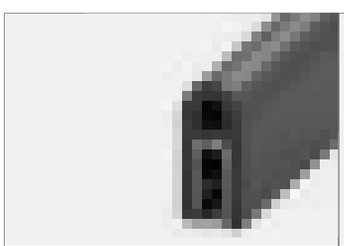

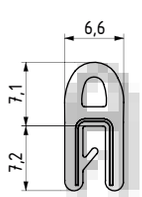

PRODUCT CODE	340.09.100
MATERIAL	PVC/EPDM
COLOR	BLACK
R1	60
R2	40
R3	30
R4	-
DT	2 - 1.5 mm
PACKAGING(mt)	50

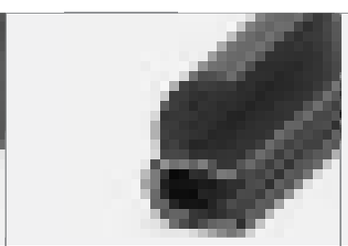

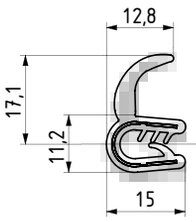

PRODUCT CODE	340.09.202
MATERIAL	EPDM
COLOR	BLACK
R1	60
R2	60
R3	-
R4	-
DT	3 - 1.5 mm
PACKAGING(mt)	50

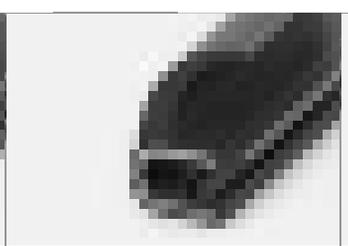

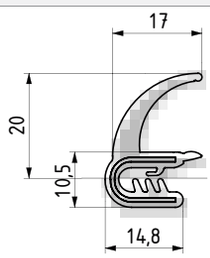

PRODUCT CODE	340.09.203
MATERIAL	EPDM
COLOR	BLACK
R1	120
R2	90
R3	-
R4	-
DT	3 - 1.5 mm
PACKAGING(mt)	50

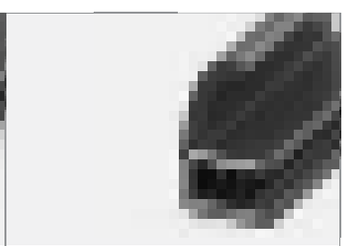

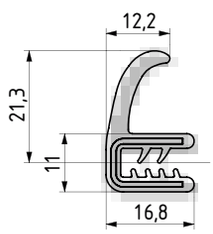

PRODUCT CODE	340.09.205
MATERIAL	EPDM
COLOR	BLACK
R1	60
R2	110
R3	140
R4	220
DT	4 - 2.5 mm
PACKAGING(mt)	40

tel | +90 212 721 44 44 fax | +90 212 721 44 45

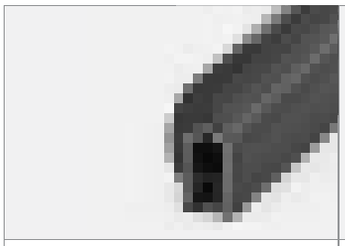

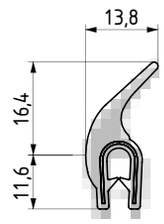

PRODUCT CODE	340.09.206
MATERIAL	EPDM
COLOR	BLACK
R1	-
R2	-
R3	30
R4	-
DT	3 - 2 mm
PACKAGING(mt)	50

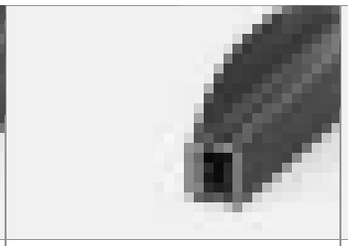

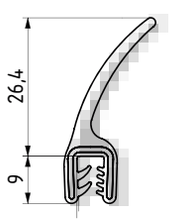

PRODUCT CODE	340.09.210
MATERIAL	EPDM
COLOR	BLACK
R1	-
R2	-
R3	60
R4	-
DT	3 - 2 mm
PACKAGING(mt)	50

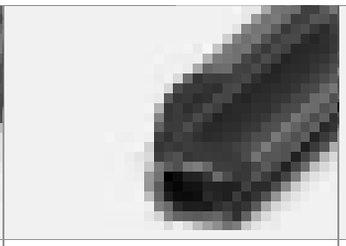

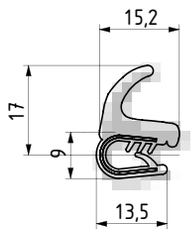

PRODUCT CODE	340.09.902
MATERIAL	PVC/EPDM
COLOR	BLACK
R1	50
R2	50
R3	160
R4	160
DT	3 - 2 mm
PACKAGING(mt)	50

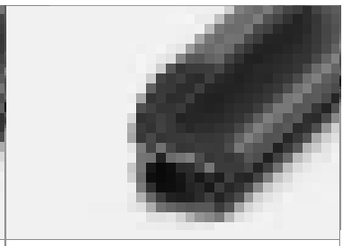

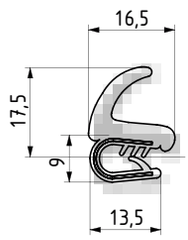

PRODUCT CODE	340.09.904
MATERIAL	PVC/EPDM
COLOR	BLACK
R1	50
R2	50
R3	160
R4	160
DT	3 - 1.5 mm
PACKAGING(mt)	50

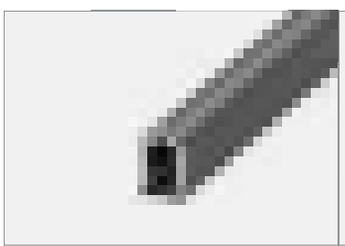

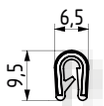

PRODUCT CODE	340.09.502
MATERIAL	PVC
COLOR	BLACK
R1	20
R2	20
R3	15
R4	-
DT	2 - 1 mm
PACKAGING(mt)	200

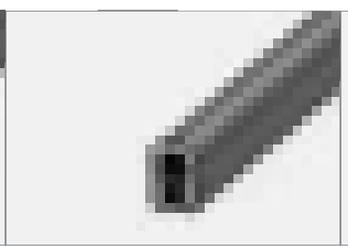

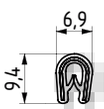

PRODUCT CODE	340.09.504
MATERIAL	PVC
COLOR	BLACK
R1	20
R2	20
R3	15
R4	-
DT	2 - 1 mm
PACKAGING(mt)	200

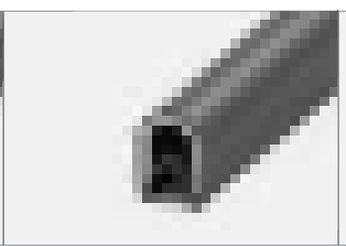

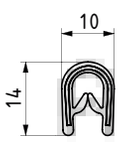

PRODUCT CODE	340.09.516
MATERIAL	PVC
COLOR	BLACK
R1	30
R2	40
R3	30
R4	-
DT	4 - 2 mm
PACKAGING(mt)	150

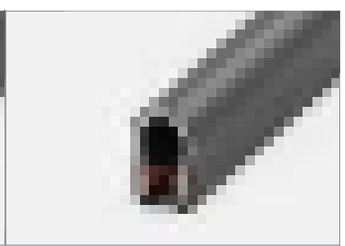

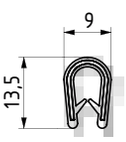

PRODUCT CODE	340.09.517
MATERIAL	PVC
COLOR	BLACK/RED
R1	30
R2	40
R3	30
R4	-
DT	3 - 1.5 mm
PACKAGING(mt)	150

GASKETS

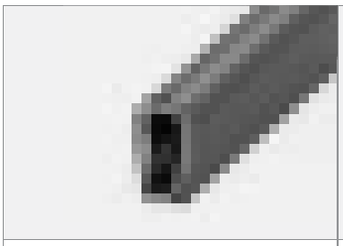

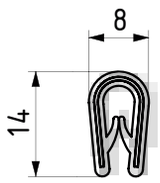

PRODUCT CODE	340.09.522
MATERIAL	PVC
COLOR	BLACK
R1	30
R2	40
R3	30
R4	-
DT	2.5 - 1 mm
PACKAGING(mt)	150

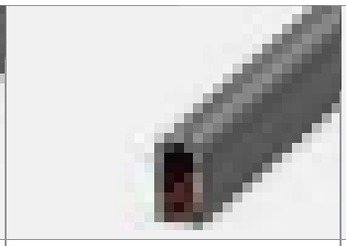

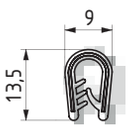

PRODUCT CODE	340.09.523
MATERIAL	PVC
COLOR	BLACK/RED
R1	50
R2	50
R3	30
R4	-
DT	3 - 1.5 mm
PACKAGING(mt)	150

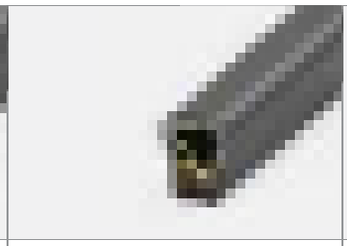

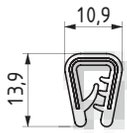

PRODUCT CODE	340.09.527
MATERIAL	PVC
COLOR	BLACK/YELLOW
R1	50
R2	60
R3	30
R4	-
DT	2.5 - 1.5 mm
PACKAGING(mt)	150

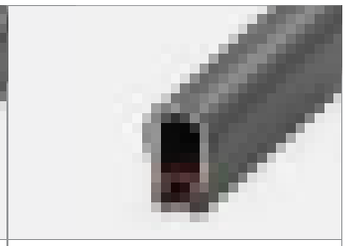

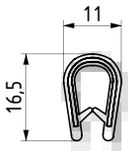

PRODUCT CODE	340.09.530
MATERIAL	PVC
COLOR	BLACK/RED
R1	30
R2	40
R3	30
R4	-
DT	4 - 2 mm
PACKAGING(mt)	100



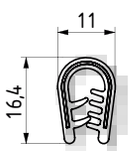

PRODUCT CODE	340.09.538
MATERIAL	EPDM
COLOR	BLACK/YELLOW
R1	50
R2	60
R3	40
R4	-
DT	4 - 2 mm
PACKAGING(mt)	100

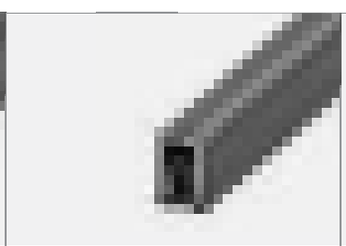

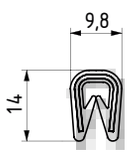

PRODUCT CODE	340.09.529
MATERIAL	EPDM
COLOR	BLACK
R1	50
R2	50
R3	30
R4	-
DT	3 - 2 mm
PACKAGING(mt)	100

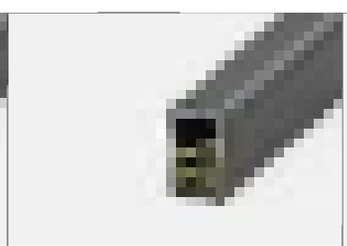

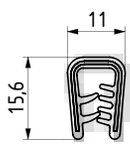

PRODUCT CODE	340.09.540
MATERIAL	EPDM
COLOR	BLACK/YELLOW
R1	50
R2	60
R3	40
R4	-
DT	4 - 1.5 mm
PACKAGING(mt)	100

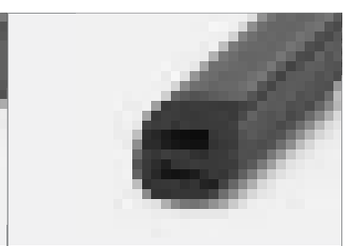

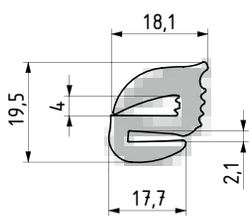

PRODUCT CODE	340.09.419
MATERIAL	EPDM
COLOR	BLACK
R1	70
R2	80
R3	
R4	
DT	3.5 mm
PACKAGING(mt)	50

tel | +90 212 721 44 44 fax | +90 212 721 44 45

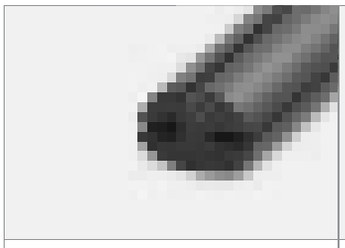

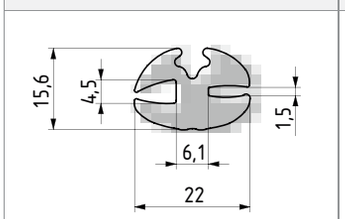

PRODUCT CODE	340.09.380
MATERIAL	EPDM
COLOR	BLACK
R1	40
R2	40
DT	4 - 1 mm
PACKAGING(mt)	50

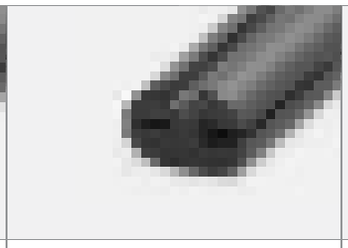

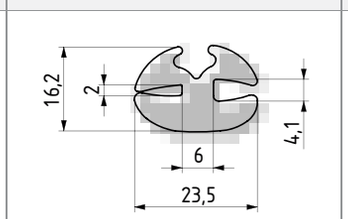

PRODUCT CODE	340.09.381
MATERIAL	EPDM
COLOR	BLACK
R1	40
R2	40
DT	3.5 - 1.5 mm
PACKAGING(mt)	50

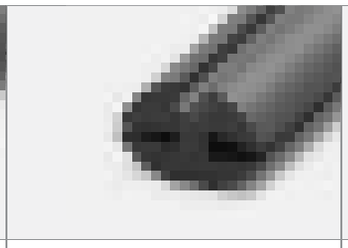

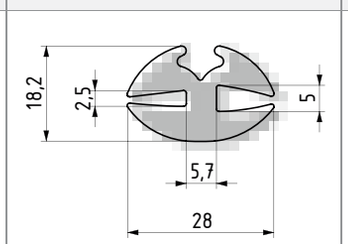

PRODUCT CODE	340.09.385
MATERIAL	EPDM
COLOR	BLACK
R1	45
R2	45
DT	4.5 - 2 mm
PACKAGING(mt)	50

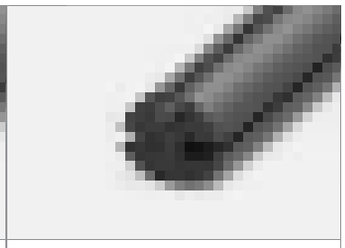

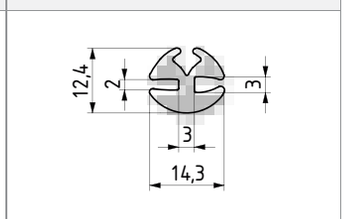

PRODUCT CODE	340.09.382
MATERIAL	EPDM
COLOR	BLACK
R1	30
R2	30
DT	2.5 - 1.5 mm
PACKAGING(mt)	100

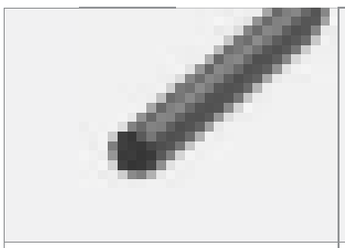

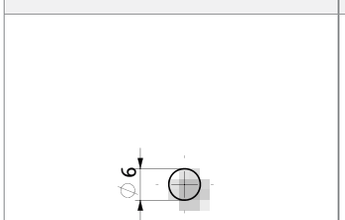

PRODUCT CODE	340.09.383
MATERIAL	EPDM
COLOR	BLACK
R1	-
R2	-
DT	-
PACKAGING(mt)	4x50

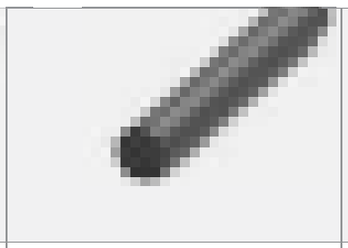

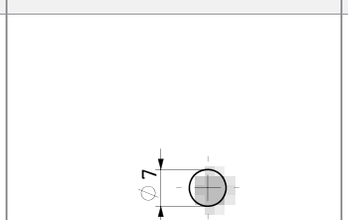

PRODUCT CODE	340.09.611
MATERIAL	EPDM
COLOR	BLACK
R1	-
R2	-
DT	-
PACKAGING(mt)	100

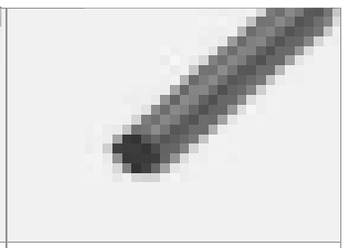

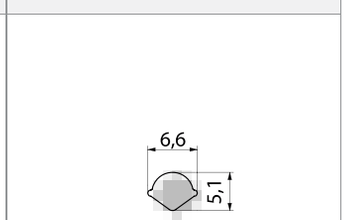

PRODUCT CODE	340.09.384
MATERIAL	EPDM
COLOR	BLACK
R1	-
R2	-
DT	-
PACKAGING(mt)	4x50

Note:
Zipper Cords needs to be ordered separately.

See below table to match with the gasket.

Gasket	Zipper Cord
340.09.380	340.09.383
340.09.381	340.09.383
340.09.385	340.09.611
340.09.382	340.09.384

GASKETS

ADHESIVE GASKETS

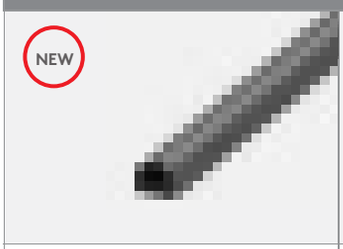

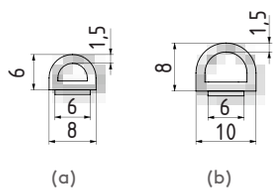

PRODUCT CODE	340.09.966
PRODUCT CODE	340.09.967
MATERIAL	EPDM
COLOR	BLACK
R1	
R2	
R3	
R4	
DT	1 mm
PACKAGING(mt)	200

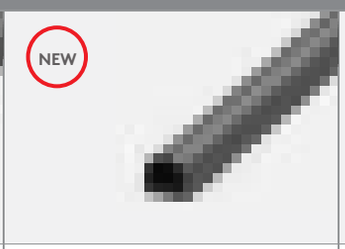

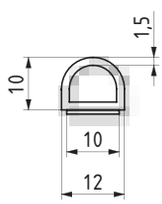

PRODUCT CODE	340.09.968
MATERIAL	EPDM
COLOR	BLACK
R1	
R2	
R3	
R4	
DT	1 mm
PACKAGING(mt)	100



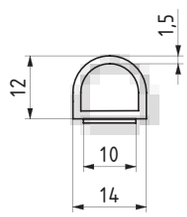

PRODUCT CODE	340.09.969
MATERIAL	EPDM
COLOR	BLACK
R1	
R2	
R3	
R4	
DT	1 mm
PACKAGING(mt)	100



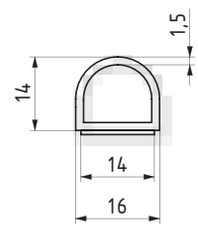

PRODUCT CODE	340.09.970
MATERIAL	EPDM
COLOR	BLACK
R1	
R2	
R3	
R4	
DT	1 mm
PACKAGING(mt)	100

U SEALS



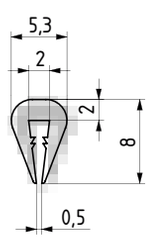

PRODUCT CODE	34001010
MATERIAL	PVC
COLOR	BLACK
R1	-
R2	-
R3	-
R4	-
DT	1 mm
PACKAGING(mt)	100



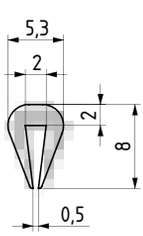

PRODUCT CODE	34001011
MATERIAL	PVC
COLOR	BLACK
R1	-
R2	-
R3	-
R4	-
DT	1 mm
PACKAGING(mt)	100



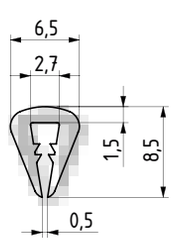

PRODUCT CODE	34001012
MATERIAL	PVC
COLOR	BLACK
R1	-
R2	-
R3	-
R4	-
DT	1 mm
PACKAGING(mt)	100



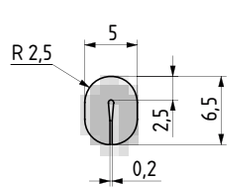

PRODUCT CODE	34001015
MATERIAL	PVC
COLOR	BLACK
R1	-
R2	-
R3	-
R4	-
DT	1 mm
PACKAGING(mt)	100

tel | +90 212 721 44 44 fax | +90 212 721 44 45

ADHESIVE CAST GASKET



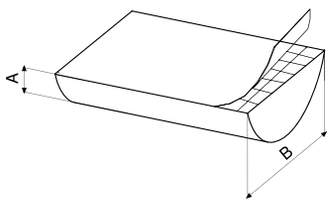

A MM	B MM	1300 POLYURETHANE	STANDARD ROLL LENGTH (M)
3	10	**1300.3.10**	50
3	15	**1300.3.15**	50
3	20	**1300.3.20**	50
4	10	**1300.4.10**	50
4	15	**1300.4.15**	50
4	20	**1300.4.20**	50
5	10	**1300.5.10**	50
5	15	**1300.5.15**	50
5	20	**1300.5.20**	50
6	10	**1300.6.10**	25
6	15	**1300.6.15**	25
6	20	**1300.6.20**	25
7	10	**1300.7.10**	25
7	15	**1300.7.15**	25
7	25	**1300.7.25**	25
8	10	**1300.8.10**	25
8	15	**1300.8.15**	25
8	20	**1300.8.20**	25
9	15	**1300.9.15**	25
9	20	**1300.9.20**	25
10	15	**1300.10.15**	25
10	20	**1300.10.20**	25

ADHESIVE GASKET



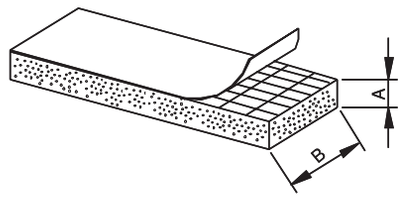

A MM	B MM	1100 POLYETHYLENE	1200 EPDM	STANDARD ROLL LENGTH (M)
2	10	**1100.2.10**	**1200.2.10**	**10**
2	15	**1100.2.15**	**1200.2.15**	**10**
2	20	**1100.2.20**	**1200.2.20**	**10**
2	25	**1100.2.25**	**1200.2.25**	**10**
2	30	**1100.2.30**	**1200.2.30**	**10**
3	10	**1100.3.10**	**1200.3.10**	**10**
3	15	**1100.3.15**	**1200.3.15**	**10**
3	18	**1100.3.18**	**1200.3.18**	**10**
3	20	**1100.3.20**	**1200.3.20**	**10**
3	25	**1100.3.25**	**1200.3.25**	**10**
3	30	**1100.3.30**	**1200.3.30**	**10**
3	40	**1100.3.40**	**1200.3.40**	**10**
5	10	**1100.5.10**	**1200.5.10**	**10**
5	13	**1100.5.13**	**1200.5.13**	**10**
5	15	**1100.5.15**	**1200.5.15**	**10**
5	18	**1100.5.18**	**1200.5.18**	**10**
5	20	**1100.5.20**	**1200.5.20**	**10**
5	25	**1100.5.25**	**1200.5.25**	**10**
5	30	**1100.5.30**	**1200.5.30**	**10**
5	35	**1100.5.35**	**1200.5.35**	**10**
5	40	**1100.5.40**	**1200.5.40**	**10**
5	50	**1100.5.50**	**1200.5.50**	**10**
8	8	**1100.8.8**	**1200.8.8**	**10**
8	10	**1100.8.10**	**1200.8.10**	**10**
8	12	**1100.8.12**	**1200.8.12**	**10**
8	15	**1100.8.15**	**1200.8.15**	**5**
8	20	**1100.8.20**	**1200.8.20**	**5**
8	25	**1100.8.25**	**1200.8.25**	**5**
8	30	**1100.8.30**	**1200.8.30**	**5**
8	40	**1100.8.40**	**1200.8.40**	**5**
10	10	**1100.10.10**	**1200.10.10**	**5**
10	12	**1100.10.12**	**1200.10.12**	**5**
10	15	**1100.10.15**	**1200.10.15**	**5**
10	20	**1100.10.20**	**1200.10.20**	**5**
10	25	**1100.10.25**	**1200.10.25**	**5**
10	30	**1100.10.30**	**1200.10.30**	**5**
10	35	**1100.10.35**	**1200.10.35**	**5**
10	40	**1100.10.40**	**1200.10.40**	**5**

FAST FIND INDEX

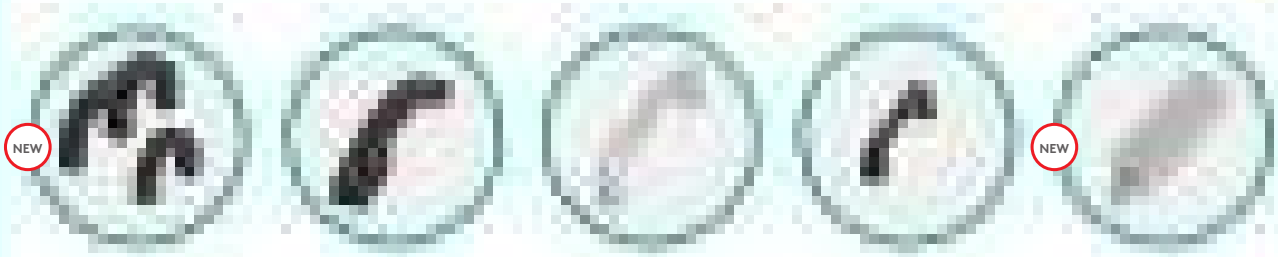

404 404 405 405 406



406 407 407 408 408



409 409 410 410 411

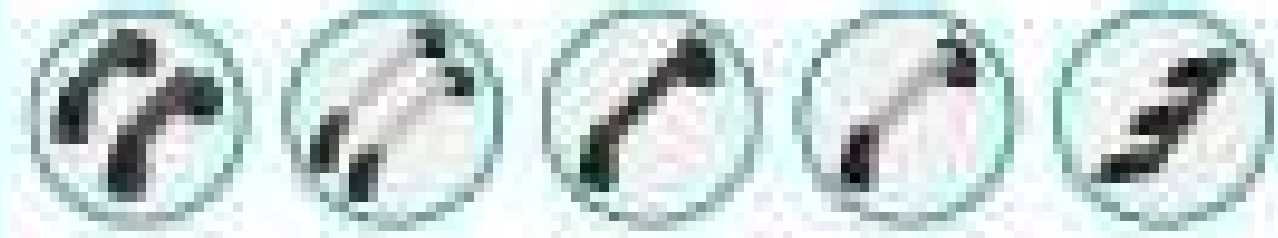

412 413 414 414 415



416 417 418 405 419



HANDLES

402-419

mesan
ESSENTRA COMPONENTS

e-mail | info@mesanlocks.com web | www.mesanlocks.com

FINGER HANDLE — 185

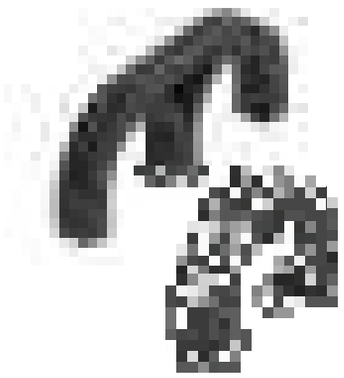

NEW

V: 1

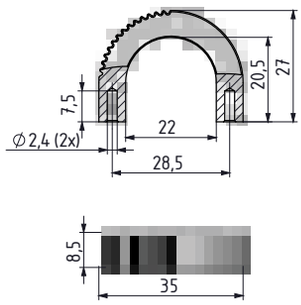

V: 2

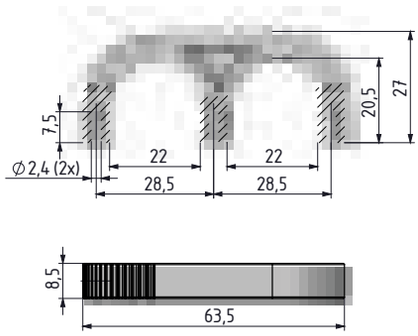

MATERIAL
Polyamide DIN-EN ISO 1043-1
PA 6 GFR 30

MATERIAL	M	FINISH	F
Plastic	2	Black	2
		Grey	8
		Red	9

OPTION	O
Only Handle	0
Handle + Screw, Washer	1

Group Code	Material	Finish	Version	Option
185	2	F	V	O

COVER HANDLE — 286



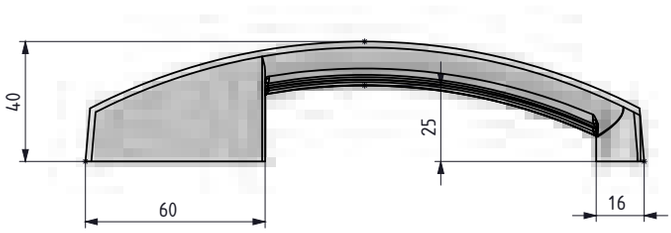

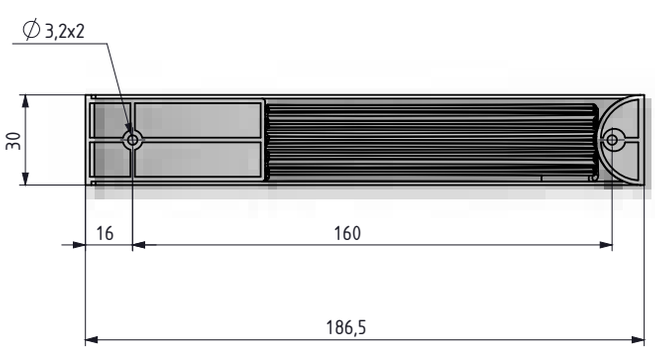

- Stylish
- Internal fixing with two screws

MATERIAL
Polyamide DIN-EN ISO 1043-1
PA 6 GFR 30

tel | +90 212 721 44 44 fax | +90 212 721 44 45

084 MILLENIUM HANDLE

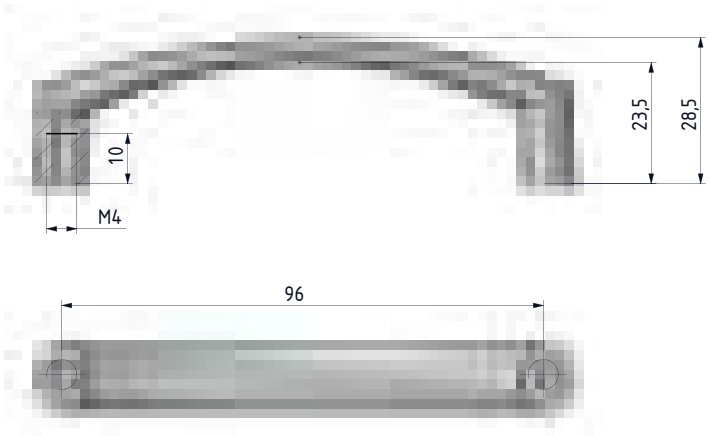



MATERIAL	M	FINISH	F
Zamak	1	Chrome plated	1
		Black coated	2

Group Code	Material	Finish
084	M	F

- Stylish handle for wooden furniture

MATERIAL
Zamak DIN-EN 1774-ZnAl4Cu1

FINISH
Chrome or black coated

085 DRAWER HANDLE

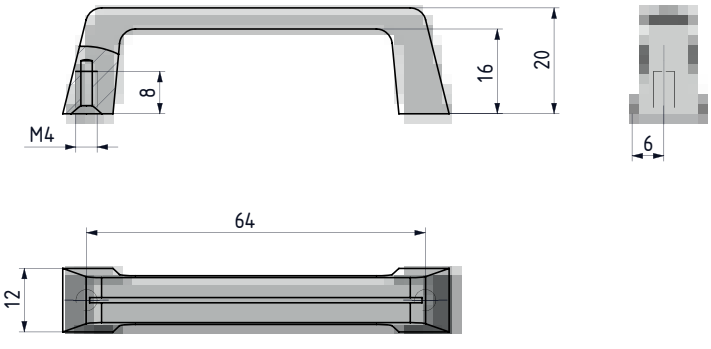

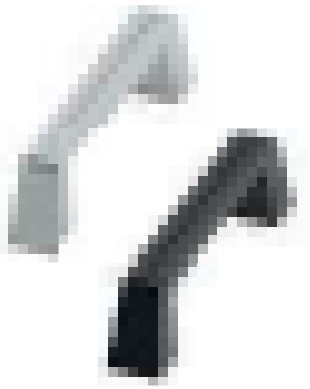

MATERIAL	M	FINISH	F
Zamak	1	Chrome plated	1
		Black coated	2

Group Code	Material	Finish
085	M	F

- Stylish handle for wooden furniture and keyboard shelf in rack cabinets

MATERIAL
Zamak DIN-EN 1774-ZnAl4Cu1

FINISH
Chrome or black coated

ALUMINIUM HANDLE

083



NEW

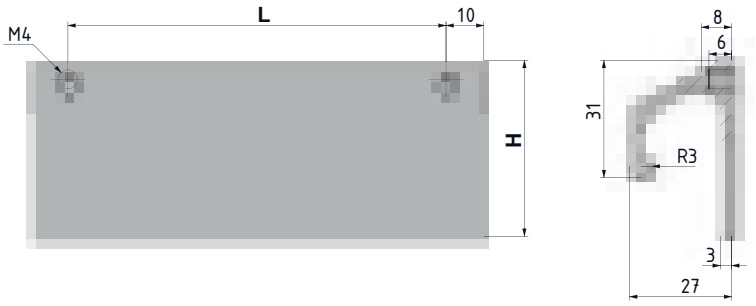

H	L
46	100
	150
	200

MATERIAL	M	FINISH	F
Aluminium	5	Chrome plated	1
		Black coated (RAL 9005)	2
		Matt anodized	7

Group Code	Material	Finish	Height	Length
083	5	F	46	L

MATERIAL
Aluminium

FINISH
Chrome plated, matt anodized or black coated

ALUMINIUM HANDLE

183



NEW

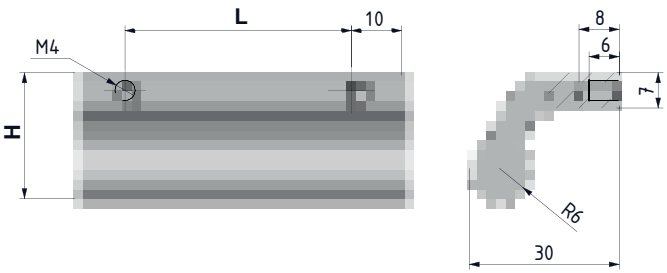

H	L
25	30
	45
	64
	70
	80
	90
	105

MATERIAL	M	FINISH	F
Aluminium	5	Chrome plated	1
		Black coated (RAL 9005)	2
		Matt anodized	7

Group Code	Material	Finish	Height	Length
183	5	F	25	L

MATERIAL
Aluminium

FINISH
Chrome plated, matt anodized or black coated

tel | +90 212 721 44 44 fax | +90 212 721 44 45

184 METAL HANDLE

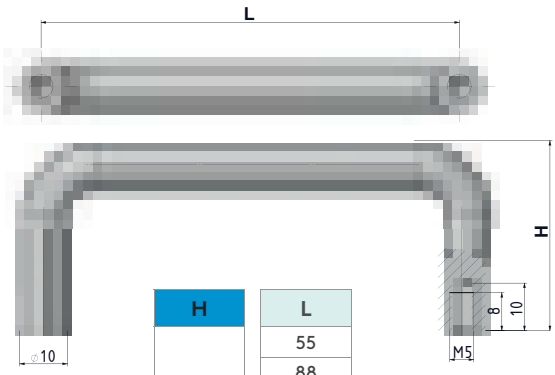

H	L
40	55
	88
	100
	120
	180
	200
	235
	250

MATERIAL	M	FINISH	F
Steel	6	Chrome plated	1
Aluminium	5	Matt anodized	7
Stainless Steel	4	Hand polish	0

Group Code	Material	Finish	Height	Length
184	M	F	40	L

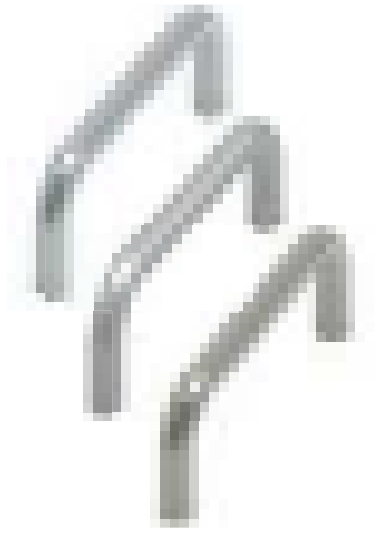

MATERIAL
Steel, Aluminium ,Stainless Steel

FINISH
Chrome plated, matt anodized
or black coated

484 METAL HANDLE

NEW

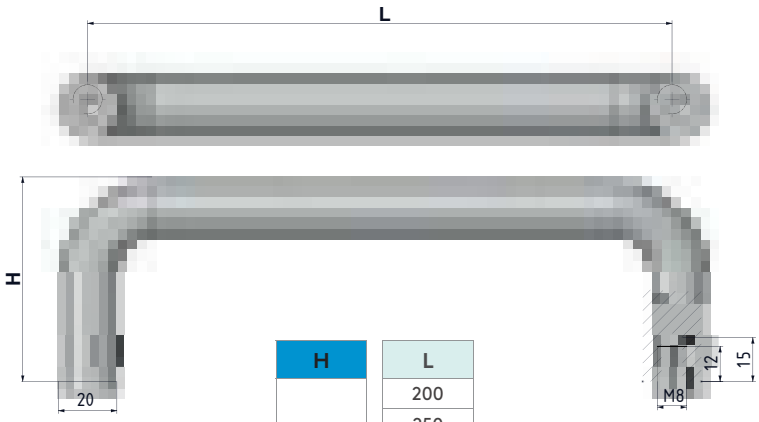

H	L
70	200
	250
	300
	350
	400

MATERIAL	M	FINISH	F
Steel	6	Chrome plated	1
Aluminium	5	Matt anodized	7
Stainless Steel	4	Hand polish	0

Group Code	Material	Finish	Height	Length
484	M	F	70	L

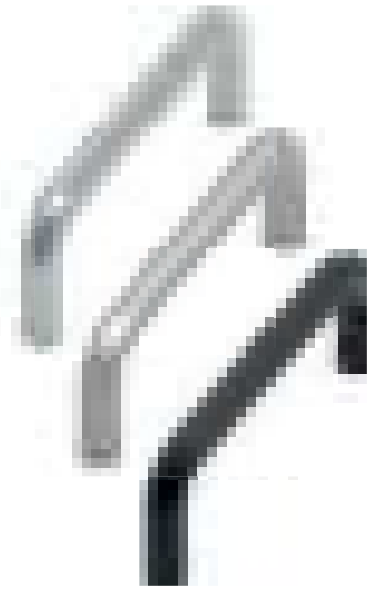

MATERIAL
Steel, Aluminium ,Stainless Steel

FINISH
Chrome plated, matt anodized
or black coated

ALUMINIUM HANDLE

884

NEW

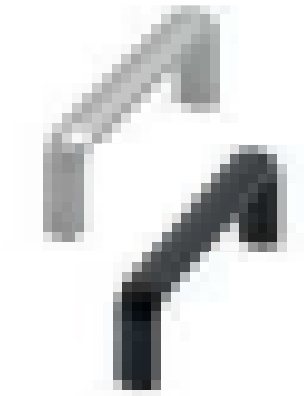

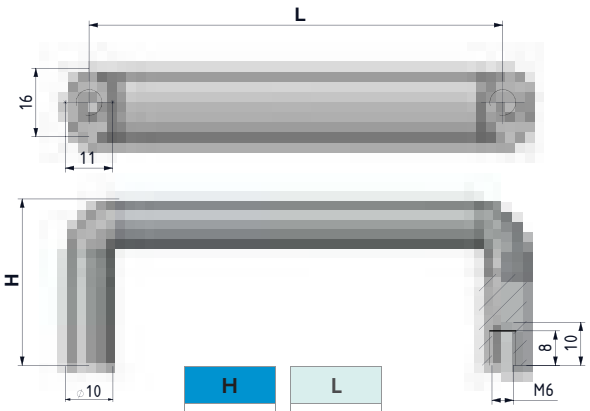

H	L
38	30
	64
	96
	128

MATERIAL
Aluminium

FINISH
Matt anodized or black coated

MATERIAL	M	FINISH	F
Aluminium	5	Black coated (RAL 9005)	2
		Matt anodized	7

Group Code	Material	Finish	Height	Length
884	5	F	38	L

METAL HANDLE

284

NEW





MATERIAL	M	FINISH	F	H	L
Steel	6	Chrome plated	1	70	250
				70	300
				70	400
				70	500
				40	80
				40	100
Stainless steel	4	Hand polish	0	35	80
				35	100

MATERIAL
Steel ,Stainless Steel

FINISH
Chrome plated, hand polish

Group Code	Material	Finish	Height	Length
284	M	F	H	L

tel | +90 212 721 44 44 fax | +90 212 721 44 45

384 METAL HANDLE

NEW

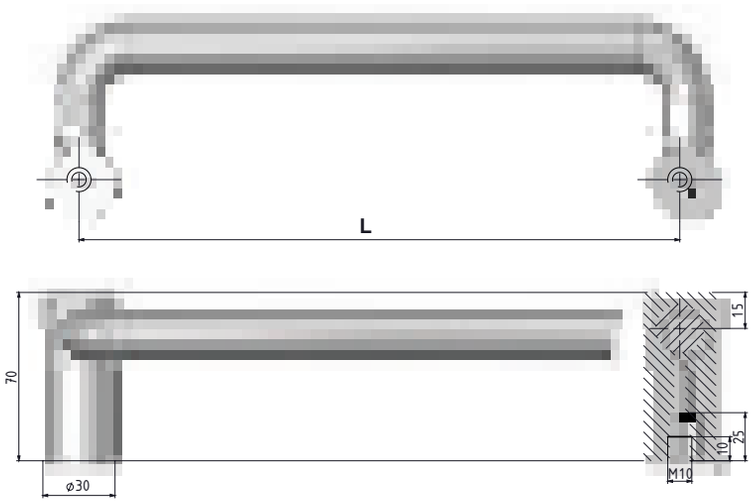

H	L
70	250
	350

MATERIAL	M	FINISH	F
Steel	6	Chrome plated	1
Stainless Steel	4	Hand polish	0

Group Code	Version	Material	Finish	Height	Length
384	1	M	F	70	L



MATERIAL
Steel, Stainless Steel

FINISH
Chrome plated, hand polish

384 METAL HANDLE

NEW

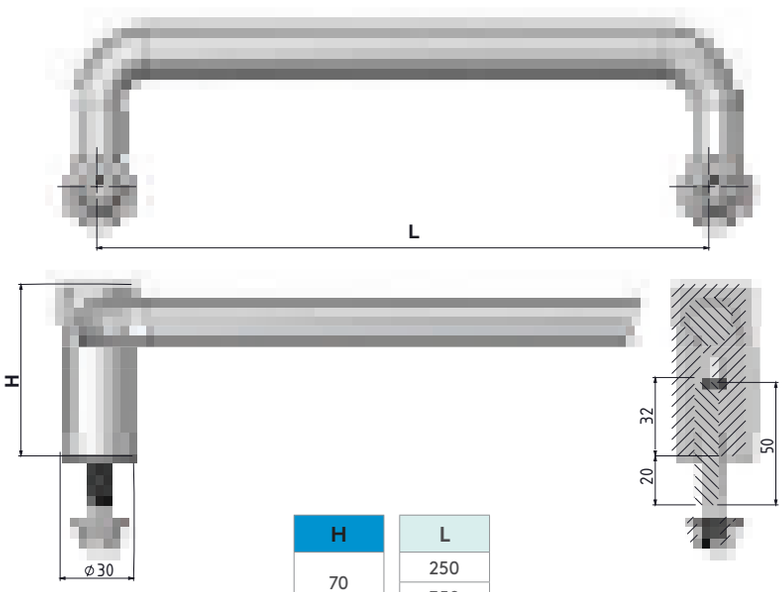

H	L
70	250
	350

MATERIAL	M	FINISH	F
Steel	6	Chrome plated	1
Stainless Steel	4	Hand polish	0

Group Code	Version	Material	Finish	Height	Length
384	2	M	F	70	L



MATERIAL
Steel, Stainless Steel

FINISH
Chrome plated, hand polish

FOLDABLE METAL HANDLE

584

NEW

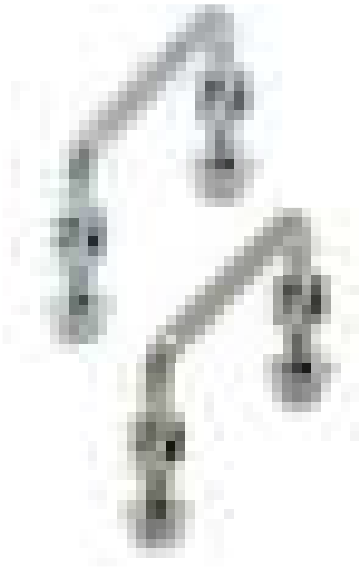

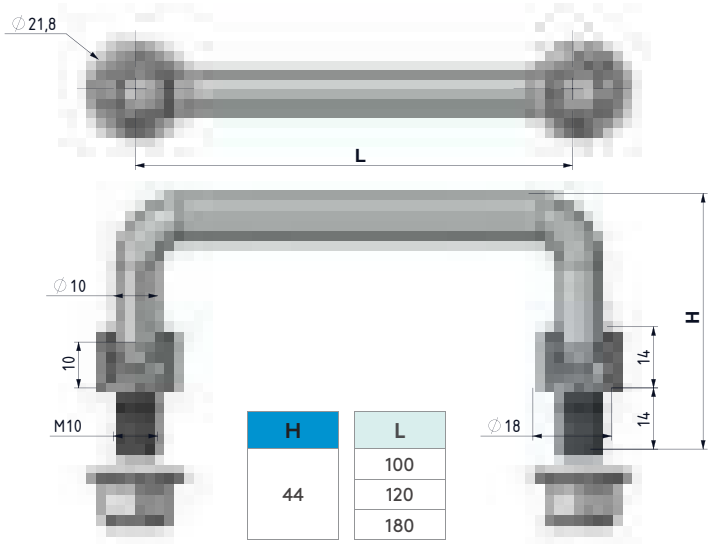

H	L
44	100
	120
	180

MATERIAL
Steel ,Stainless Steel

FINISH
Chrome plated, hand polish

MATERIAL	M	FINISH	F
Steel	6	Chrome plated	1
Stainless Steel	4	Hand polish	0

Group Code	Material	Finish	Height	Length
584	M	F	44	L

METAL HANDLE

684

NEW

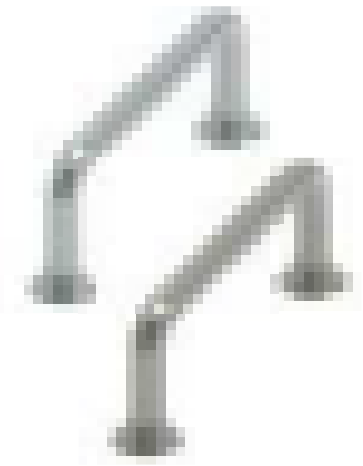

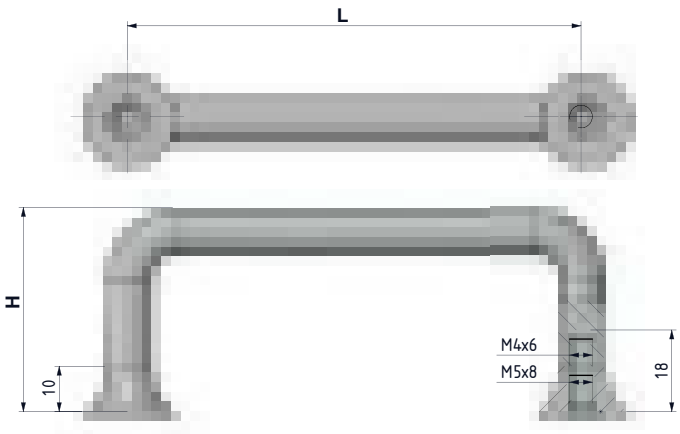

H	L
40	100
	200

MATERIAL
Steel ,Stainless Steel

FINISH
Chrome plated, hand polish

MATERIAL	M	FINISH	F
Steel	6	Chrome plated	1
Stainless Steel	4	Hand polish	0

Group Code	Material	Finish	Height	Length
684	M	F	40	L

tel | +90 212 721 44 44 fax | +90 212 721 44 45

784 METAL HANDLE

NEW

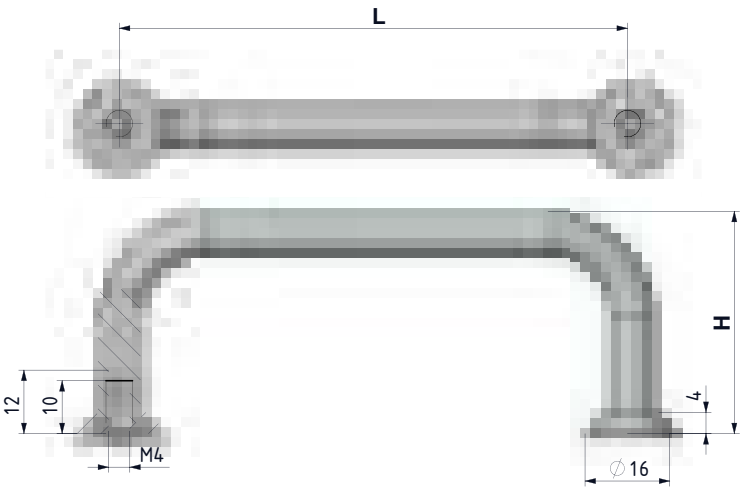

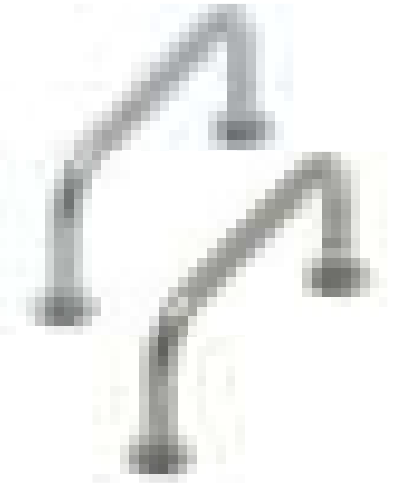

MATERIAL
Steel ,Stainless Steel

FINISH
Chrome plated, hand polish

H	L
35	96
	100
	120
	128

MATERIAL	M	FINISH	F
Steel	6	Chrome plated	1
Stainless Steel	4	Hand polish	0

Group Code	Material	Finish	Height	Length
784	M	F	35	L

COVER HANDLE 086

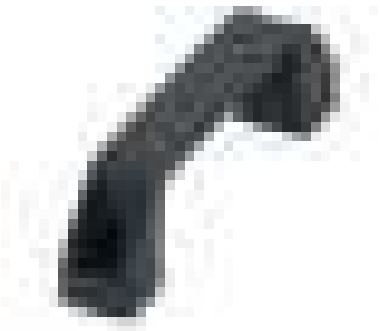

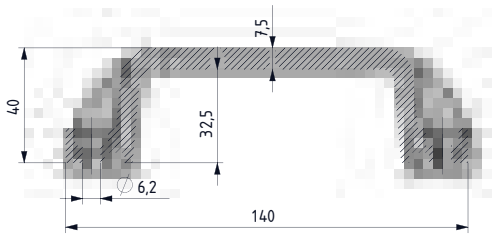

V: 1

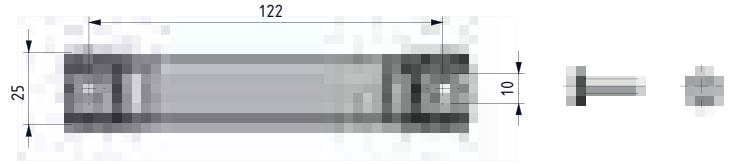

V: 2

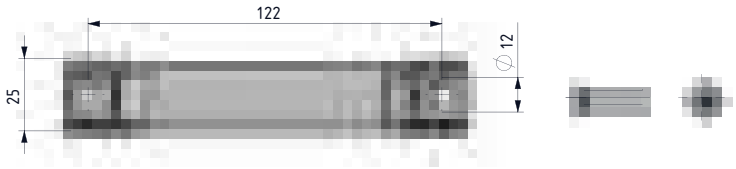

Group Code	Version
086	V

- Two different fixing types

MATERIAL
Polyamide DIN-EN ISO 1043-1
PA 6 GFR 30

⚠ This product can be produced as anti-bacterial with PA6 GFR 30% + 6% content. The raw material used has been tested in the DIN EN ISO 846 standard.

COVER HANDLE 186



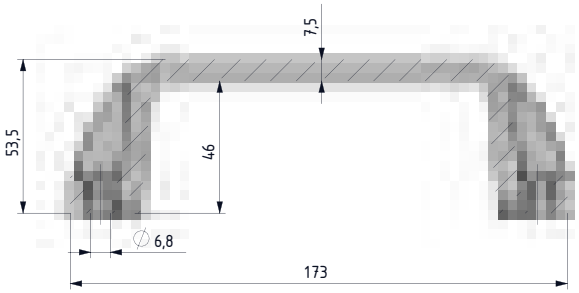

V: 1

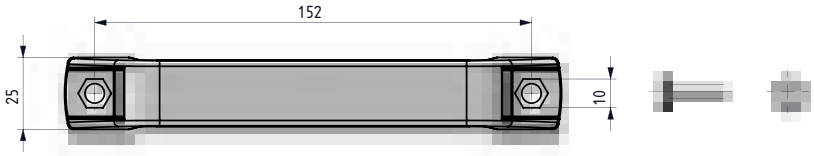

V: 2

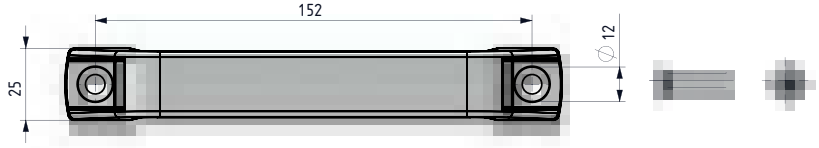

Group Code	Version
186	V

- Two different fixing types

MATERIAL
Polyamide DIN-EN ISO 1043-1
PA 6 GFR 30

tel | +90 212 721 44 44 fax | +90 212 721 44 45

087 COVER HANDLE

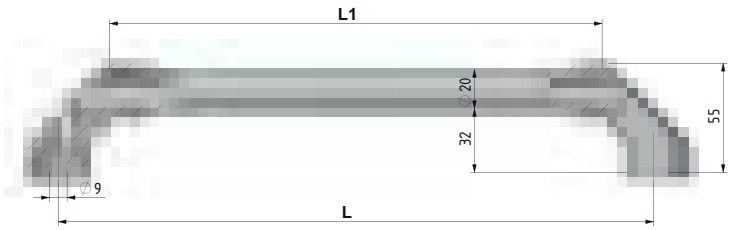



L1	L
148	200
248	300
348	400
448	500

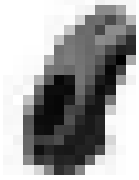

350002002Y
Side part

Group Code	Length
087	L



- Matte anodized aluminium
- For different colours and dimensions contact Essentra

MATERIAL
FIXING PART: Polyamide DIN-EN ISO 1043-1 PA 6 GFR 30
HANDLE: Aluminium

287 COVER HANDLE

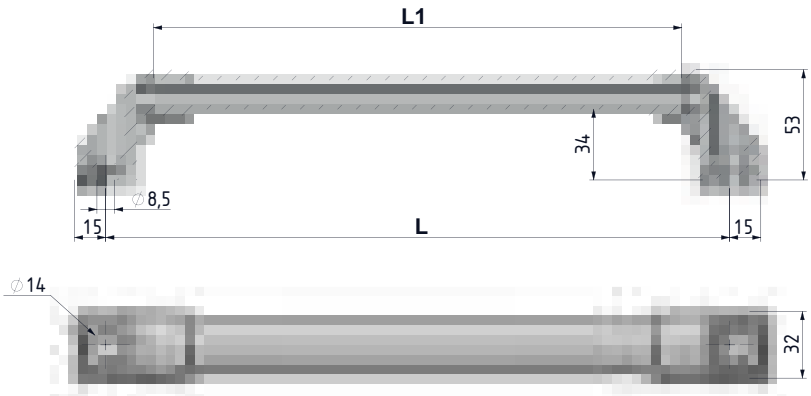

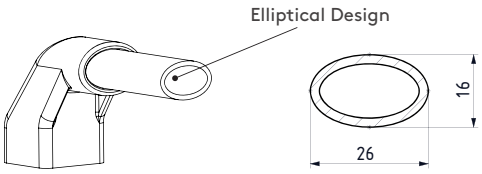

L1	L
154	200
254	300
354	400
454	500

Group Code	Length
287	L



- Ergonomic elliptical geometry
- Matte anodized aluminium
- For different colours and dimensions contact Essentra

MATERIAL
FIXING PART: Polyamide DIN-EN ISO 1043-1 PA 6 GFR 30
HANDLE: Aluminium

COVER HANDLE 187



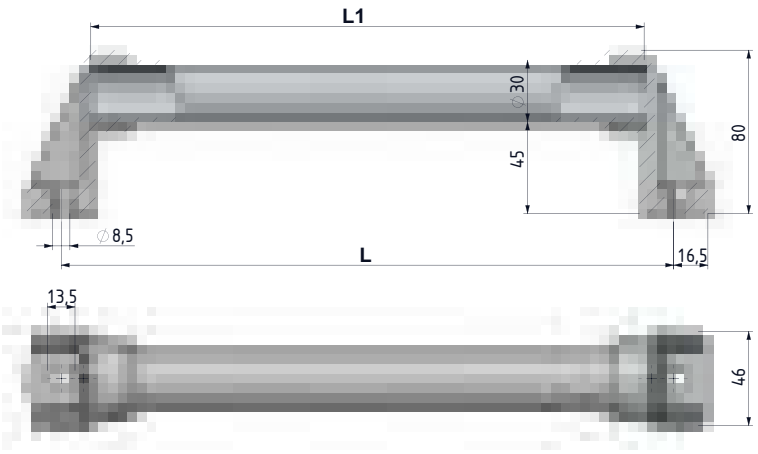

L1	L
269	300
369	400
469	500
569	600
669	700
769	800
869	900

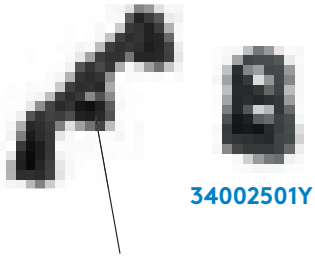

34002501Y

! Middle part should be used for lengths greater than 900 mm

- Plastic-coated steel tube
- Centre supports should be used for handle lengths of 1000 mm or more
- For different colours and dimensions contact Essentra

MATERIAL
FIXING PART: Polyamide DIN-EN ISO 1043-1 PA 6 GFR 30
HANDLE: Plastic coated steel

Group Code	Length
187	L

COVER HANDLE 487



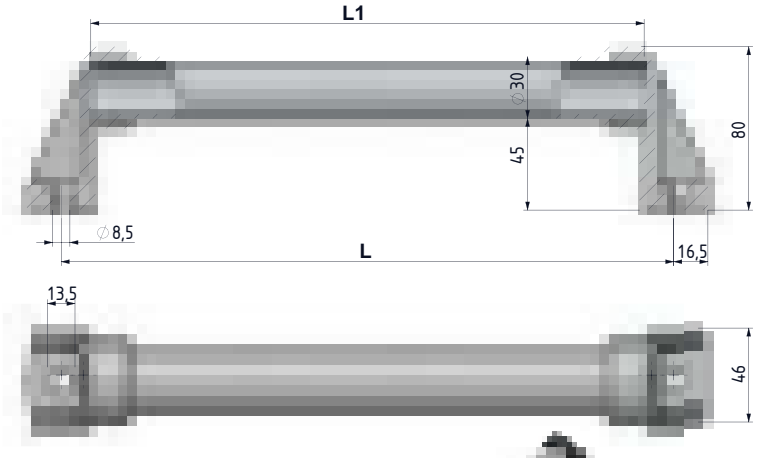

L1	L
269	300
369	400
469	500
569	600
669	700
769	800
869	900

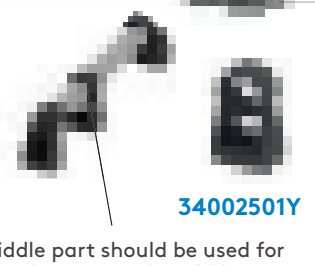

34002501Y

! Middle part should be used for lengths greater than 900 mm

- Stainless steel handle
- Centre supports should be used for handle lengths of 1000 mm or more
- For different colours and dimensions contact Essentra

MATERIAL
FIXING PART: Polyamide DIN-EN ISO 1043-1 PA 6 GFR 30
HANDLE: Stainless steel

Group Code	Length
487	L

tel | +90 212 721 44 44 fax | +90 212 721 44 45

387 COVER HANDLE

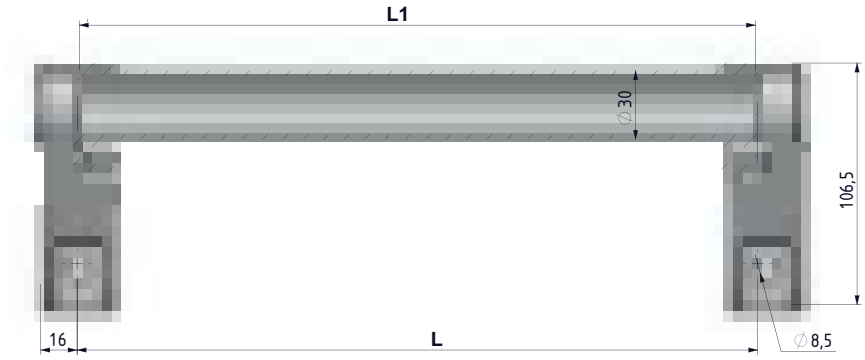

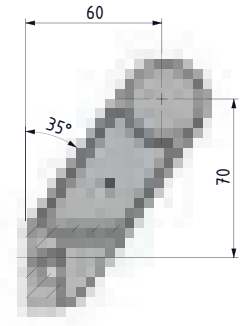



- Plastic-coated steel tube
- Centre supports should be used for handle lengths of 1000 mm or more
- For different colours and dimensions contact Essentra

MATERIAL

FIXING PART:	Polyamide DIN-EN ISO 1043-1 PA 6 GFR 30
HANDLE:	Plastic-coated steel

L1	L
298	300
398	400
498	500
598	600
698	700
798	800
998	1000

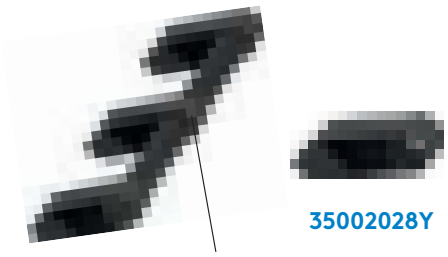

35002028Y

! Middle part should be used for lengths greater than 1000 mm

Group Code	Length
387	L

FLUSH SPRING HANDLE

082



NEW

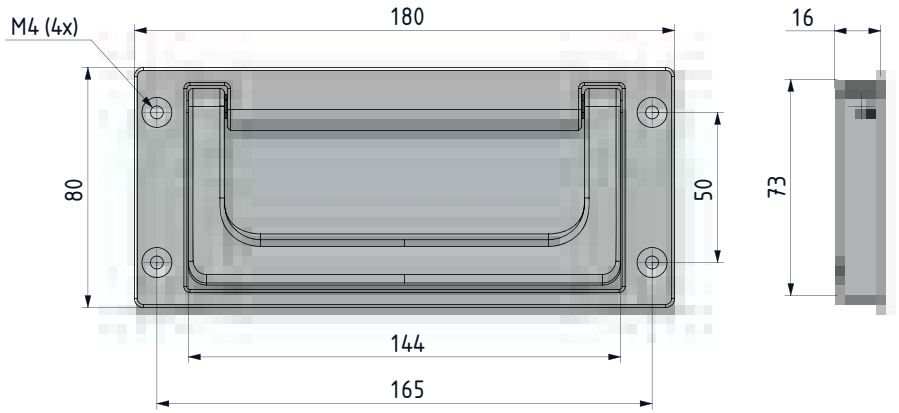

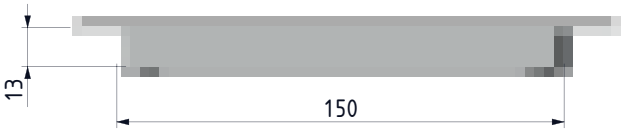

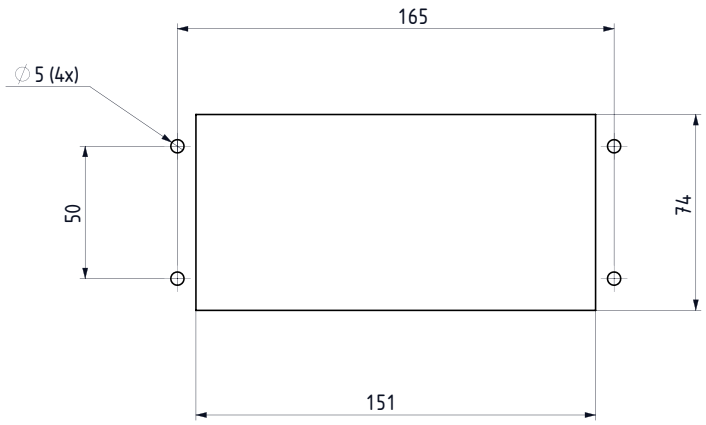

Cut out

MATERIAL
BODY: Aluminium
HANDLE: Aluminium

FINISH
Black coated

Group Code	Material	Finish
082	5	2

tel | +90 212 721 44 44 fax | +90 212 721 44 45

374 COVER PULL (SNAP-IN)

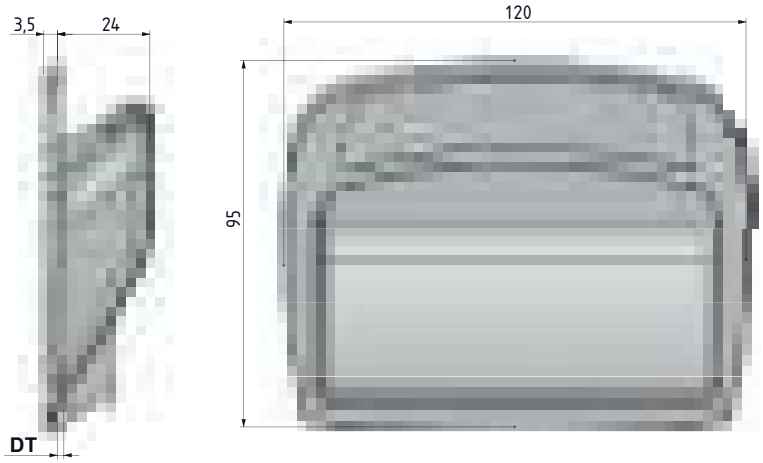



- Easy assembly by clips
- For custom logo and colors please contact Essentra

MATERIAL
ABS

⚠

This product can be produced as anti-bacterial with PA6 GFR 30% + 6% content. The raw material used has been tested in the DIN EN ISO 846 standard.

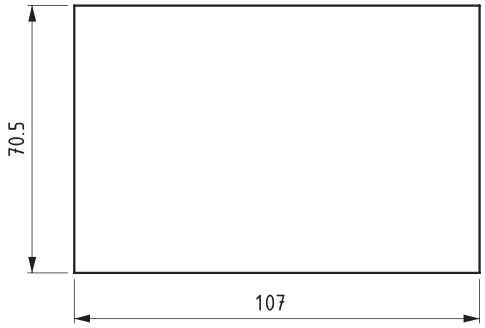

Cut out

DOOR THICKNESS	DT
0.8 -1.4 mm	15
1.5 - 2.2 mm	22

Group Code	Door Thickness
374	DT

COVER PULL (SNAP-IN) 274



- Flush design
- Easy assembly by clips

MATERIAL
ABS

V: 1

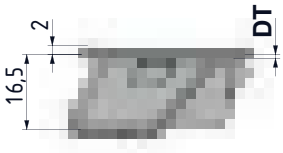



V: 2

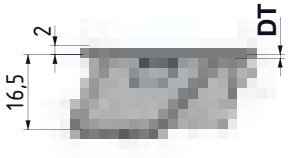

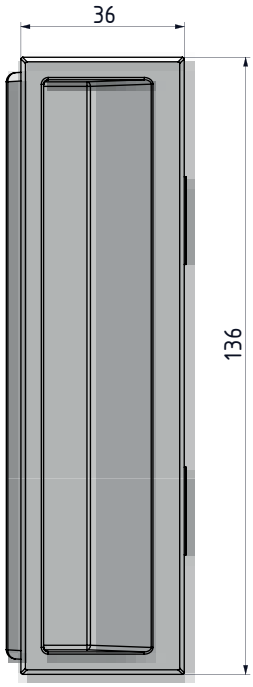

DOOR THICKNESS	DT
0.8 -1.4 mm	15
1.5 - 2.2 mm	22

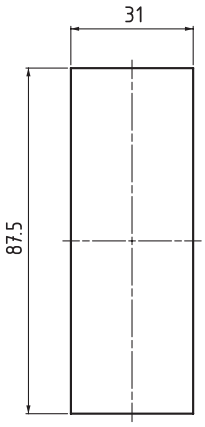

Cut out

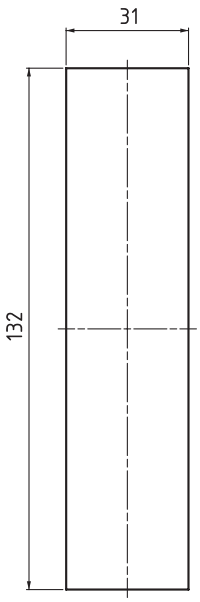

Cut out

Group Code	Version	Door Thickness
274	V	DT

tel | +90 212 721 44 44 fax | +90 212 721 44 45

074 COVER PULL (SNAP-IN)

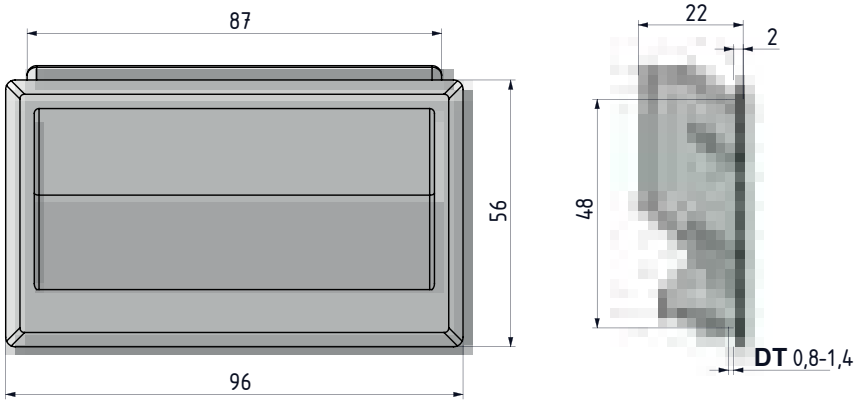



Cut out

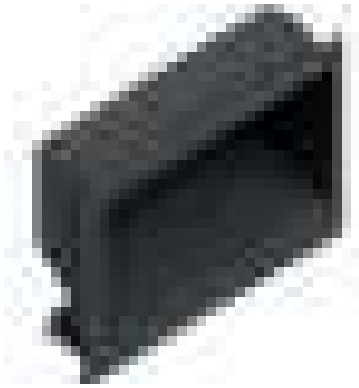

- For large door
- Easy assembly by clips

MATERIAL
ABS

⚠

This product can be produced as anti-bacterial with PA6 GFR 30% + 6% content. The raw material used has been tested in the DIN EN ISO 846 standard.

174 COVER PULL (SNAP-IN)

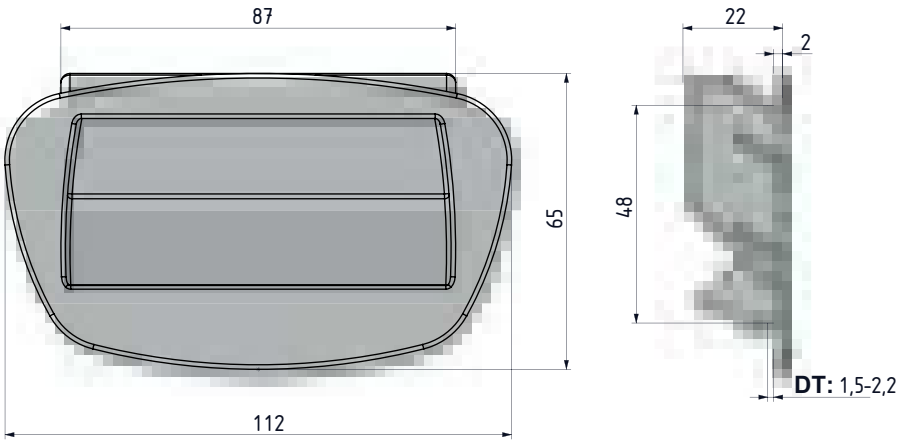



Geçiş Ölçüsü



- For large door
- Easy assembly by clips

MATERIAL
ABS

⚠

This product can be produced as anti-bacterial with PA6 GFR 30% + 6% content. The raw material used has been tested in the DIN EN ISO 846 standard.

FAST FIND INDEX


NEW
422-423


424


425


426


427


428

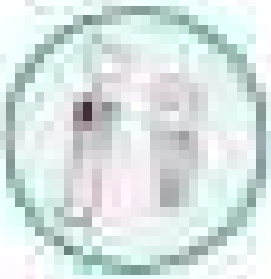
429

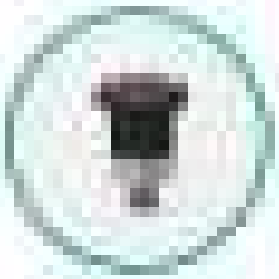
430

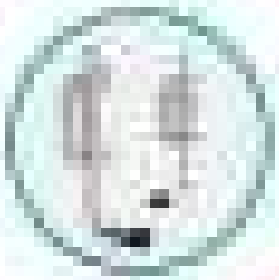
431

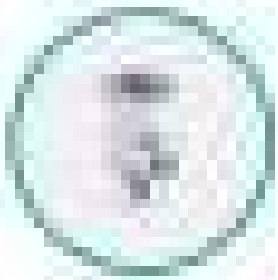
432

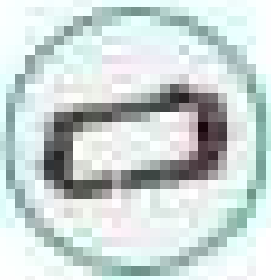
433

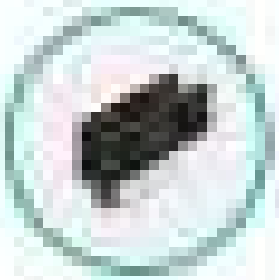
433

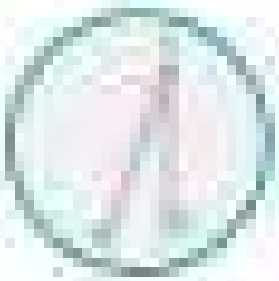
434

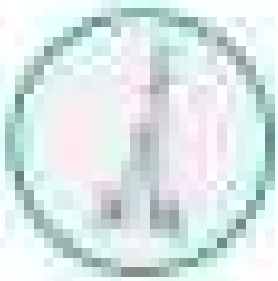
435

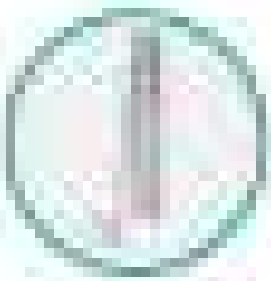
436


437

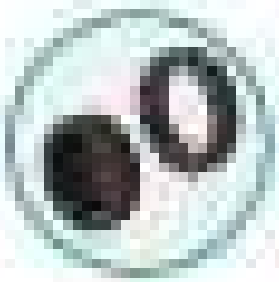
438


439

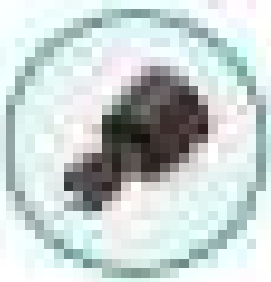
440


441



ACCESSORIES

420-441

mesan
ESSENTRA COMPONENTS

e-mail | info@mesanlocks.com web | www.mesanlocks.com

VENTILATION SHUTTER 2300

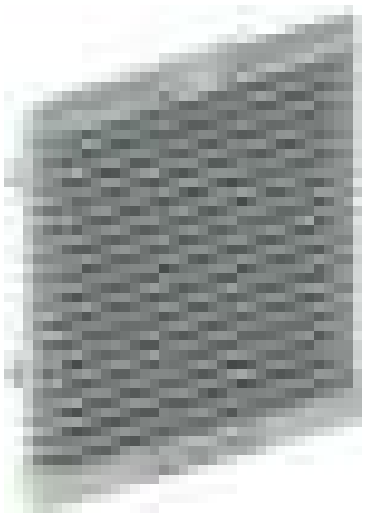

NEW

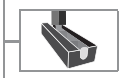

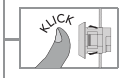

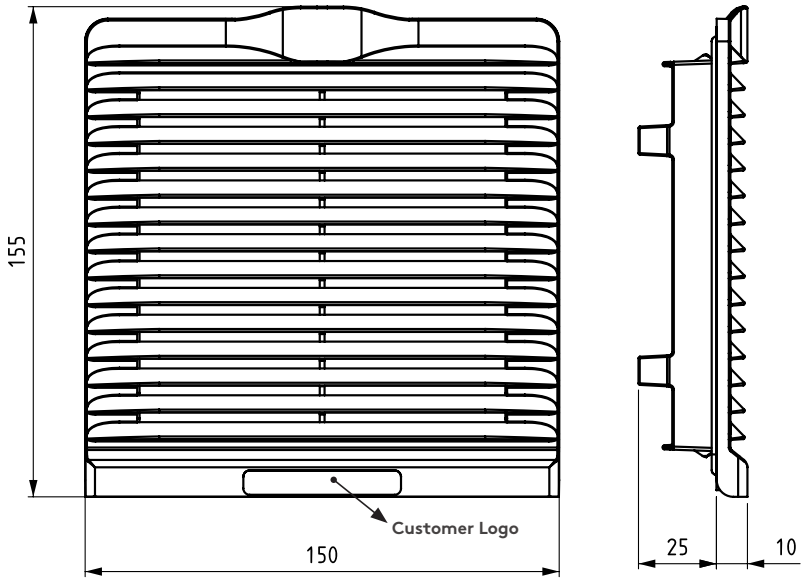

- Ergonomic and modern design
- Quick assembly by clips
- Easy to open cover
- Suitable sheet thickness is between 1.2 mm and 2.4 mm
- Optional foam gasketing
- For different color requests, please contact our sales team

MATERIAL
ABS

COLORS
RAL 7035, RAL 7032, RAL 9005

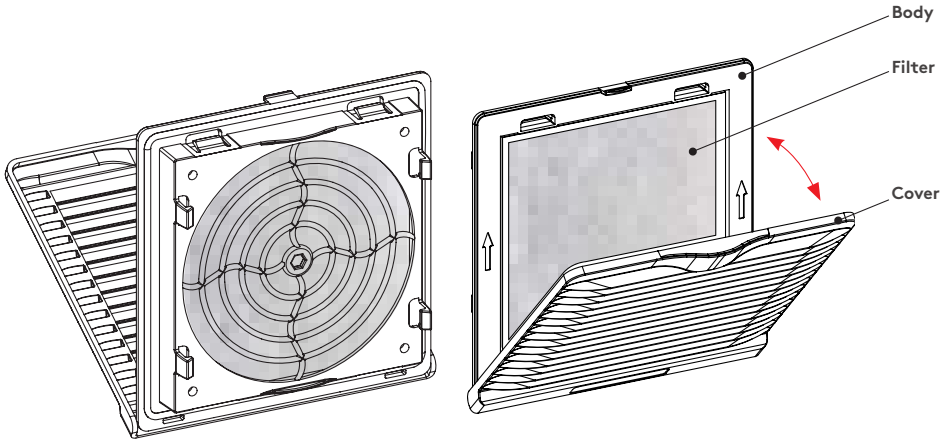



tel | +90 212 721 44 44 fax | +90 212 721 44 45

FILTER TYPES (please order separately)

Eco Filter

Part Code:
340.02.910

Material : Polyester Elyaf
Thickness : 10 mm

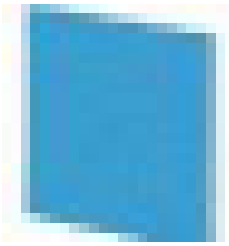

G2 Filter

Part Code:
340.02.911

Material	: Polyester Fiber
Thickness	: 10 mm
Maximum operating temperature:	100° C
Preffered air velocity	: 1,5 m/s
Initial pressure drop	: 15 Pa
Average gravimetric efficiency	: 79,5%
Classification (EN 779:2012)	: G2
Dust holding capacity	: 489 g/m2
Flame resistant	: F1 - DIN.53438

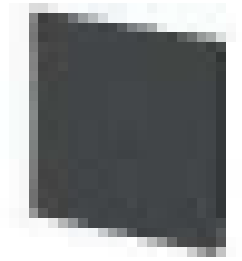

G3 Filter

Part Code:
340.02.912

Material	: Polyurethane
Thickness	: 10 mm
Maximum operating temperature:	80° C
Preffered air velocity	: 1,5 m/s
Initial pressure drop	: 33 Pa
Average gravimetric efficiency	: 82 %
Classification (EN 779:2012)	: G3
Dust holding capacity	: 300 g/m2
Flame resistant	: Self-extinguishing

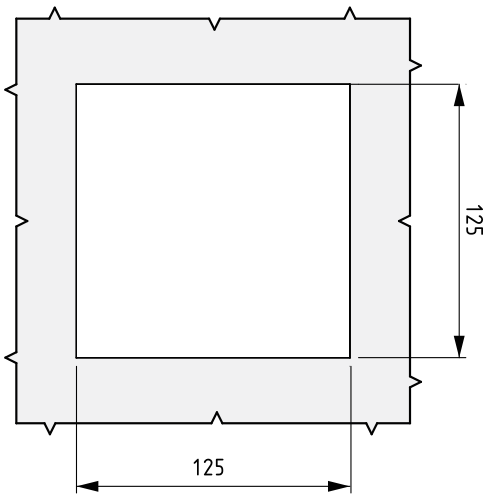

Cut out

COLORS	FILTER TYPE	PRODUTC CODE
RAL 7035	No Filter	2300.2.01.00
	Eco Filter	2300.2.01.01
	G2 Filter	2300.2.01.02
	G3 Filter	2300.2.01.03
RAL 7032	No Filter	2300.2.02.00
	Eco Filter	2300.2.02.01
	G2 Filter	2300.2.02.02
	G3 Filter	2300.2.02.03
RAL 9005	No Filter	2300.2.03.00
	Eco Filter	2300.2.03.01
	G2 Filter	2300.2.03.02
	G3 Filter	2300.2.03.03

DRAWING POCKET (A4) 2150



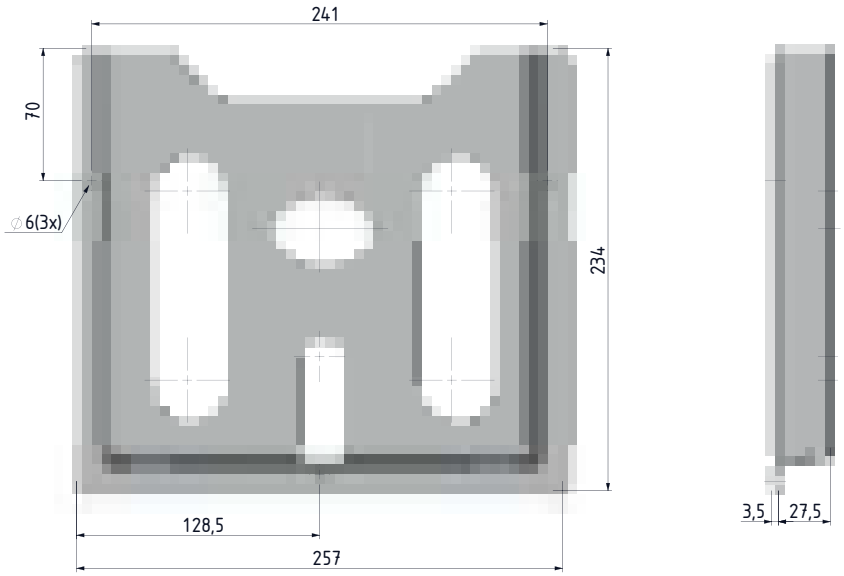

- For A4 size documents.Self adhesive. For special colours or logo,please contact Essentra

MATERIAL
ABS

COLOR
RAL 7035

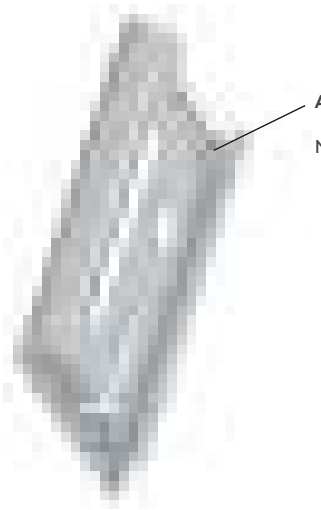

Adhesive

Non adhesive is possible

DRAWING POCKET (A5) 2152

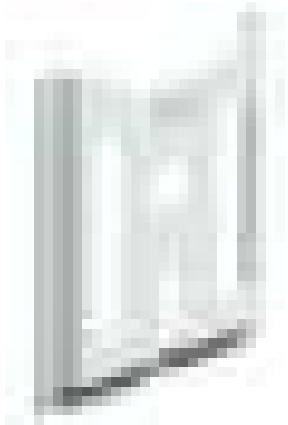

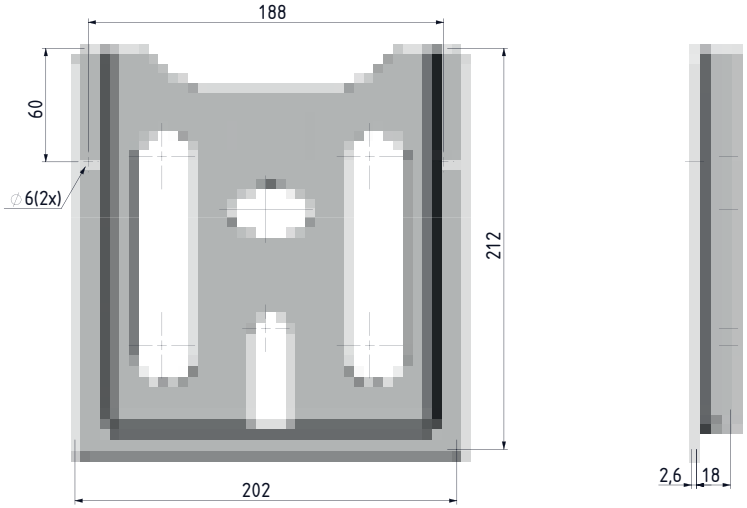

- For A5 size documents.Self adhesive. For special colours or logo,please contact Essentra

MATERIAL
ABS

COLOR
RAL 7035

tel | +90 212 721 44 44 fax | +90 212 721 44 45

2220 CIRCULAR INSPECTION WINDOW

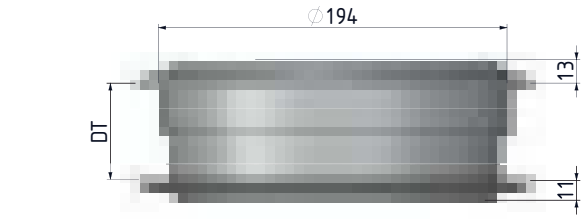

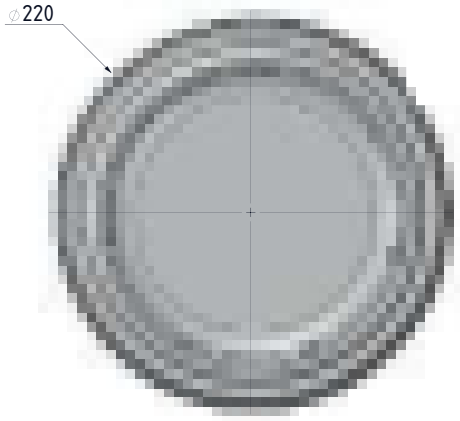

DT
30
40
50
60



- Visual inspection of HVAC enclosures
- Adjustable for 30-60 mm isolated doors
- Mounting with 7 screws

MATERIAL

WINDOW:	Polycarbon
GASKET:	Termo rubber

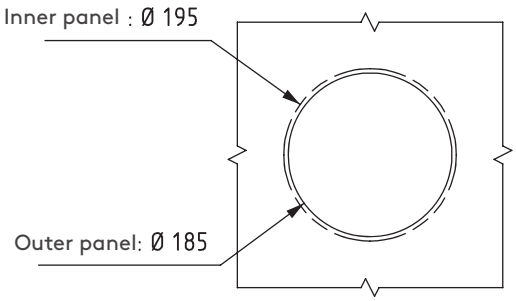

Cut out

V: 1

Gaskets

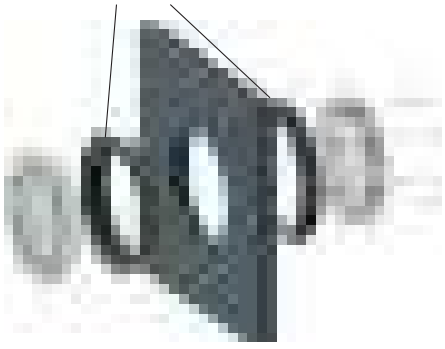

V: 2

Bellows gasket

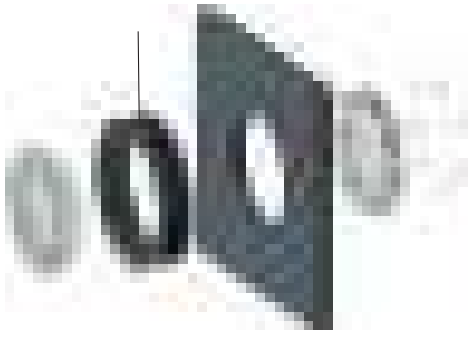

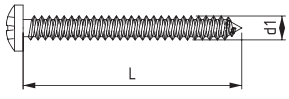

Screw

Screw

D1	L	STOCK CODE
4.2	38	306.03.138
4.2	45	306.03.304
4.2	50	306.03.305
4.2	60	306.03.306

Group Code	Door Thickness	Version
2220	DT	V

COUNTER SCREEN 2216

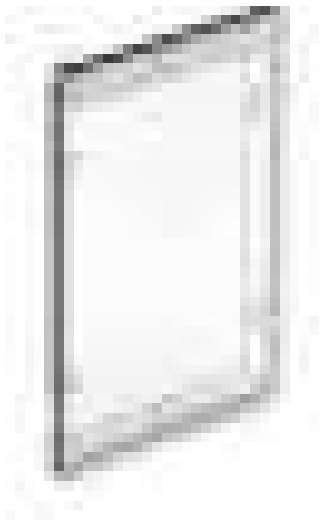

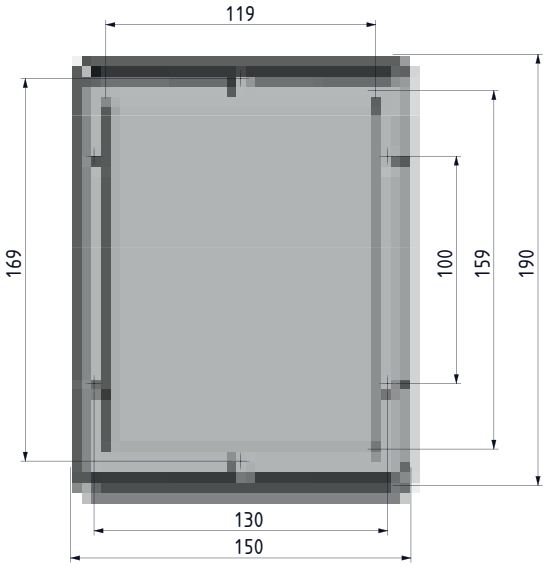

- Allows counters or dials to be viewed from outside enclosure.

COUNTER SCREEN 2215

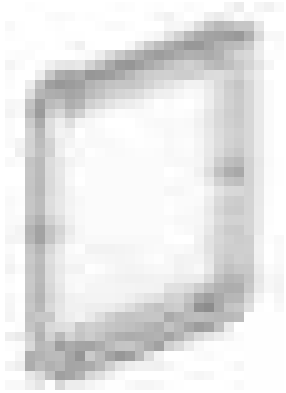

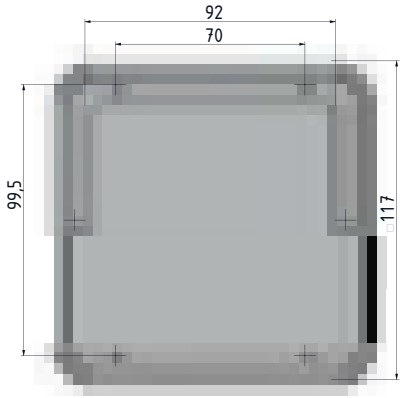

- Allows counters or dials to be viewed from outside enclosure.

tel | +90 212 721 44 44 fax | +90 212 721 44 45

EYEBOLT

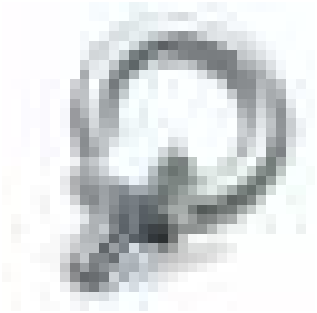

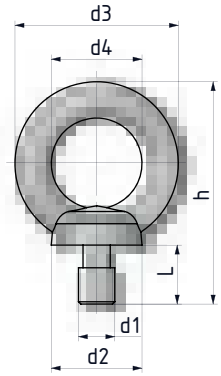

d1	Safety Load (90°)	d2 mm	d3 mm	d4 mm	h mm	L mm	Unit weigth	PRODUCT CODE
M8	140	20	36	20	49.0	13.0	0.06	2451
M10	230	25	45	25	63.0	17.0	0.10	2452
M12	340	30	54	30	73.5	20.5	0.18	2453
M14	490	35	63	35	87.0	27.0	0.28	2454
M16	700	35	63	35	89.0	27.0	0.28	2455

- Enable enclosure or machine to be moved easily.

EYEBOLT



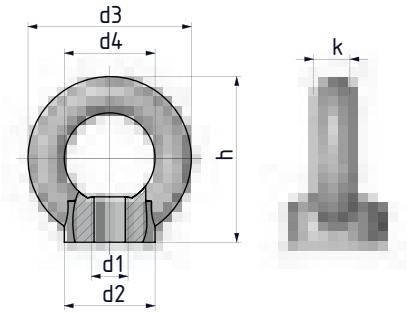

d1	Safety Load (90°)	d2 mm	d3 mm	d4 mm	h mm	k mm	Unit weigth	PRODUCT CODE
M8	140	20	36	20	36	8	0.06	2461
M10	230	25	45	25	45	10	0.09	2462
M12	340	30	54	30	53	12	0.16	2463

- Enable enclosure or machine to be moved easily.

CAGE NUT



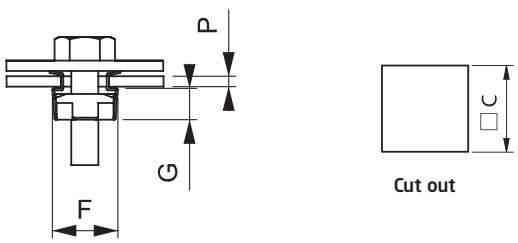

Screw	Nut	P	G	F	C	PRODUCT CODE
M5	11x11x4.5	1.7 ~ 2.5	36	20	49.0	2400
M6	11x11x4.5	25	45	25	63.0	2401
M8	14x14x5.5	3.3 ~ 4.1	54	30	73.5	2402

- Designed for attaching two steel plates

TOGGLE LATCH 340.00.135



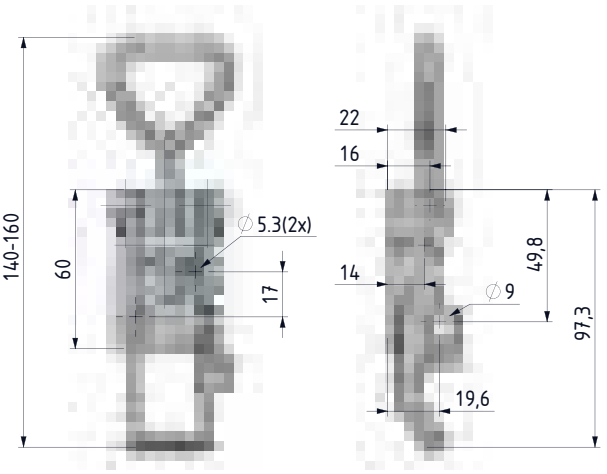

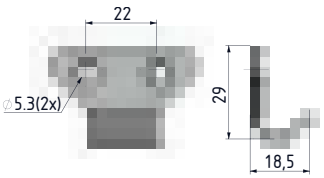

Catch plate

- Adjustable type draw latch.
- Padlockable version
- Used with a special catch plate

MATERIAL AND FINISH
Steel -Zinc Plated

TOGGLE LATCH 340.00.133



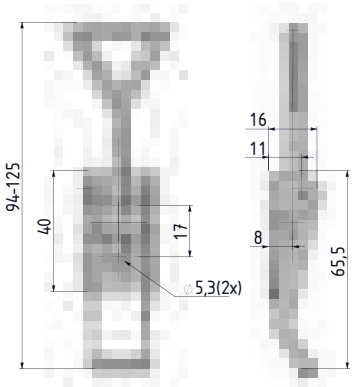

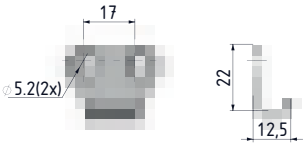

Catch plate

- Used for tool boxes, cabinets

MATERIAL AND FINISH
Steel -Zinc Plated

TOGGLE LATCH 340.00.131

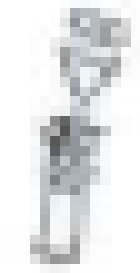

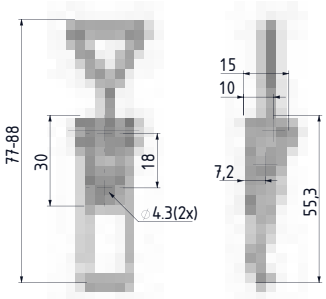

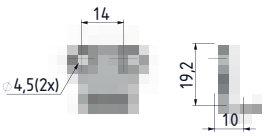

Catch plate

- Used for tool boxes, cabinets

MATERIAL AND FINISH
Steel -Zinc Plated

• **Stainless steel version: page 514**

tel | +90 212 721 44 44 fax | +90 212 721 44 45

2702 TOGGLE LATCH

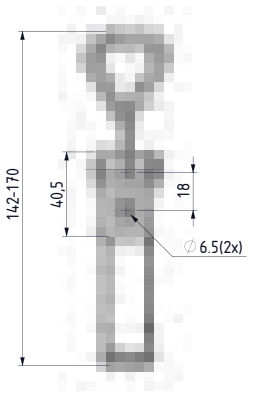

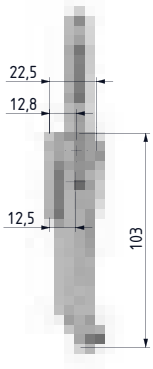

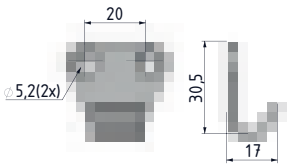

Catch plate

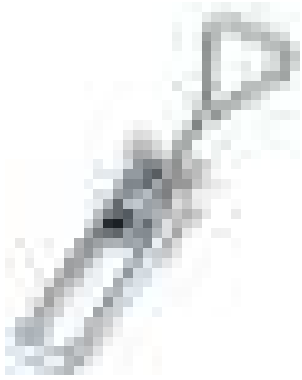

MATERIAL AND FINISH
Steel -Zinc Plated

2701 TOGGLE LATCH

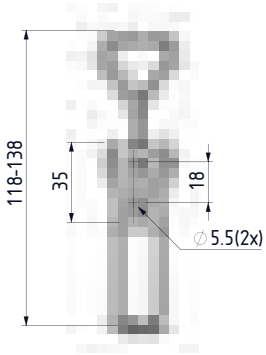

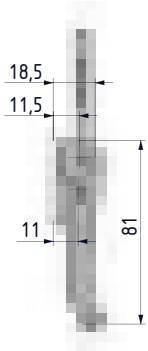

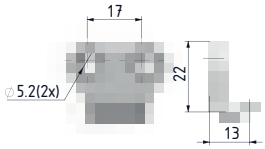

Catch plate

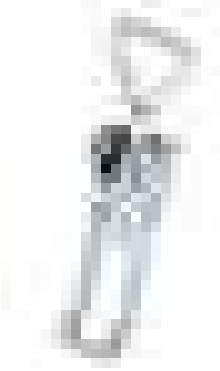

MATERIAL AND FINISH
Steel -Zinc Plated

2700 TOGGLE LATCH

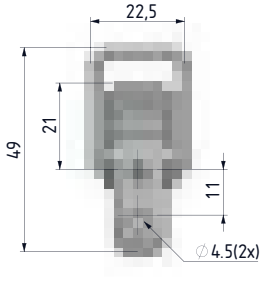

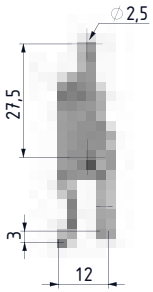

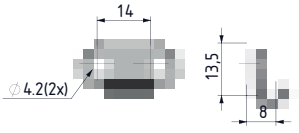

Catch plate

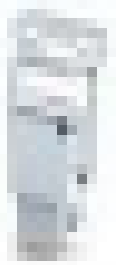

MATERIAL AND FINISH
Steel -Zinc Plated

Group Code	Material	Finish
	6	3

MINI INDEXING PLUNGERS



- Suitable for assembly on thin sheets.

MATERIAL
KNOB : Polyamide DIN EN ISO 1043-1 PA6 GFR 30
BODY : Steel
NUT : Steel
PIN : Stainless Steel
Finish : Zinc Plated

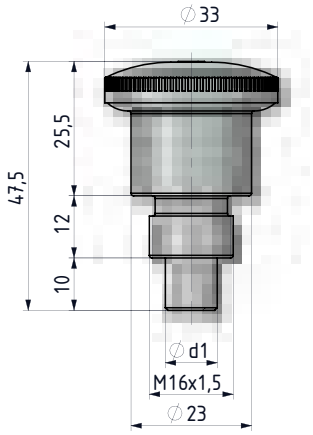

Product code	ød1	Stroke
2760	10	10
2761	8	8
2762	6	6

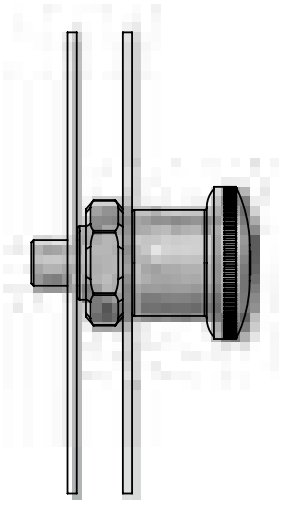

Locked position

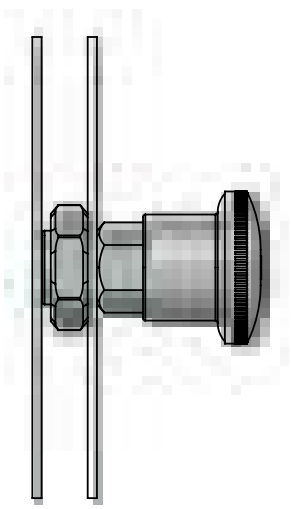

Open position

tel | +90 212 721 44 44 fax | +90 212 721 44 45

2750 SPRING LOADED LATCH WITHOUT STUD

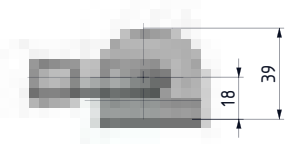

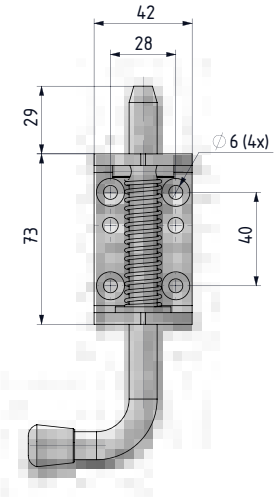

Locked position

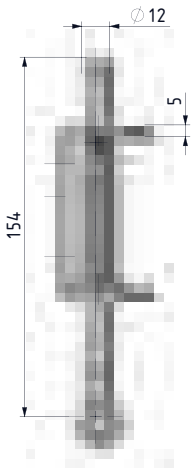

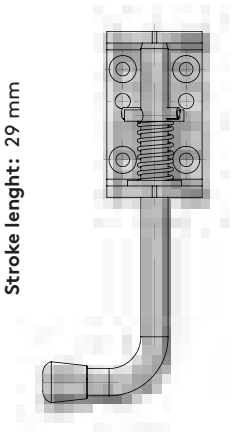

Open position
Should hold with hand

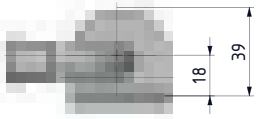

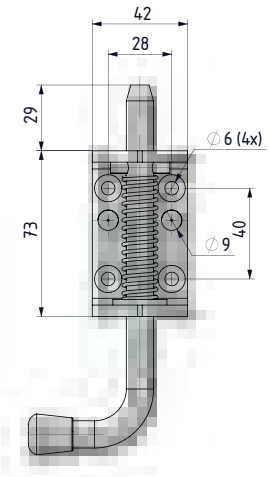

Locked position

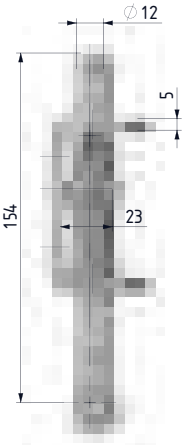

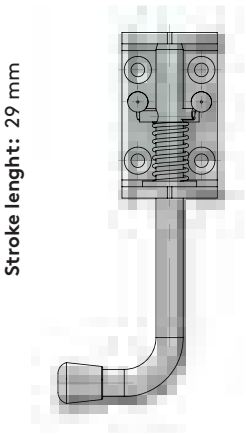

Open position

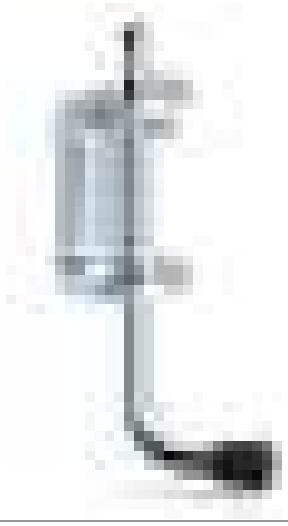

- Versatile galvanized steel latch great for wood or metal application.

MATERIAL

Body	: Steel
Pin	: Steel
Finish	: Zinc Plated

2751 SPRING LOADED LATCH WITH STUD

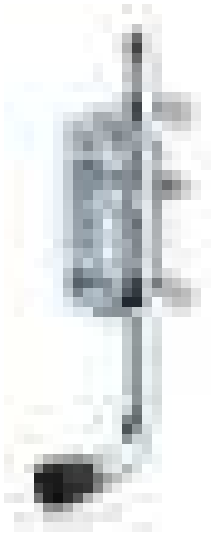

- Pin system allows for the latch to be locked in the open position.
- Non-directional.

MATERIAL

Body	: Steel
Pin	: Steel
Finish	: Zinc Plated

Group Code	Material	Finish
	6	3

SCREW

340.02.430



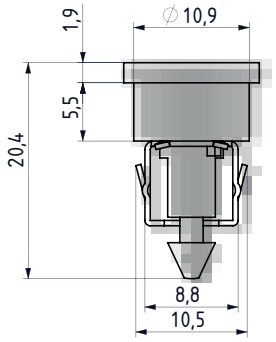

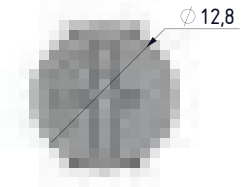

- Provides easy fixing with quarter turn

MATERIAL
SCREW: Zamak DIN-EN 1774-ZnAl4Cu1l
CATCH PLATE : Steel

FINISH
Zinc plated





tel | +90 212 721 44 44 fax | +90 212 721 44 45

CABLE SHUNTING RING

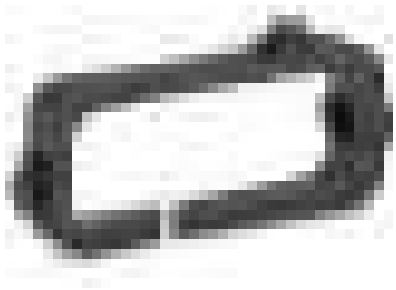

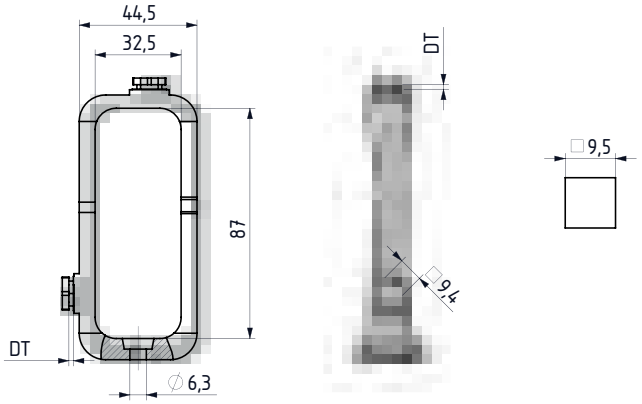



- Quick fixing in a square hole by turning 45 degress
- Mointing by M6 Screw as an option
- Install horizontally or vertically

MATERIAL
PA 6 Black

DT (DOOR THICKNESS)	PRODUCT CODE
1.3 - 1.5 mm thickness panel	**320.02.164**
1.6 - 2.0 mm thickness panel	**320.02.165**

025 GLASS HINGE

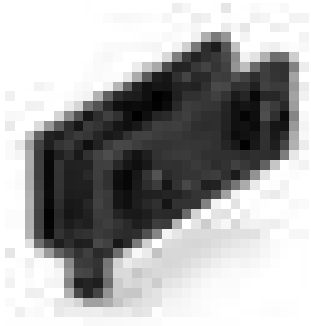

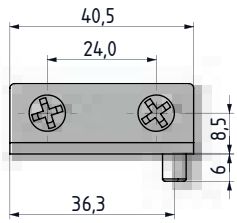

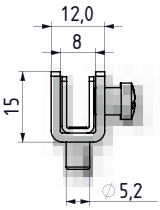

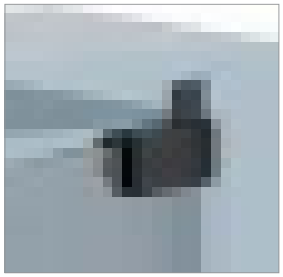

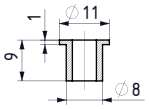

Busing

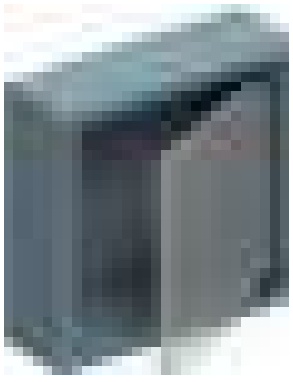

- Suitable for glass thickness max. 6 mm
- The glass is safe from damage between the plastic plates and the steel m6x6 screw

ASSEMBLY APPLICATION	
Bottom	001
Top	002

MATERIAL
Body : Steel
Screew : Steel
Busing : Delrin

Group Code	Material	Finish	Assembly application
025	6	F	

FINISH	F
Nickel	4
Black coated	2

COVER STAY 079

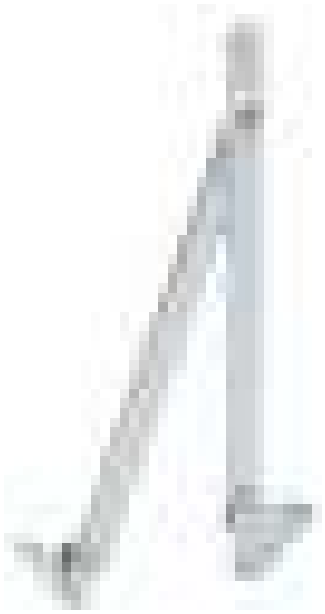

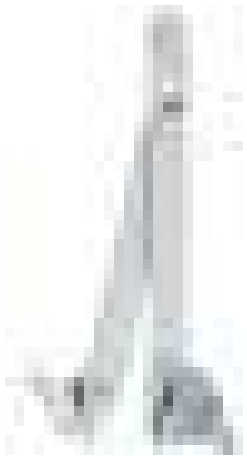

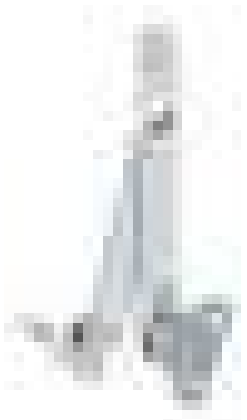

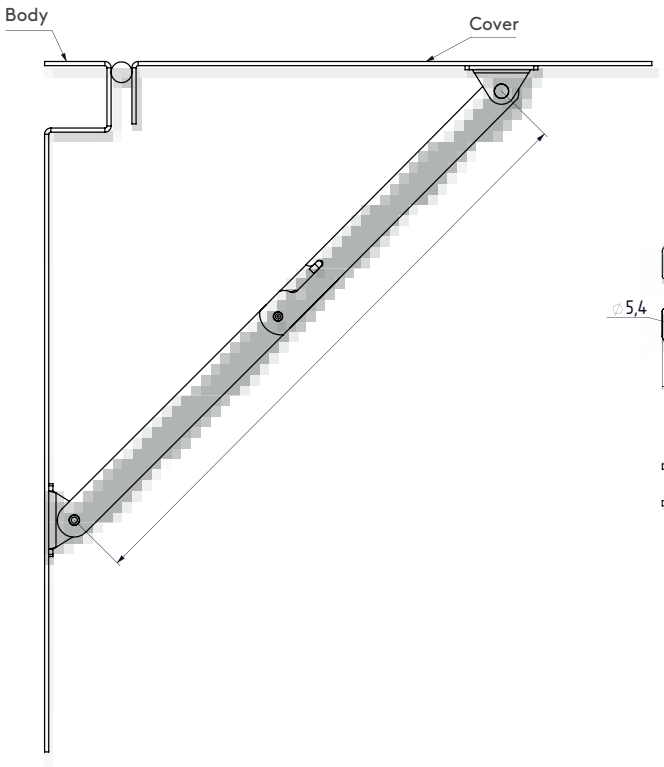

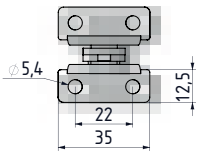

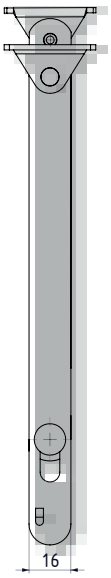

LEFT RIGHT

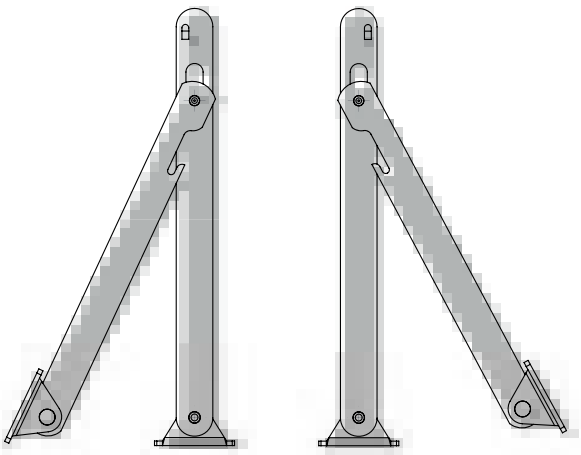

Lmm
292
202
135

MATERIAL
Steel
FINISH
Zinc plated

• **Stainless steel version: page 516**

Group Code	Material	Finish	Length	Door Direction
079	6	3	L	

DOOR DIRECTION	
Right hand	001
Left hand	002

tel | +90 212 721 44 44 fax | +90 212 721 44 45

279 COVER STAY

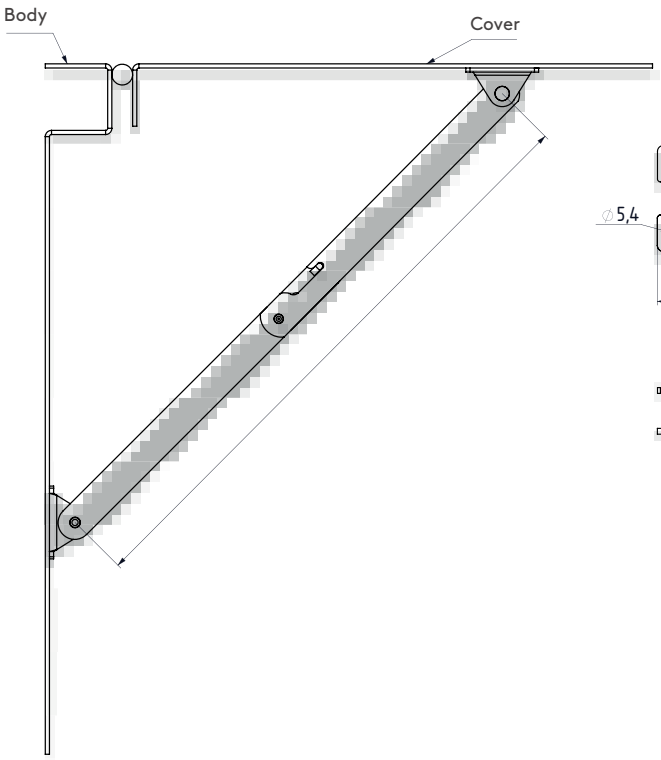

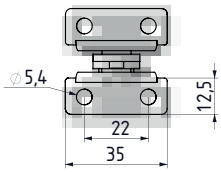

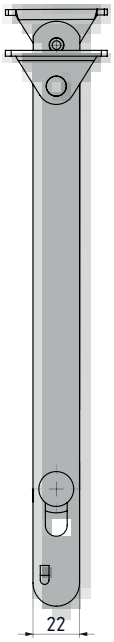

LEFT RIGHT

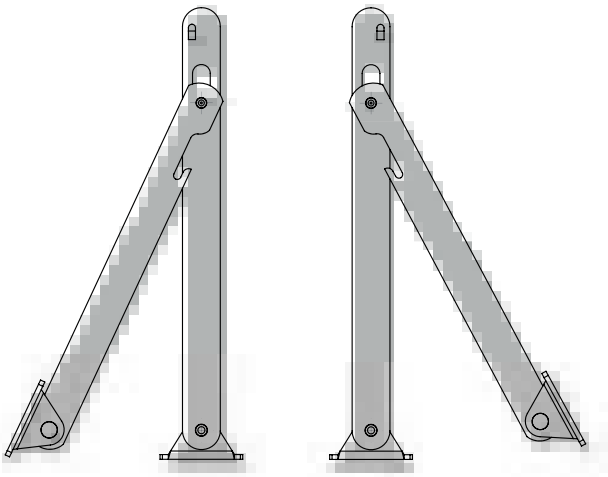

Lmm
292
202
135

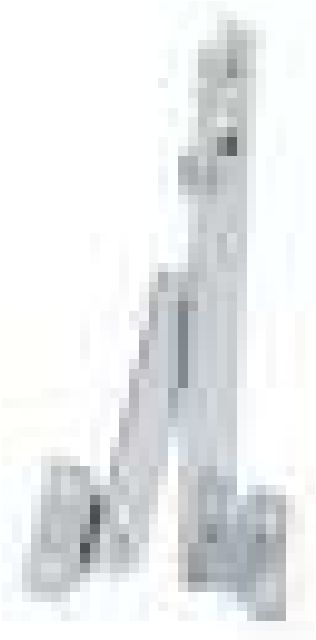

- **Stainless steel version: page 515**
- Suitable for heavy-duty applications
- Manufactured using 4 mm thick steel

MATERIAL
Steel

FINISH
Zinc plated

Group Code	Material	Finish	Length	Door Direction
279	6	3	L	

DOOR DIRECTION	
Right hand	001
Left hand	002

COVER STAY 179

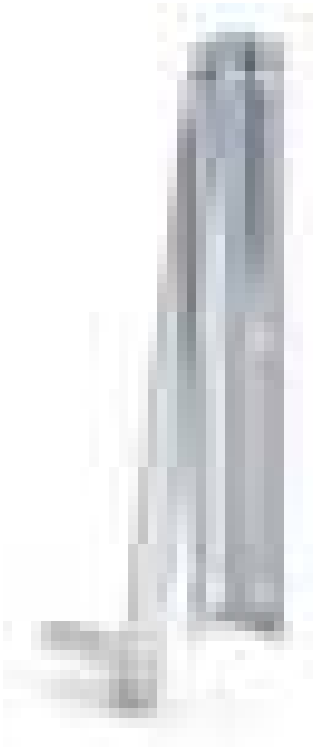

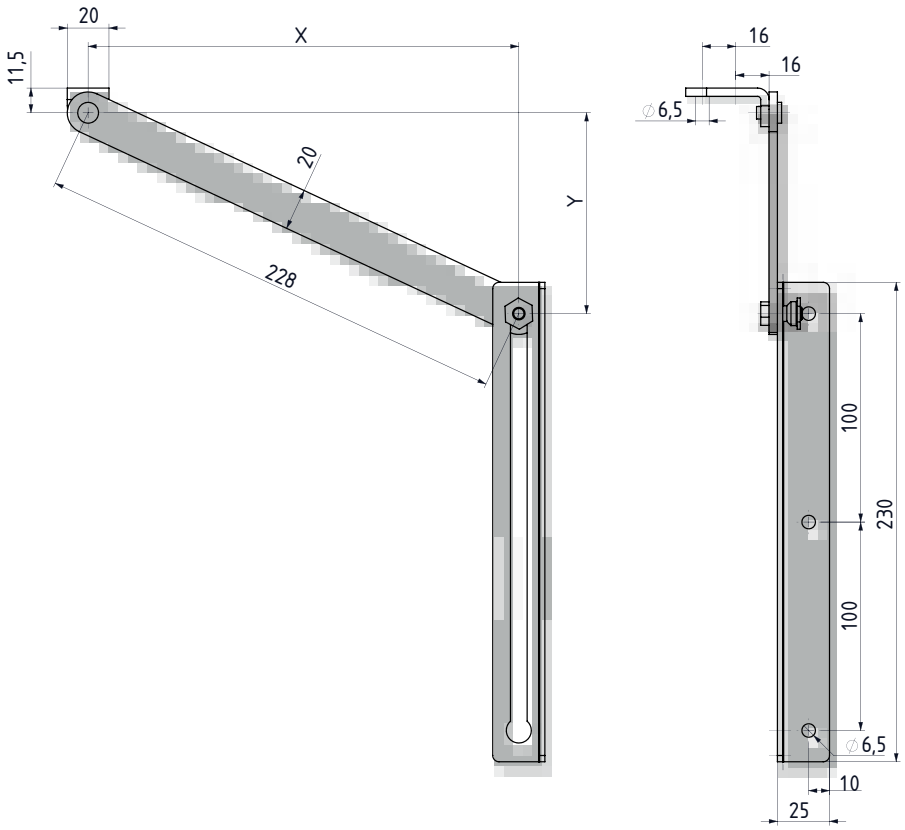

- **Stainless steel version: page 517**
- Cover Stay with automatic lock to keep the door open
- LH and RH application is possible

MATERIAL
Steel
FINISH
Zinc plated

Installation dimensions

OPENING ANGLE	DIMENSIONS X	Y	MINIMAL DOOR WIDTH
90°	140	180	405
105°	120	166	390
120°	110	150	375
135°	100	146	370

For other configurations:
y= X+ min.40

Group Code	Material	Finish
179	6	3

tel | +90 212 721 44 44 fax | +90 212 721 44 45

ACOUSTIC SPONGE (FLAT TYPE)

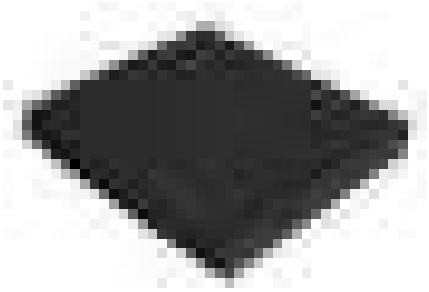

- With or without Adhesive band at back side is available
- Can be supplied as plate or Roll type.
- Provides sound and heat isolation
- Flame retardant properties
- Can be used between -30 , +130 °C
- Please contact Essentra for different sizes

MATERIAL
Polyurethane

COLOR
Black

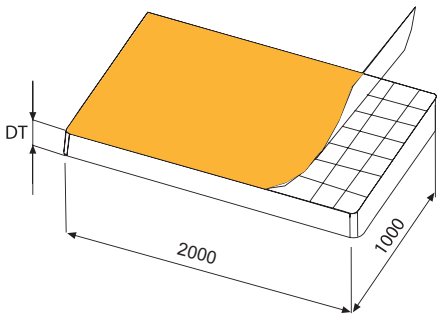

Self - adhesive

DT MM	PRODUCT CODE
30	340.10.046
40	340.10.047
50	340.10.048

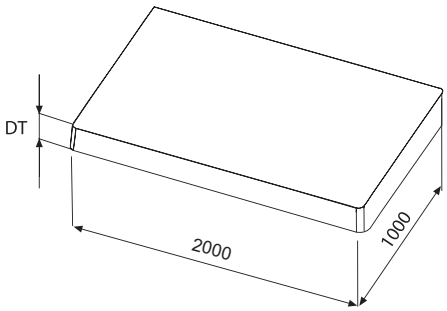

Non - adhesive

DT MM	PRODUCT CODE
30	340.10.066
40	340.10.067
50	340.10.068

ACOUSTIC SPONGE (FORMED TYPE)

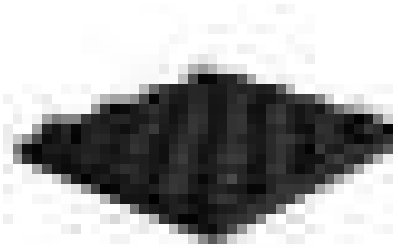

- With or without Adhesive band at back side is available
- Can be supplied as plate or Roll type.
- Provides sound and heat isolation
- Flame retardant properties
- Can be used† between -30 , +130 °C
- Please contact Essentra for different sizes

MATERIAL
Polyurethane

COLOR
Black

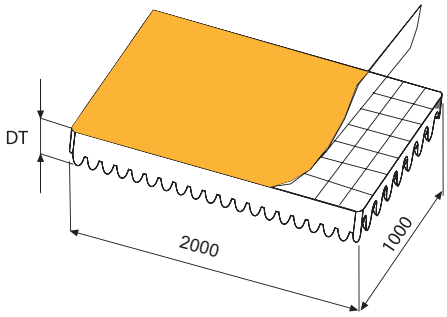

Self - adhesive

DT MM	PRODUCT CODE
30	340.10.006
40	340.10.007
50	340.10.008

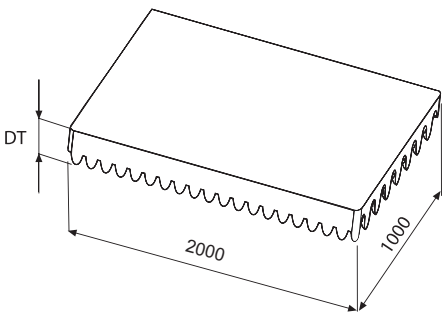

Non - adhesive

DT MM	PRODUCT CODE
30	340.10.026
40	340.10.027
50	340.10.028

DIAPHGRAM GROMMETS

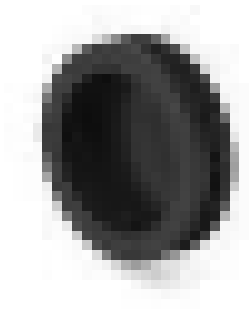

- For use as a blanking grommet prior to installation of cables
- The membrane is drilled while using as a wire protector
- Produced from NBR rubber
- Suitable for different wire diameters

APPLICATIONS
Electric panels

MATERIAL
NR Rubber, or TP
COLOR
Black

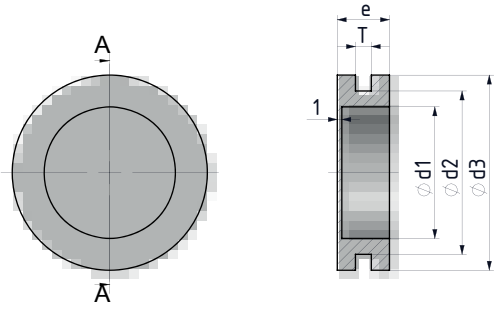

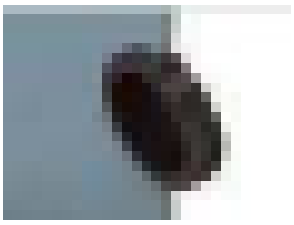

Ø D1 MM	Ø D2 MM	Ø D3 MM	T MM	E MM	PRODUCT CODE
29	36	43	3.5	11.5	340.00.370
39	48.5	52	3.2	12	340.00.371
48.5	57	63.5	3.5	14	340.00.372

DIAPHGRAM GROMMETS

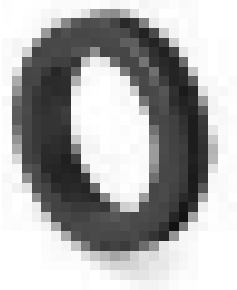

- Used for protecting wires and cables passing through the panel holes.
- Design provides easy fixing of grommet

MATERIAL
NR Rubber, or TP
COLOR
Black

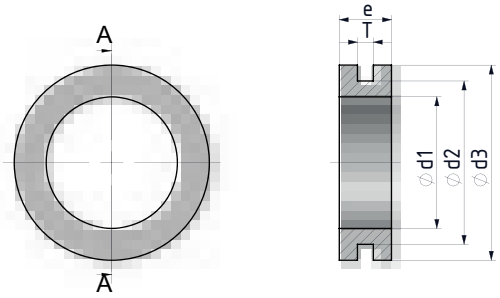

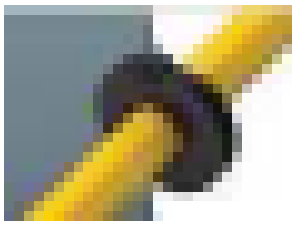

Ø D1 MM	Ø D2 MM	Ø D3 MM	T MM	E MM	PRODUCT CODE
13.5	19.5	27	3.2	8	340.00.380
20	25	30	3.5	11.5	340.00.381
23.5	29	34	3.5	11.5	340.00.382
38.5	48.5	52	3.2	11.5	340.00.383

tel | +90 212 721 44 44 fax | +90 212 721 44 45

RUBBER STOPPER

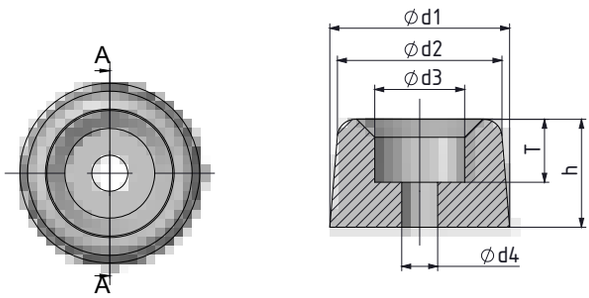

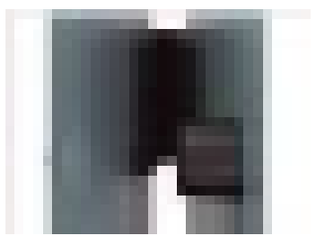

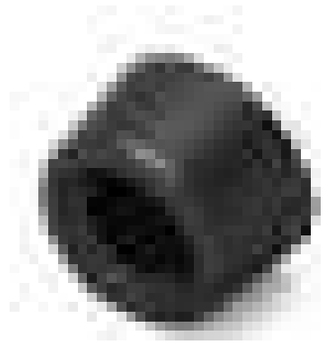

- Prevents damage to doors
- Design provides easy fixing of grommet.

MATERIAL
NR Rubber, or TP
COLOR
Black

Ø D1 MM	Ø D2 MM	Ø D3 MM	ØD4 MM	T MM	E MM	PRODUCT CODE
20	18	10	4	7	12	**340.08.010**
19	19	10	4	8	22.5	**340.08.011**
25	25	14	4.3	20	30	**340.08.012**
39.5	38	13	6	12	32	**340.08.013**

RUBBER PLUG

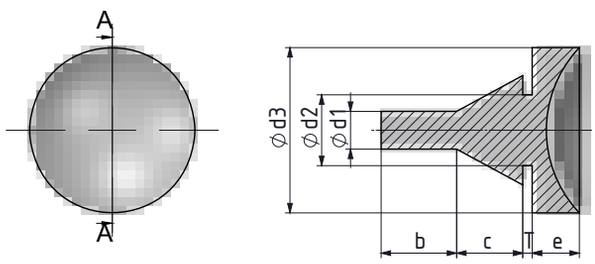



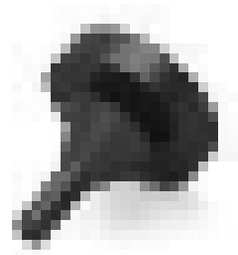

- For use as a blanking grommet prior to installation of cables
- Suitable for different sheet thickness and diameters
- Design provides easy fixing

MATERIAL
NR Rubber, or TP
COLOR
Black

Ø D1 MM	Ø D2 MM	Ø D3 MM	T MM	B MM	C MM	E MM	PRODUCT CODE
2.5	4	14	2.5	13.5	3.5	8	340.00.400
4	7	17.5	1.5	8.5	6	5	340.00.401
4	7	18	2	8.5	6	6	340.00.402

DOOR HOLDBACK

340.08.001



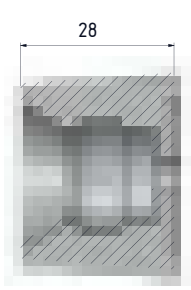

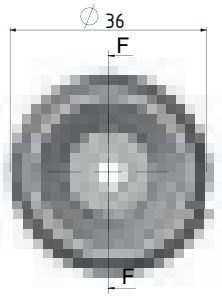

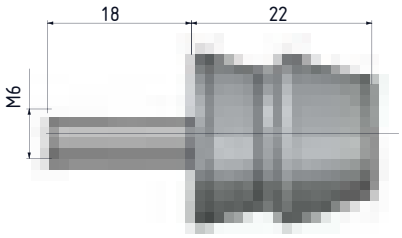

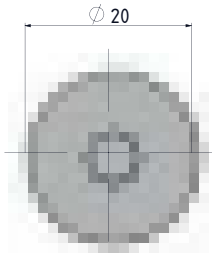

- Provides good shock absorbing properties while the door contacts with frame of the cabinet
- Keeps the door at open position and can be used instead of cover stays
- Suitable for outdoor cabinets with high corrosion resistance

MATERIAL
NBR Rubber

COLOR
Black

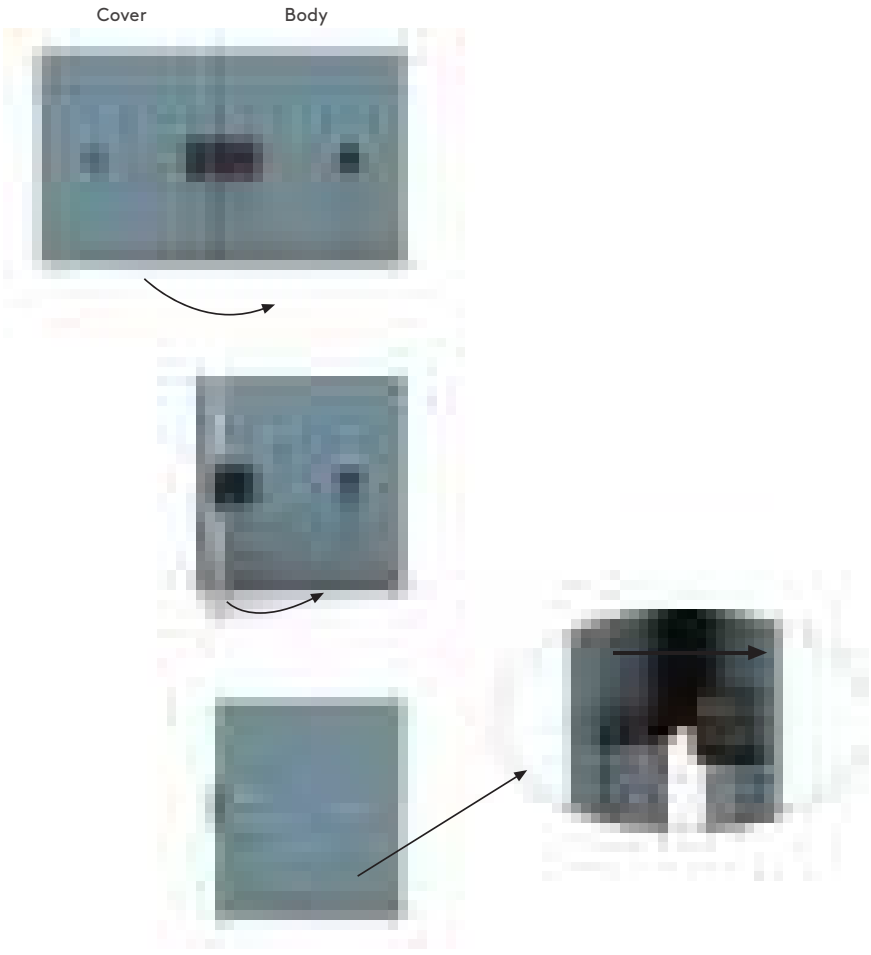

tel | +90 212 721 44 44 fax | +90 212 721 44 45

DOOR BOTTOM BRUSHES (Screw type)

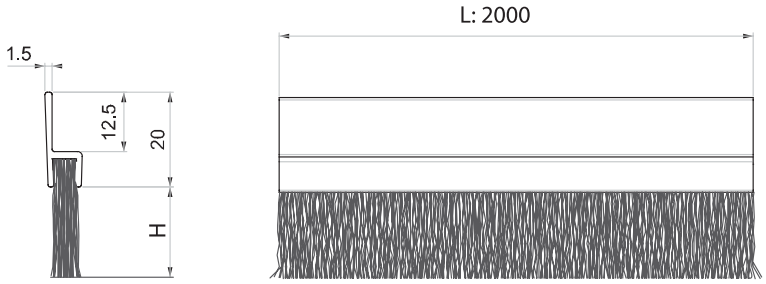

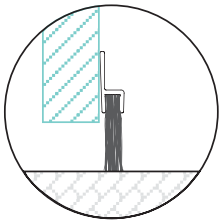

H MM	PRODUCT CODE
40	340.20.005.2000
50	340.20.006.2000
60	340.20.007.2000
70	340.20.008.2000
80	340.20.009.2000
90	340.20.010.2000
100	340.20.011.2000

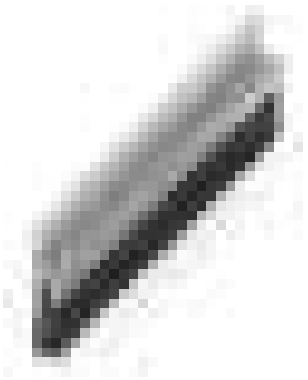

- Can be fixed with screw
- Fixing plate is made of Aluminium
- Do not allow dust to go through the cabinets
- Please contact Essentra for different sizes

MATERIAL
BODY : Aluminium

DOOR BOTTOM BRUSHES (plug-in type)

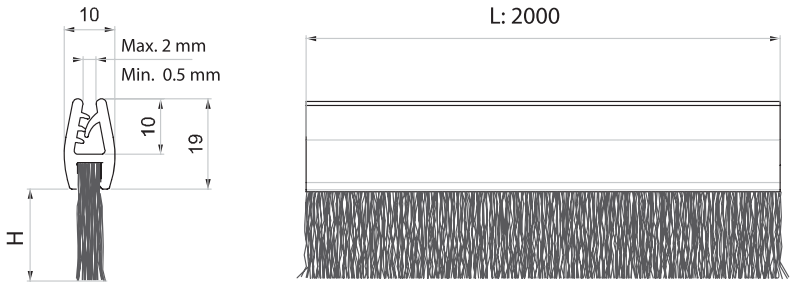

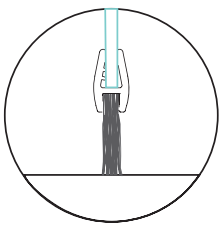

H MM	PRODUCT CODE
40	340.20.025.2000
50	340.20.026.2000
60	340.20.027.2000
70	340.20.028.2000
80	340.20.029.2000
90	340.20.030.2000
100	340.20.031.2000



- Can be fixed by plugging in to the door
- Do not allow dust to go through the cabinets
- Please contact Essentra for different sizes

MATERIAL
BODY : Plastic

FAST FIND INDEX

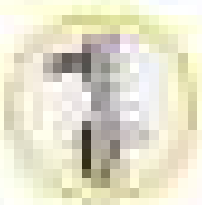
444

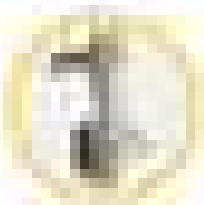
445

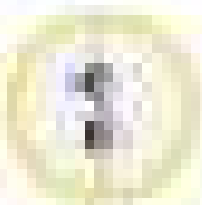
446-447

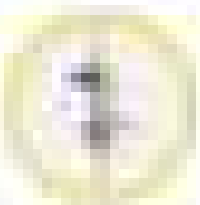
448-449

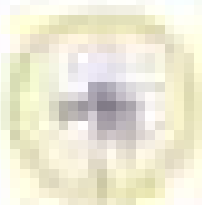
450-451

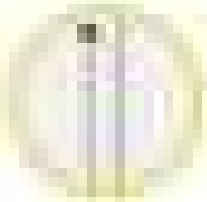
452


453

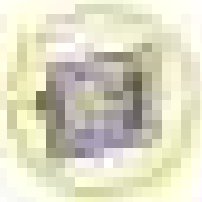
454

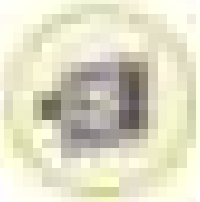
455

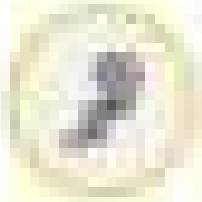
456

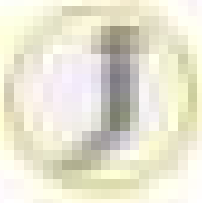
457

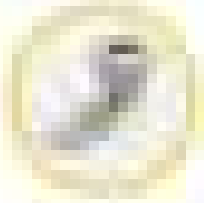
458

NEW


458

NEW


459

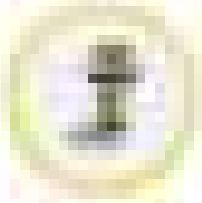
460

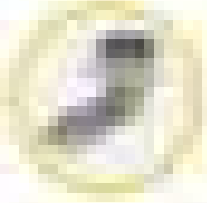
461

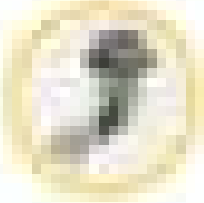
462

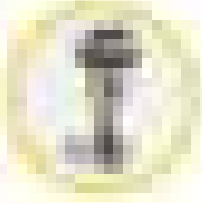
463

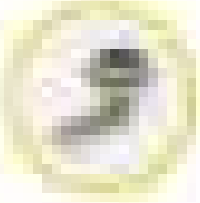
464

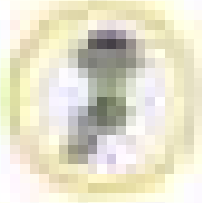
465


466


467


468

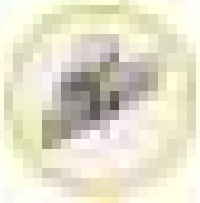
469

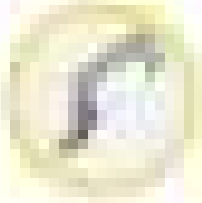
470

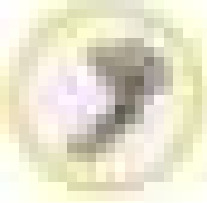
471

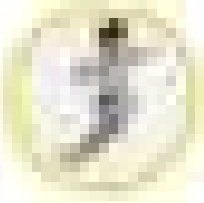
472

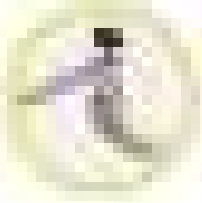
473

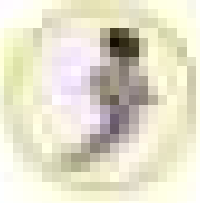
474

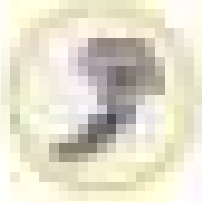
475

NEW


476

NEW


477

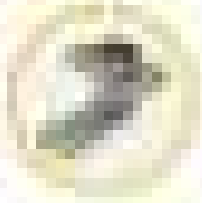
478

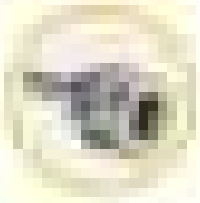
479

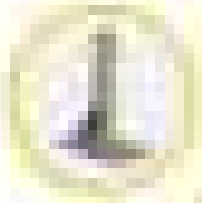
479



STAINLESS STEEL PRODUCTS-
LOCKS-LATCHES

442-479

mesan
ESSENTRA COMPONENTS

e-mail | info@mesanlocks.com web | www.mesanlocks.com

SWINGHANDLE 401

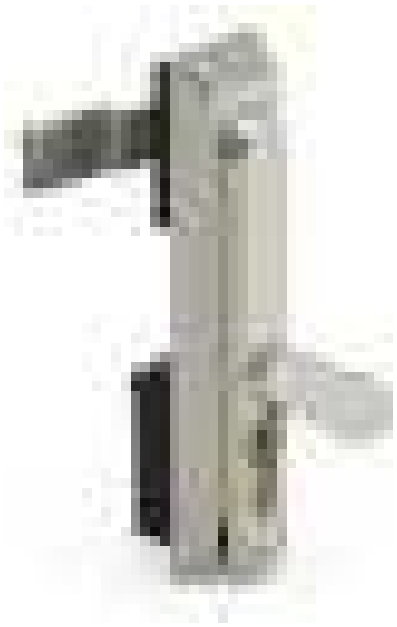

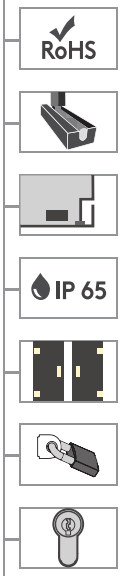

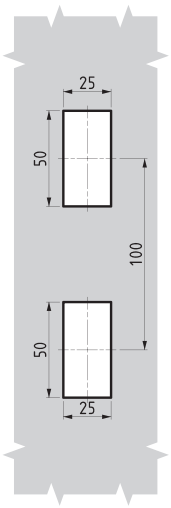

Cut out

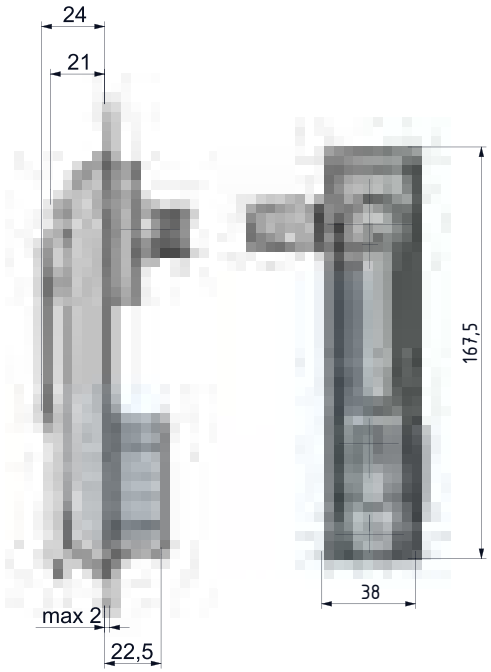

APPLICATIONS
Electric panels, outdoor cabinets

MATERIAL

BODY:	Stainless Steel (AISI 316)
HANDLE:	Stainless Steel (AISI 316)
CAM:	Stainless Steel
GASKET:	Polyurethane



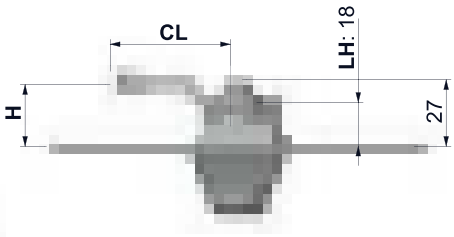

	BRASS CYLINDER	DD
	No cylinder	00
	Keyed alike	11

Group Code	Cylinder	Cam	Padlock*
401	DD	CC	

*: add "1" for padlock application

For cams please check page: 174
For rods please check page: 178 or 460

tel | +90 212 721 44 44 fax | +90 212 721 44 45

501 SWINGHANDLE

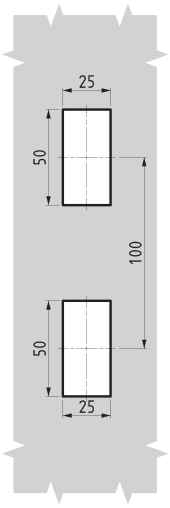

Cut out

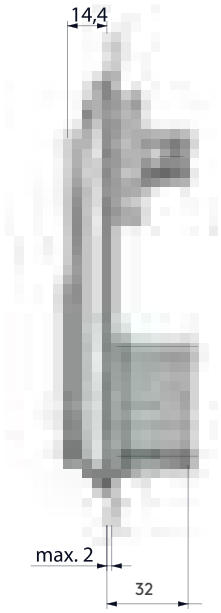

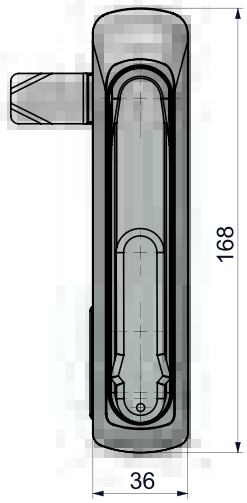

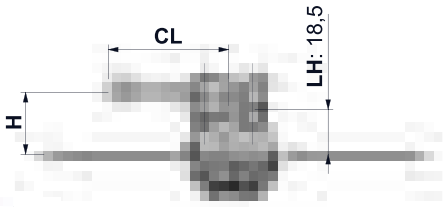

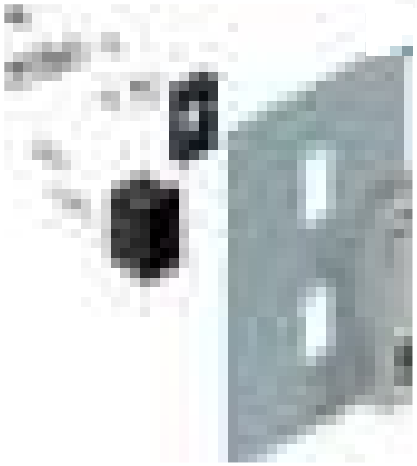

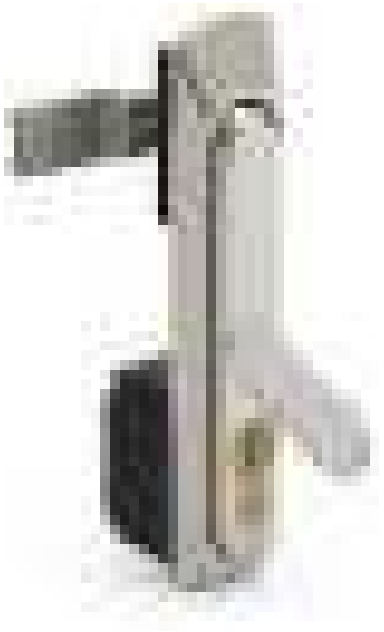

APPLICATIONS
Electric panels, outdoor cabinets

MATERIAL

BODY:	Stainless Steel (AISI 316)
HANDLE:	Stainless Steel (AISI 316)
CAM:	Stainless Steel
GASKET:	Polyurethane

	BRASS CYLINDER	DD
	No cylinder	00
	Keyed alike	11

Group Code	Handle		Body		Cylinder	Cam
501	4	0	4	0	DD	CC

For cams please check page: 174
For rods please check page: 178 or 460

SWINGHANDLE GEAR BOX 502

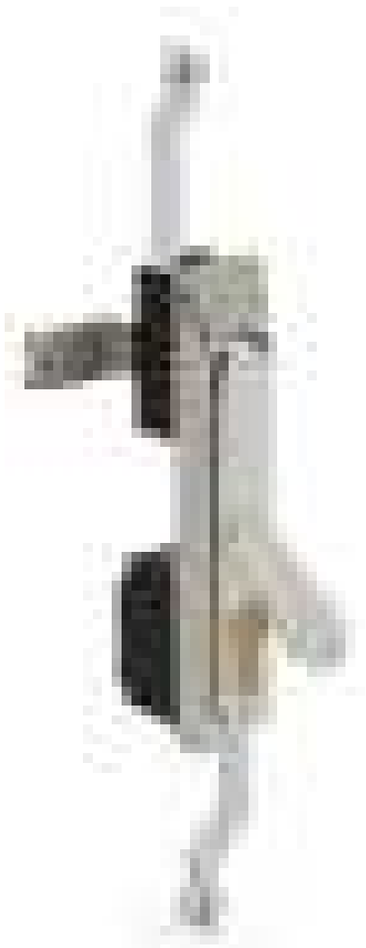

RoHS

IP 65

L R

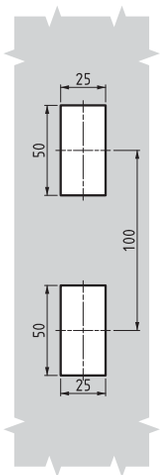

Cut out

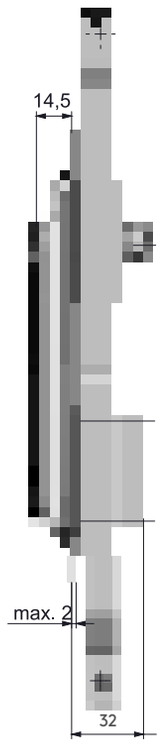

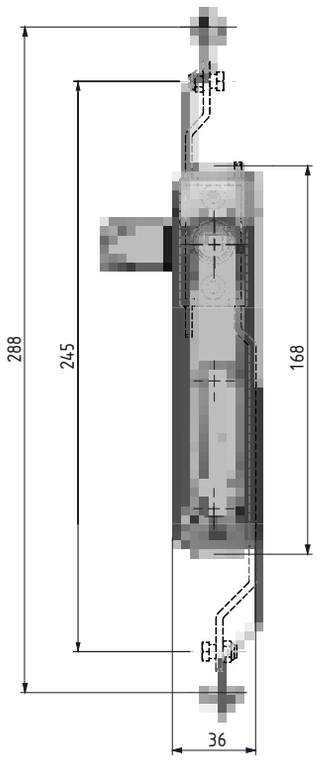



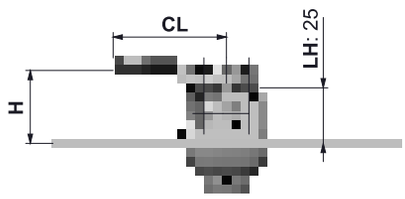

- Thin external profile (14.4 mm) for flush appearance
- High-security, brass, Euro Profile single cylinder available

APPLICATIONS
Electric panels, outdoor cabinets

MATERIAL

BODY:	Stainless Steel (AISI 316)
HANDLE:	Stainless Steel (AISI 316)
MECHANISM:	PA6 GFR 30
CAM:	Stainless Steel
GASKET:	Polyurethane

	BRASS CYLINDER	DD
	No cylinder	00
	Keyed alike	11

Group Code	Handle		Body		Cylinder	Cam
502	4	0	4	0	DD	CC

For cams please check page: 174

For rods please check page: 178 or 460

tel | +90 212 721 44 44 fax | +90 212 721 44 45

502 SWINGHANDLE GEAR BOX

STAINLESS STEEL

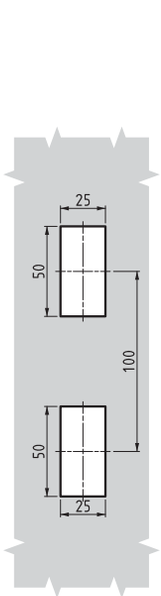

Cut out

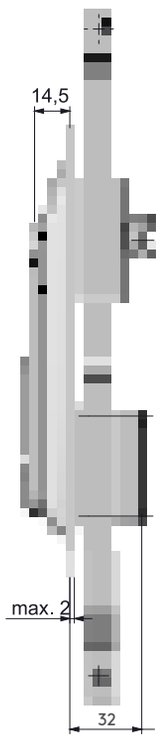

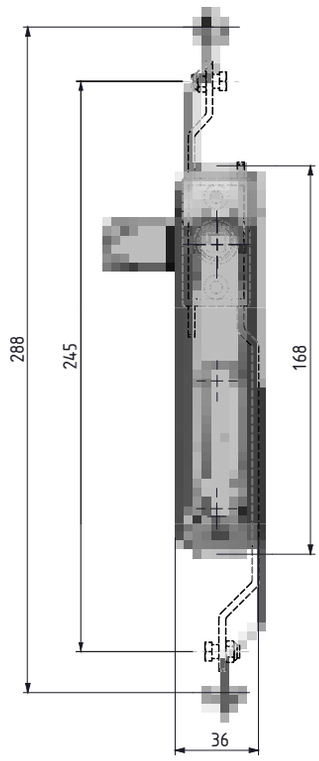



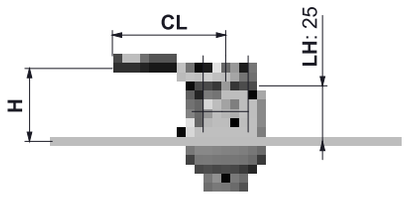



- Thin external profile (14.4 mm) for flush appearance
- High-security, brass, Euro Profile single cylinder available

APPLICATIONS
Electric panels, outdoor cabinets

MATERIAL

BODY:	Stainless Steel (AISI 316)
HANDLE:	Stainless Steel (AISI 316)
MECHANISM:	Stainless Steel
CAM:	Stainless Steel
GASKET:	Polyurethane

	BRASS CYLINDER	DD
	No cylinder	00
	Keyed alike	11

Group Code	Version	Handle		Body		Cylinder	Cam
502	2	4	0	4	0	DD	CC

For cams please check page: 174
For rods please check page: 178 or 460

SWINGHANDLE GEAR BOX 402



RoHS

IP 65

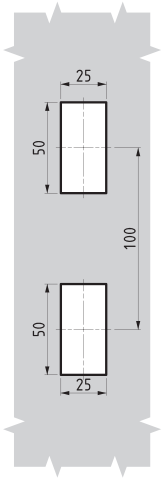

Cut out

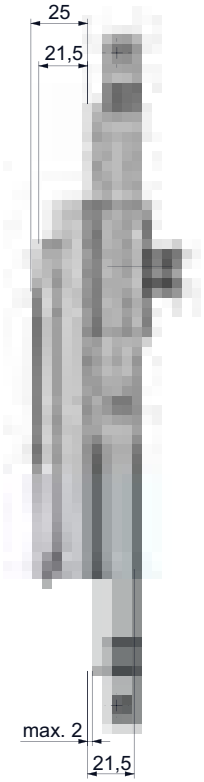

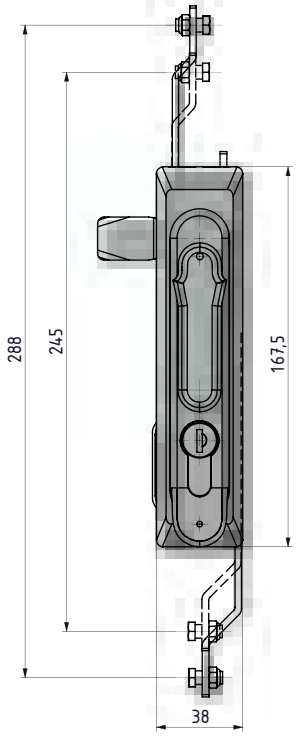

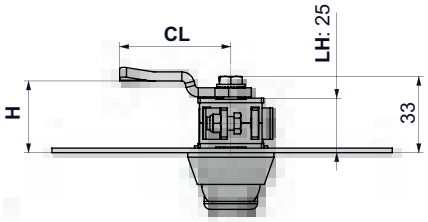

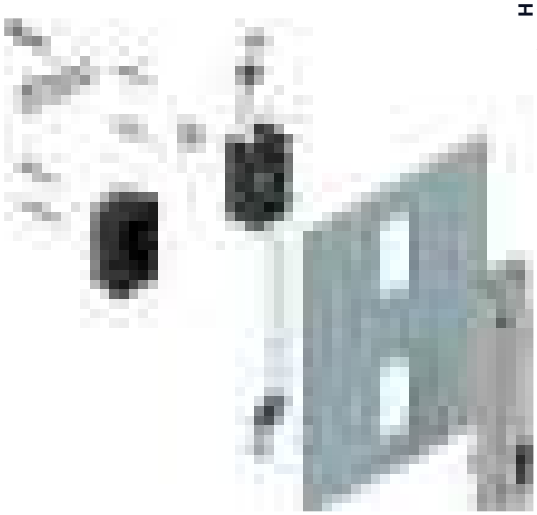

APPLICATIONS
Electric panels, outdoor cabinets

MATERIAL

BODY:	Stainless Steel (AISI 316)
HANDLE:	Stainless Steel (AISI 316)
MECHANISM:	PA6 GFR 30
CAM:	Stainless Steel
GASKET:	Polyurethane

	BRASS CYLINDER	DD
	No cylinder	00
	Keyed alike	11

Group Code	Cylinder	Cam	Padlock*
402	DD	CC	

*: add "1" for padlock application

For cams please check page: 174
For rods please check page: 178 or 452

tel | +90 212 721 44 44 fax | +90 212 721 44 45

402 SWINGHANDLE GEAR BOX

STAINLESS STEEL



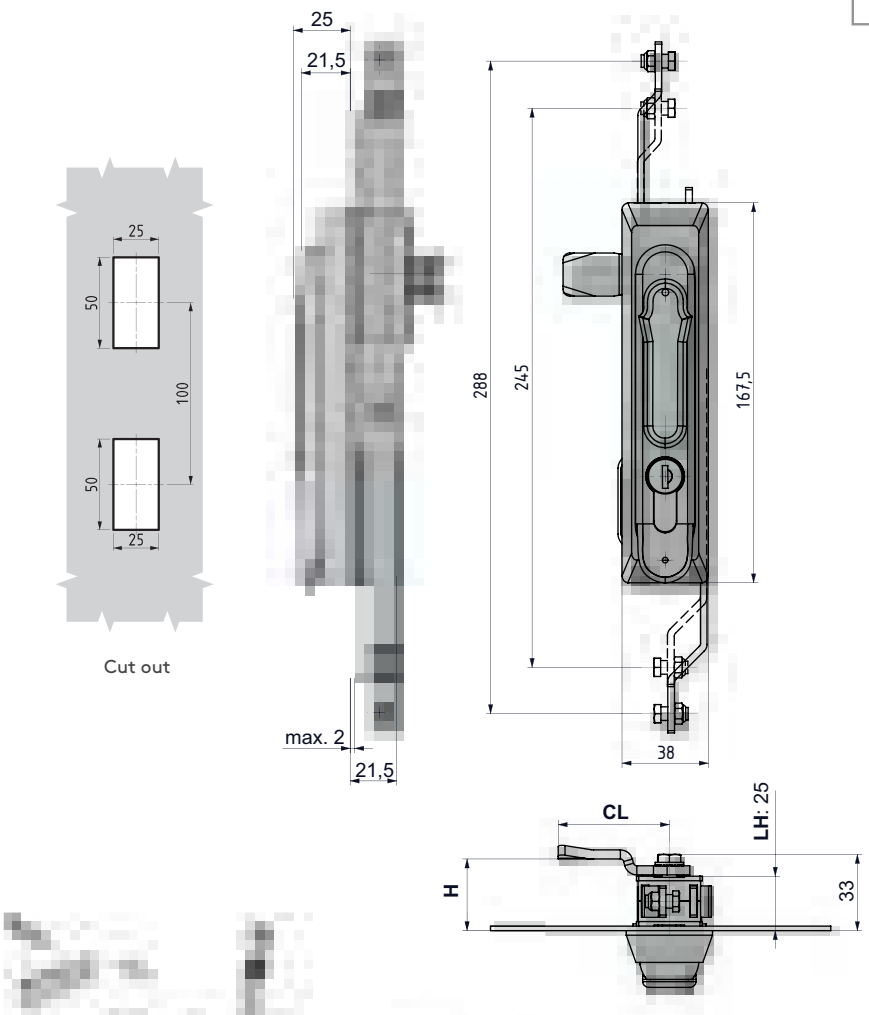

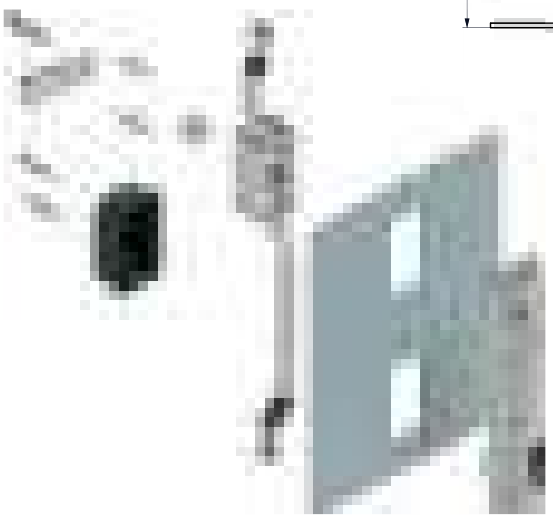

APPLICATIONS
Electric panels, outdoor cabinets

MATERIAL

BODY:	Stainless Steel (AISI 316)
HANDLE:	Stainless Steel (AISI 316)
MECHANISM:	Stainless Steel
CAM:	Stainless Steel
GASKET:	Polyurethane

	BRASS CYLINDER	DD
	No cylinder	00
	Keyed alike	11

Group Code	Version	Cylinder	Cam	Padlock*
402	2	DD	CC	

*: add "1" for padlock application

For cams please check page: 174
For rods please check page: 178 or 460

THREE POINT LOCK – T HANDLE

103



RoHS

L

R

V: 3

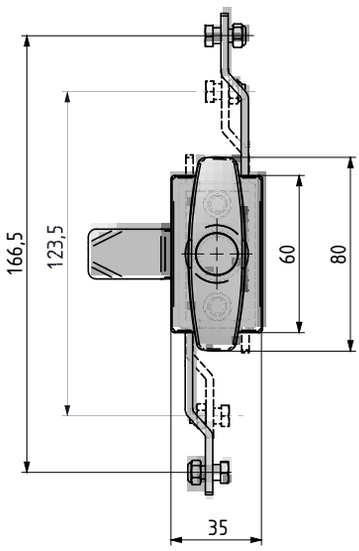

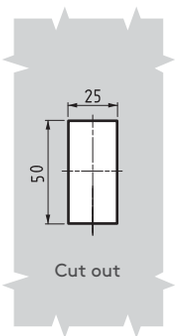

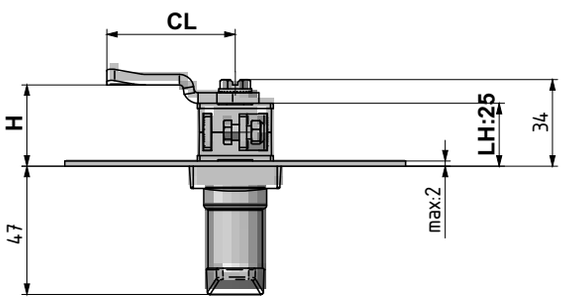

MATERIAL

BODY:	Stainless Steel
HANDLE:	Stainless Steel
MECHANISM:	Zamak DIN-EN 1774-ZnAl4Cu1
CAM:	Stainless Steel
GASKET:	Polyurethane

DOOR DIRECTION	
Right hand	001
Left hand	002

Group Code	Version	Handle		Body		Cylinder	Cam	Door Direction
103	3	4	0	4	0	00	CC	

For cams please check page: 174

For rods please check page: 178 or 452

tel | +90 212 721 44 44 fax | +90 212 721 44 45

103 THREE POINT LOCK – L HANDLE

V: 4

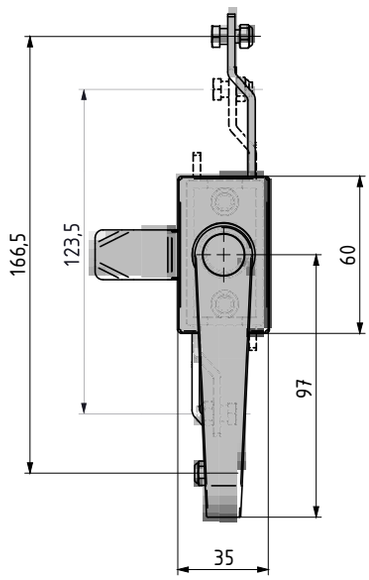

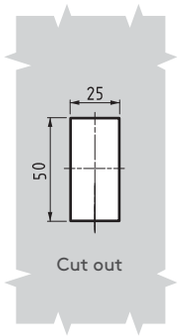

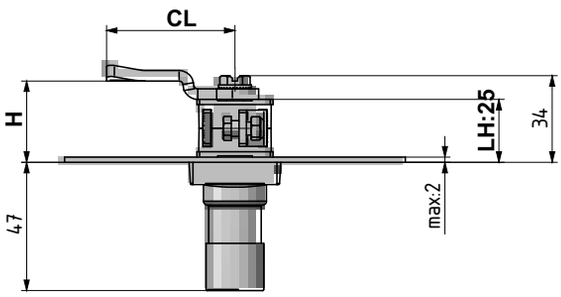

RoHS

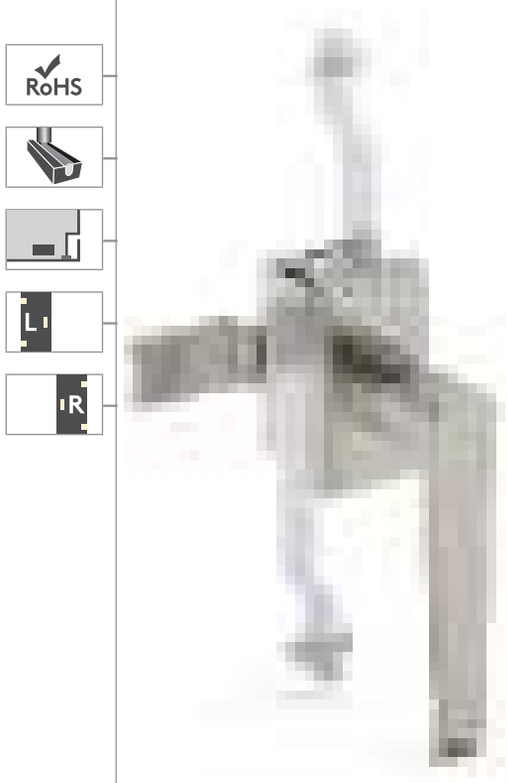

MATERIAL

BODY:	Stainless Steel
HANDLE:	Stainless Steel
MECHANISM:	Zamak DIN-EN 1774-ZnAl4Cu1
CAM:	Stainless Steel
GASKET:	Polyurethane

DOOR DIRECTION	
Right hand	001
Left hand	002

Group Code	Version	Handle		Body		Cylinder	Cam	Door Direction
103	4	4	0	4	0	00	CC	

For cams please check page: 174

For rods please check page: 178 or 452

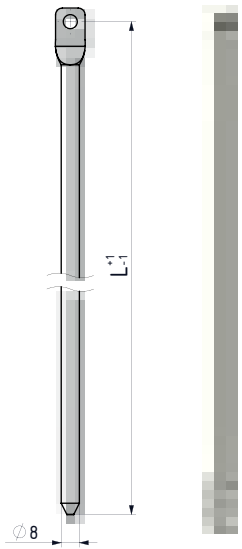

V: 1

L MM	PRODUCT CODE
400	IC 4-0-1-400
500	IC 4-0-1-500
600	IC 4-0-1-600
700	IC 4-0-1-700
800	IC 4-0-1-800
900	IC 4-0-1-900
1000	IC 4-0-1-1000

APPLICATION:
- With gear-box locks
- Locks with three-point cam

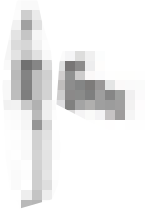

ACCESSORIES:
- Round-rod guide (CY)

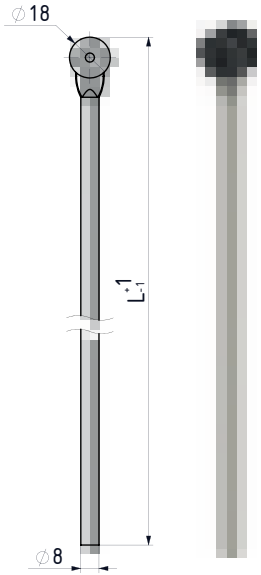

V: 2

L MM	PRODUCT CODE
400	IC 4-0-2-400
500	IC 4-0-2-500
600	IC 4-0-2-600
700	IC 4-0-2-700
800	IC 4-0-2-800
900	IC 4-0-2-900
1000	IC 4-0-2-1000

APPLICATION:
- With gear-box locks
- Locks with three-point cam

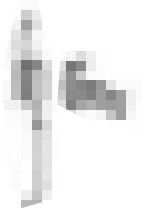

ACCESSORIES:
- Round-rod guide (CY)
- Rod adapter (CT)

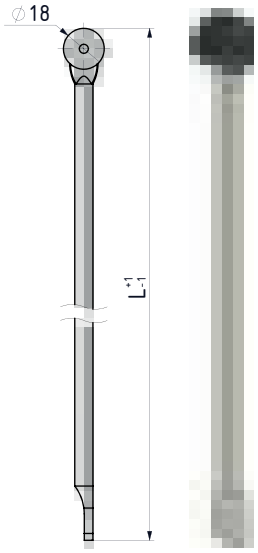

V: 3

L MM	PRODUCT CODE
400	IC 4-0-3-400
500	IC 4-0-3-500
600	IC 4-0-3-600
700	IC 4-0-3-700
800	IC 4-0-3-800
900	IC 4-0-3-900
1000	IC 4-0-3-1000

APPLICATION:
- Locks with three-point cam



ACCESSORIES:
- Round-rod guide (CY)

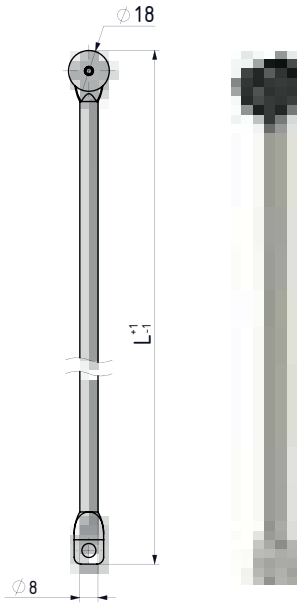

V: 4

L MM	PRODUCT CODE
400	IC 4-0-4-400
500	IC 4-0-4-500
600	IC 4-0-4-600
700	IC 4-0-4-700
800	IC 4-0-4-800
900	IC 4-0-4-900
1000	IC 4-0-4-1000

APPLICATION:
- With gear-box locks



ACCESSORIES:
- Round-rod guide (CY)

For other materials please check: pages 152 and 153

Group Code	Material	Finish	Version	Length
IC	4	0	V	L

For different 'L' Lengths, please contact us

tel | +90 212 721 44 44 fax | +90 212 721 44 45

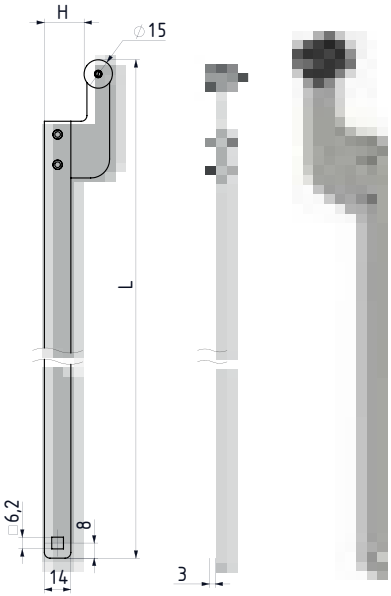

V: 1

H MM	L MM	PRODUCT CODE
27	1020	IL 4-0-1-27-1020
13	1020	IL 4-0-1-13-1020

APPLICATION:
- With gear-box locks



ACCESSORIES:
- Flat-rod guide (LY)

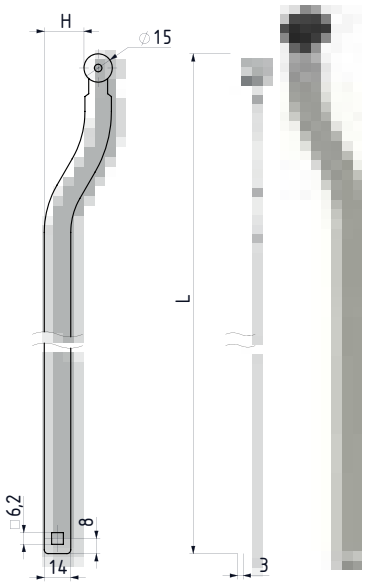

V: 2

H MM	L MM	PRODUCT CODE
21	1020	IL 4-0- 2-21-1020
16	1020	IL 4-0- 2-16-1020

APPLICATION:
- With gear-box locks

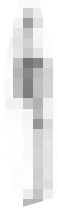

ACCESSORIES:
- Flat-rod guide (LY)

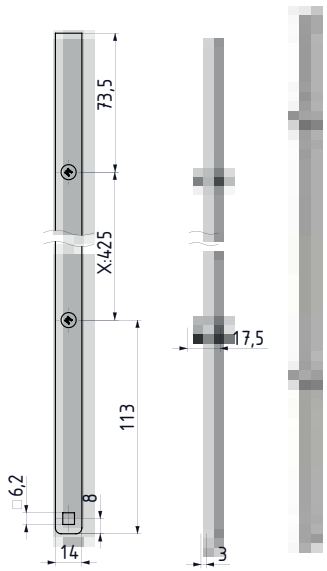

V: 1

X MM	PRODUCT CODE
575	ILP 4-0-1-575

APPLICATION:
- With gear-box locks



ACCESSORIES:
- Flat-rod guide (LY)
- Dual roller catcher (LKY)

For other materials please check: page 161

Group Code	Material	Finish	Version	Offset	Length
IL	4	0	V	H	L

Group Code	Material	Finish	Version	Length Between Pins
ILP	4	0	1	X

For different 'L' Lengths, please contact us

PUSH-TO-CLOSE LOCK

016

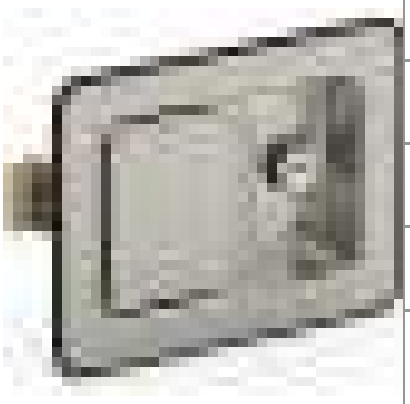

RoHS

IP 54

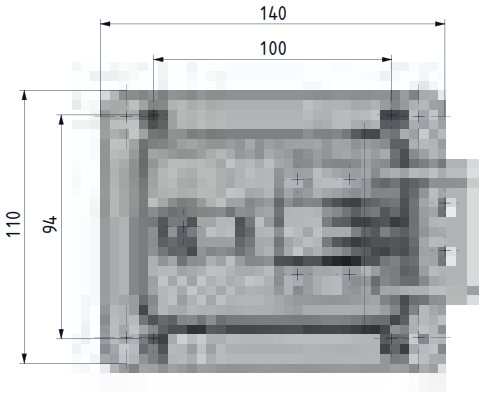

- Slam-shut operation; brass cam
- Can be opened from inside by moving cam

MATERIAL
Stainless Steel (AISI 304)



CAM STRIKING PLATE

016 A740

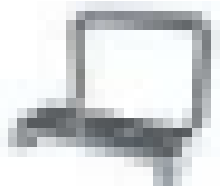

- Striking plate. Custom sizes available

MATERIAL
Stainless Steel (AISI 304)

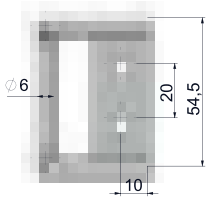

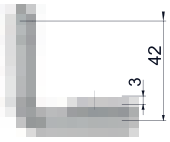

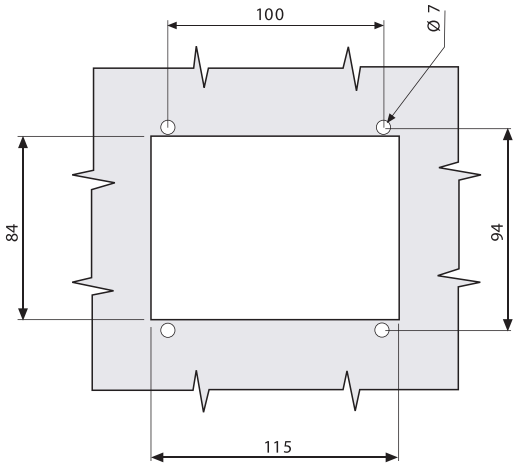

Cut out

SPECIFICATIONS	DD
Stainless steel dust cap Keyed alike	03
Stainless steel dust cap Keyed differ	32

Group Code	Material	Finish	Cylinder	Version
016	4	0	DD	1

For other materials please check: page 90

tel | +90 212 721 44 44 fax | +90 212 721 44 45

416 PUSH-TO-CLOSE LOCK

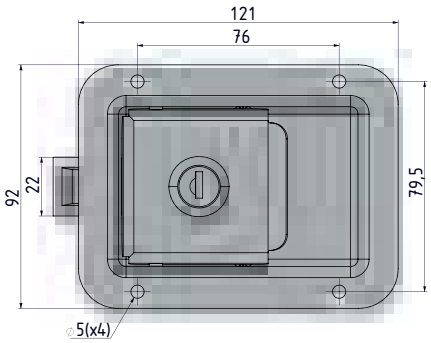

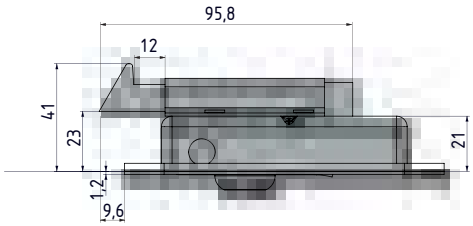

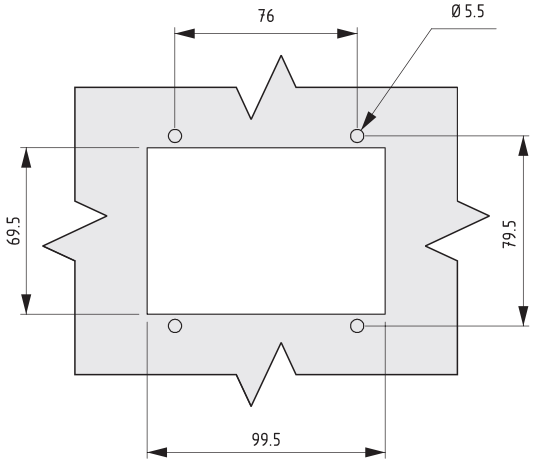

Cut out

RoHS

IP 54

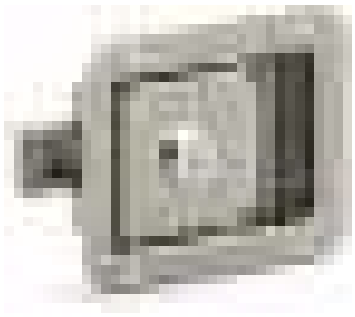

- Slam-shut operation
- Can be opened from inside by moving cam

MATERIAL
Stainless Steel (AISI 304)

SPECIFICATIONS	DD
Stainless steel dust cap Keyed alike	03
Stainless steel dust cap Keyed differ	32

Group Code	Material	Finish	Cylinder
416	4	0	DD

MINI QUARTER TURN – SPRING LOADED

266

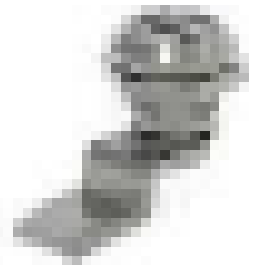

NEW

RoHS

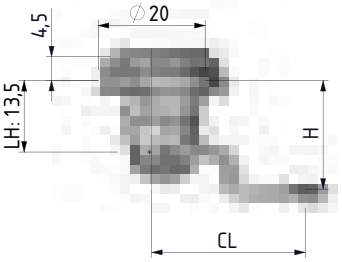

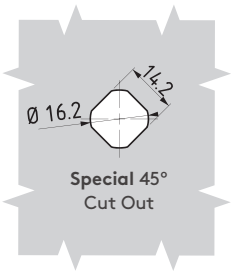

- Specially designed internal spring provides 1.5 mm of compression
- IP 66 (Nema 4), optional

MATERIAL
Stainless Steel (AISI 3.....)

Note: For different drivers please contact Essentra Components

For other materials please check: page 233

6 mm Square	7 mm Triangular	Slot
DD 26	DD 37	DD 42

Group Code	Material	Finish	Driver No	Cam
266	4	0	DD	CC

MINI QUARTER TURN – SPRING LOADED

066

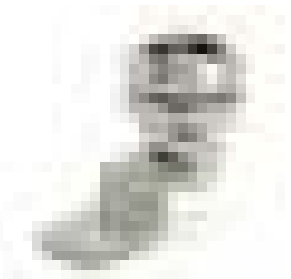

RoHS

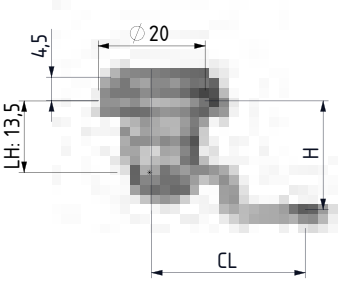

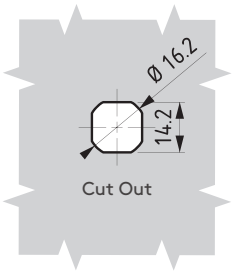

- Specially designed internal spring provides 1 mm of compression
- Sealing washer not supplied
- There is no IP 65 version of this lock

MATERIAL
Stainless Steel (AISI 3.....)



Application key code: 267

MATERIAL
Zamak DIN-EN 1774-ZnAl4Cu1

FINISH
Chrome plated

For other materials please check: page 232

6 mm Square	7 mm Triangular	Slot
DD 26	DD 37	DD 42

Group Code	Material	Finish	Driver No	Cam
066	4	0	DD	CC

tel | +90 212 721 44 44 fax | +90 212 721 44 45

064 QUARTER TURN – SPRING LOADED

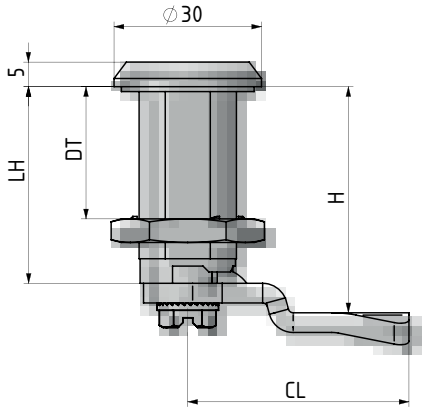

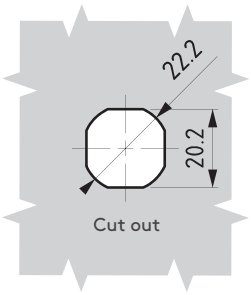

RoHS

IP 65

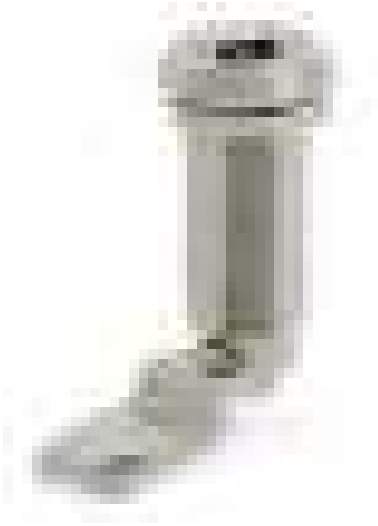

D T	LH
30	40
40	50
50	60

- Specially designed internal spring provides 1.5 mm of compression
- IP 66 (Nema 4), optional

MATERIAL
Stainless Steel (AISI 3.....)

Note: For different drivers please contact Essentra Components

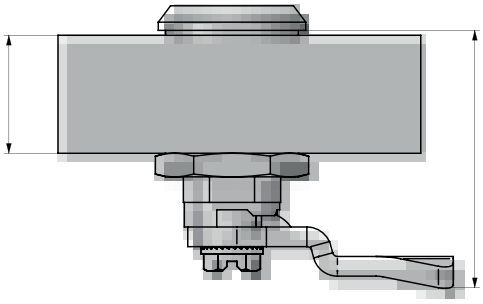

DT
DOOR THICKNESS

LH
HOUSING LENGTH

3 mm Double bit		5 mm Double bit		8 mm Square		7 mm Triangular		8 mm Triangular		Railway	
DD		DD		DD		DD		DD		DD	
13		15		28		37		38		88	

Group Code	Material	Finish	Driver No	Door Thickness	Cam
064	4	0	DD	DT	CC

For other materials please check: page 223

For cams please check page: 174

For keys please check pages: 189 - 191

QUARTER TURN – SPRING LOADED

060



RoHS

IP 65

L R

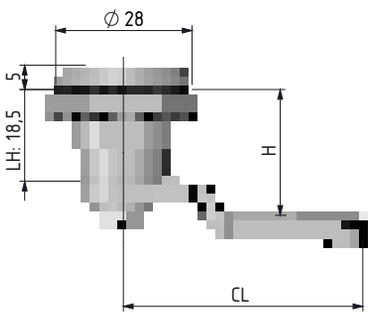

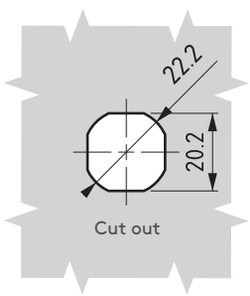

- Specially designed internal spring provides 1.5 mm of compression
- IP 66 (Nema 4), optional

MATERIAL
Stainless Steel (AISI 3.....)

Note: For different drivers please contact Essentra Components

For cams please check page: 174

For keys please check pages: 189 - 191

3 mm Double bit		5 mm Double bit		8 mm Square		7 mm Triangular		8 mm Triangular		Railway	
DD		DD		DD		DD		DD		DD	
13		15		28		37		38		88	

Group Code	Material	Finish	Driver No	Cam
060	4	0	DD	CC

QUARTER TURN – SPRING CAM

160

NEW



RoHS

L R

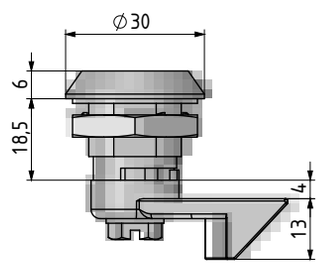

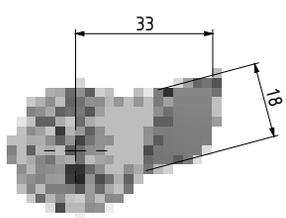

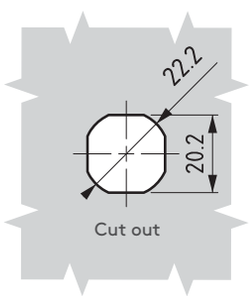

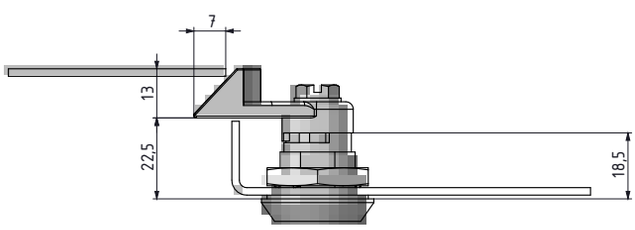

- Spring-loaded cam provides depress-to-lock action
- Distance between inside of lock face and front of cam fixed at 22.5 mm
- There is no IP 65 version of this lock,due to spring loaded cam

MATERIAL
Stainless Steel (AISI 3.....)

For other materials please check: page 216

Group Code	Material	Finish	Driver No	Door Direction
160	4	0	DD	

DOOR DIRECTION	
Right hand	001
Left hand	002

tel | +90 212 721 44 44 fax | +90 212 721 44 45

260 QUARTER TURN – PADLOCKABLE

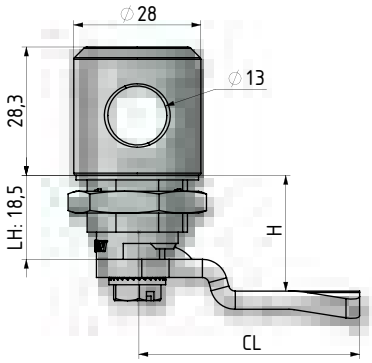

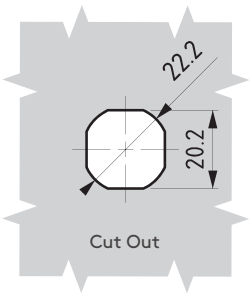

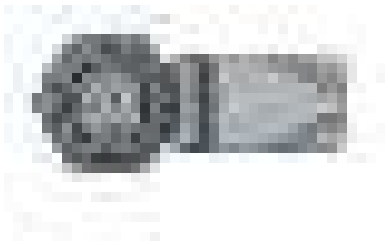

NEW

RoHS

IP 65

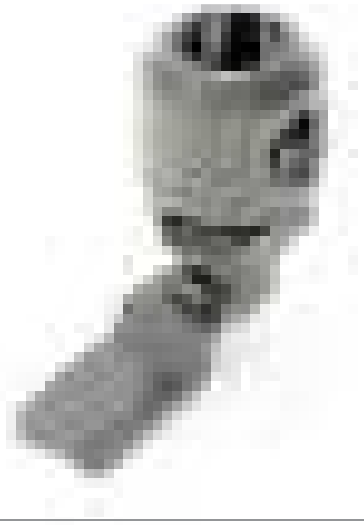

- Padlockable version
- Can be used with different drivers

MATERIAL
Stainless Steel (AISI 3.....)

Application 1



Application 2



For other materials please check:
page 217

MATERIAL	M	FINISH	F
Zamak	1	Chrome plated	1
		Black coated	2

Group Code	Housing		Driver		Driver No	Cam
260	4	0	4	0	DD	CC

For cams please check pages: 170 - 171
For drivers please check page: 458
For keys please check pages: 189 - 191

MINI COMPRESSION LOCK — 140

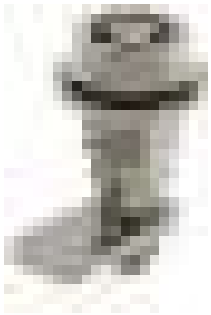

RoHS

IP 65

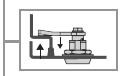



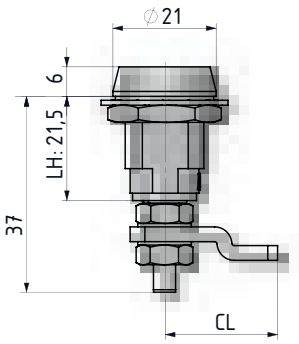

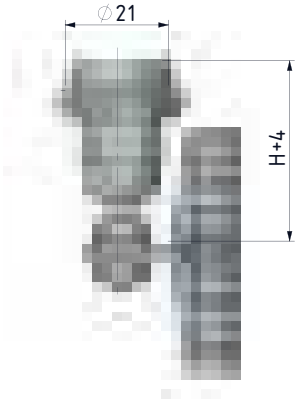

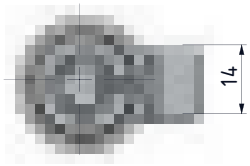

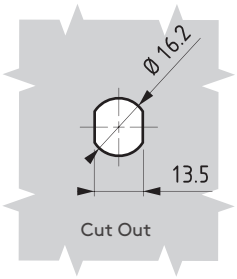

- Used for cabinets that require better sealing under vibrating conditions
- 4 mm compression ratio
- Provides noise isolation
- Driver and cam alternatives available

MATERIAL
HOUSING: Stainless Steel (AISI 316)
DRIVER: Stainless Steel (AISI 316)
CAM: Stainless Steel (AISI 304)
NUT: Stainless Steel (AISI 30

For other materials please check: 228

CAM	STOCK CODE	CC	CH	CL	H GRİP MIN	H GRİP MAX
1	30405735Y	01	0	23	26.2	29.4
2	30405740Y	02	1	23	25.2	28.4
3	30405608Y	03	3.8	23	22.4	25.6
4	30405609Y	04	7	23	19.2	22.4
5	30405610Y	05	10.2	23	16	19.2
6	30405611Y	06	13.4	23	12.8	16
7	30405749Y	07	16.6	23	9.6	12.8
8	30405613Y	08	19.8	23	6.4	9.6
9	30405748Y	09	23	23	3.2	6.4

DRIVERS

Tubular key

DD 93



4 mm Hexagon

DD 64



Slot

DD 45



DUST CAP — 140 A1

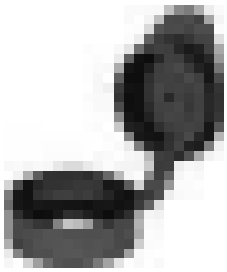

(Order separately)

MATERIAL : Polyurethane

Group Code	Material	Finish	Driver No	Cam
140	4	0	DD	CC

For keys please check pages: 189 - 191

tel | +90 212 721 44 44 fax | +90 212 721 44 45

1060 QUARTER TURN – SPRING LOADED



RoHS

IP 65

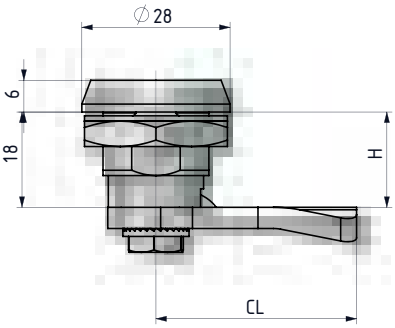

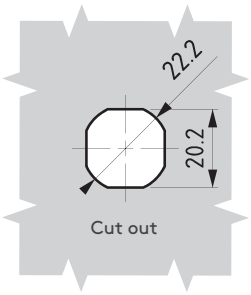

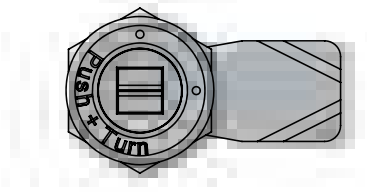

- Vibration proof quarter turn
- Opening the lock only possible by pushing and rotating the driver by the key

MATERIAL

HOUSING: Stainless Steel (AISI 316)
DRIVER: Stainless Steel (AISI 316)
CAM: Stainless Steel (AISI 304)
NUT: Stainless Steel (AISI 304)

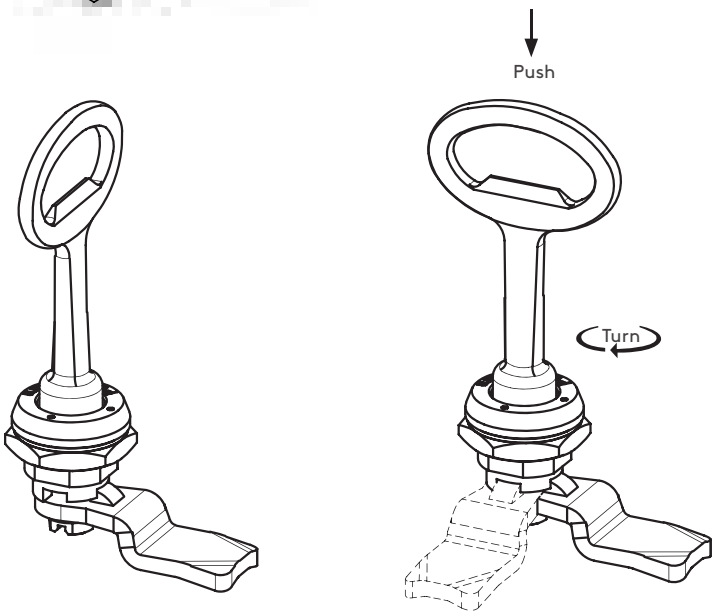

Locked position

Unlock position

Note: For different drivers please contact Essentra Components

3 mm Double bit		5 mm Double bit		8 mm Square		7 mm Triangular		8 mm Triangular		Railway	
DD		DD		DD		DD		DD		DD	
13		15		28		37		38		88	

Group Code	Material	Finish	Driver No	Cam	Door Direction
1060	4	0	DD	CC	

DOOR DIRECTION	
Right hand	001
Left hand	002

For cams please check page: 174

For keys please check pages: 189 - 191

COMPRESSION LOCK

040



RoHS

IP 65

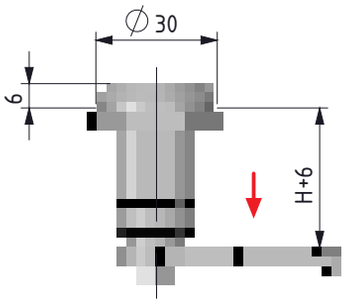

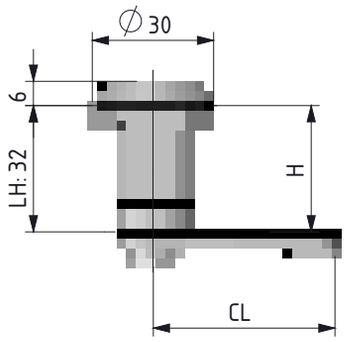

- Used for cabinets that require better sealing under vibrating conditions
- Provides 6 mm of compression
- Provides noise isolation
- Different drivers / cams available
- Standard cams without stopper required for these locks
- The lock has been tested according to the DIN EN 61373 Category 1-B for vibration and shock.
- Working Temprature Range: -50/+80 C
  M22 Nut :
  should be fixed with 20 Nm
  M10 Nut:
  should be fixed with 10 Nm
- Threadlocker is applied to the nut threads to get extra fastness against vibration and shock
- Max load capacity: 562 N

MATERIAL

HOUSING: Stainless Steel (AISI 316)
DRIVER: Stainless Steel (AISI 316)
CAM: Stainless Steel (AISI 304)
NUT: Stainless Steel (AISI 304)

Note: For different drivers please contact Essentra Components

For other materials please check: page 226

V: 7

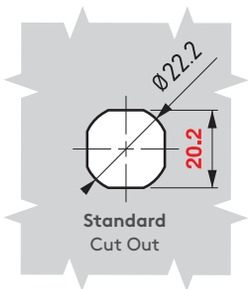

Standard Cut Out

Attention

V: 8

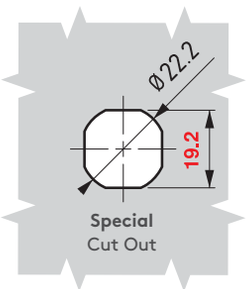

Special Cut Out

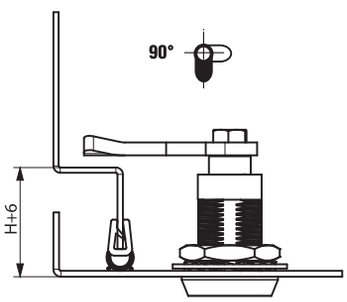

The first 90° of key rotation turns the cam to locking position

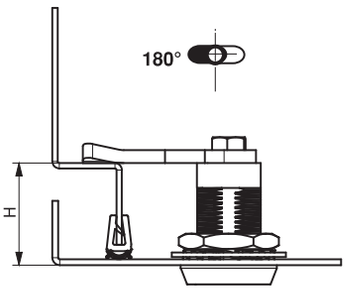

Further key rotation 180° applies 6mm compression

DRIVERS

KNOB

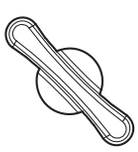

DD 94

5 mm Double bit	Railway	8 mm Square	2X4 mm Slot
DD 15	DD 88	DD 28	DD 42

3 mm Double bit	7 mm Triangular	8 mm Triangular
DD 13	DD 37	DD 38

DOOR DIRECTION

Right hand	001
Left hand	002

Group Code	Version	Material	Finish	Driver No	Cam	Door Direction
040	V	4	0	DD	CC	

For cams please check page: 174
For keys please check pages: 189 - 191

tel | +90 212 721 44 44 fax | +90 212 721 44 45

040 COMPRESSION LOCK

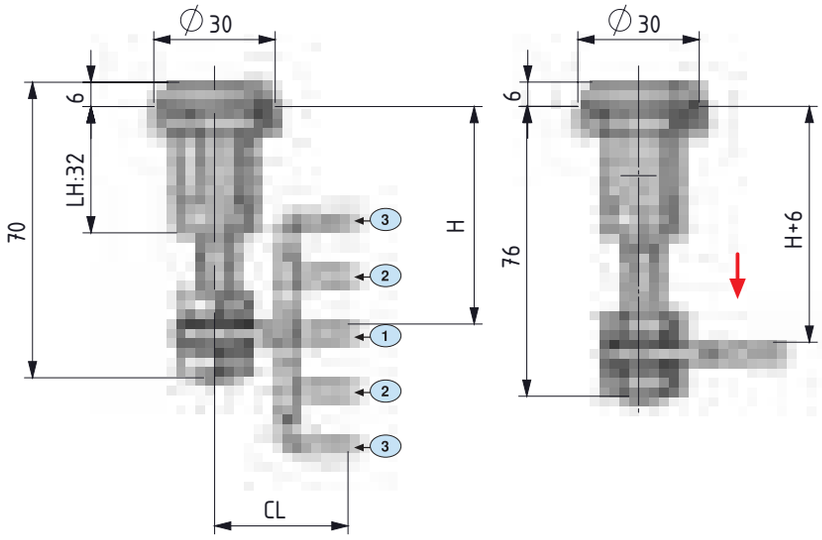

RoHS
IP 65



- Used for cabinets that require better sealing under vibrating conditions
- 6 mm of compression
- Wide grip range with adjustable screw
- Noise isolation
- Different drivers / cams available
- Three different cam alternatives available
- The lock has been tested according to the DIN EN 61373 Category 1-B for vibration and shock.
- Working Temprature Range: -50/+80 C
  M22 Nut :
  should be fixed with 20 Nm
  M10 Nut:
  should be fixed with 10 Nm
- Threadlocker is applied to the nut threads to get extra fastness against vibration and shock
- Max load capacity: 562 N

V: 5

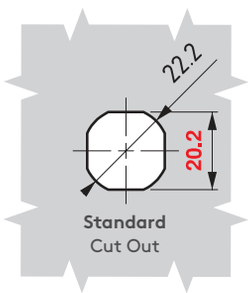

Standard Cut Out

Attention

V: 6

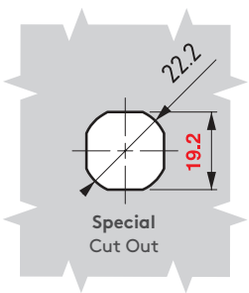

Special Cut Out

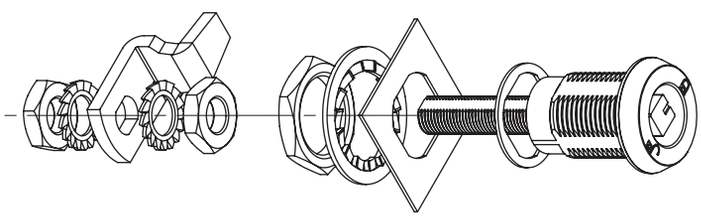

MATERIAL
HOUSING: Stainless Steel (AISI 316)
DRIVER: Stainless Steel (AISI 316)
CAM: Stainless Steel (AISI 304)
NUT: Stainless Steel (AISI 304)

CAM	STOCK CODE	CC	CH	CL	POSITION	H GRİP MIN	H GRİP MAX
1	30405565Y	01	0	33	Flat	41	58
2	30405566Y	02	14	33	Up	27	44
					Down	55	72
3	30405567Y	03	27,5	33	Up	13,5	30,5
					Down	68	85

DOOR DIRECTION	
Right hand	001
Left hand	002

Note: For different drivers please contact Essentra Components

Group Code	Version	Material	Finish	Driver No	Cam	Door Direction
040	V	4	0	DD	CC	

For other materials please check: page 227

COMPRESSION LOCK — 540

SHORT HOUSING



RoHS

IP 65

L

R

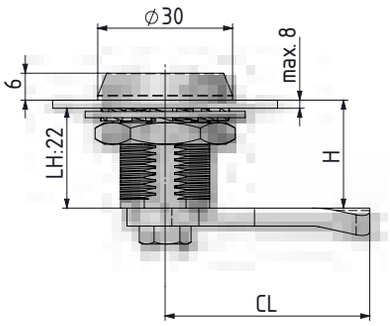

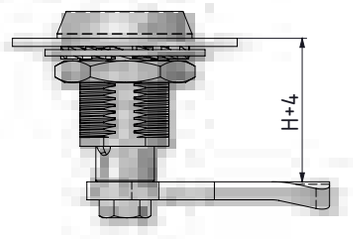

- Used for cabinets that require better sealing under vibrating conditions
- Provides 4 mm of compression
- Provides noise isolation
- Different drivers/cams available
- Standard cams without stopper required for these locks
- The lock has been tested according to the DIN EN 61373 Category 1-B for vibration and shock.
- Working Temprature Range: -50/+80 C
  M22 Nut :
  should be fixed with 60 Nm
  M10 Nut:
  should be fixed with 10 Nm
  Threadlocker is applied to the nut threads to get extra fastness against vibration and shock
- Max load capacity: 562 N

MATERIAL

HOUSING:	Stainless Steel (AISI 316)
DRIVER:	Stainless Steel (AISI 316)
CAM:	Stainless Steel (AISI 304)
NUT:	Stainless Steel (AISI 304)

V: 1

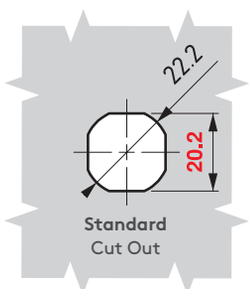

Standard
Cut Out

Attention

V: 3

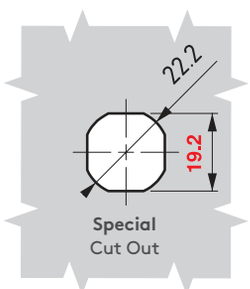

Special
Cut Out

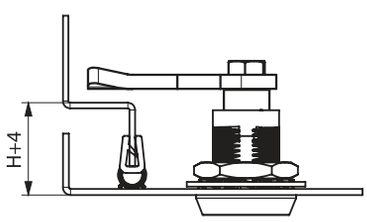

The first 90° of key rotation turns the cam to locking position

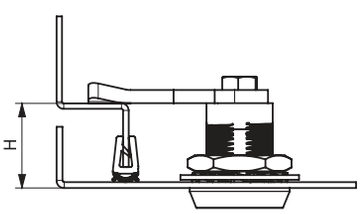

Further key rotation 180° applies 4 mm compression

DRIVERS

3 mm Double bit	5 mm Double bit	Railway	8 mm Square	2X4 mm Slot
DD 13	DD 15	DD 88	DD 28	DD 42

7 mm Triangular	8 mm Triangular
DD 37	DD 38

DOOR DIRECTION	
Right hand	001
Left hand	002

Note: For different drivers please contact Essentra Components

Group Code	Version	Material	Finish	Driver No	Cam	Door Direction
540	V	4	0	DD	CC	

For cams please check pages: 174

For keys please check pages: 189 - 191

tel | +90 212 721 44 44 fax | +90 212 721 44 45

540 COMPRESSION LOCK

SHORT HOUSING



RoHS

IP 65

L

R

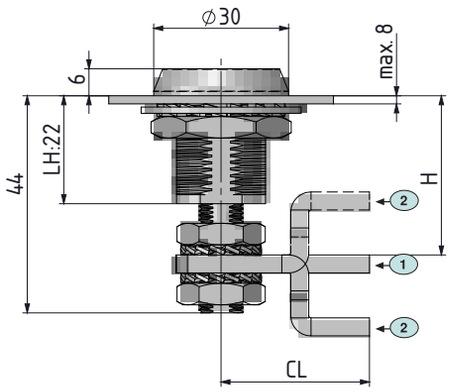

V: 2

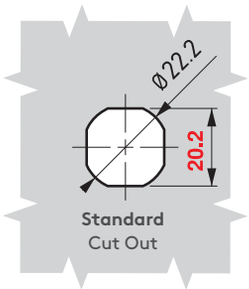

Attention

V: 4

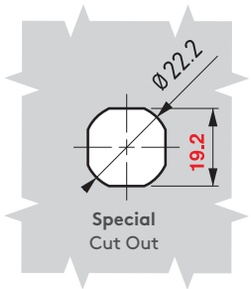

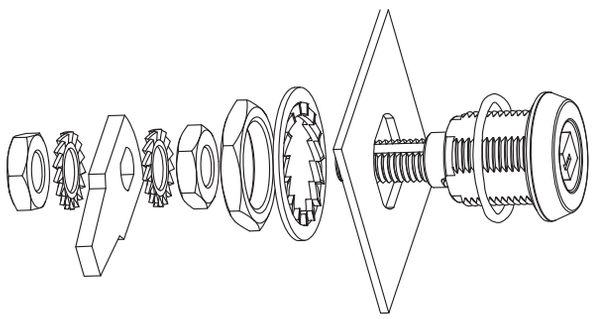

- Used for cabinets that require better sealing under vibrating conditions
- 4 mm of compression
- Wide grip range with adjustable screw
- Noise isolation
- Different drivers / cams available
- Three different cam alternatives available
- The lock has been tested according to the DIN EN 61373 Category 1-B for vibration and shock.
- Working Temprature Range: -50/+80 C
  M22 Nut :
  should be fixed with 60 Nm
  M10 Nut:
  should be fixed with 10 Nm
- Threadlocker is applied to the nut threads to get extra fastness against vibration and shock
- Max load capacity: 562 N

MATERIAL

HOUSING: Stainless Steel (AISI 316)
DRIVER: Stainless Steel (AISI 316)
CAM: Stainless Steel (AISI 304)
NUT: Stainless Steel (AISI 304)

CAM	CC	CH	CL	H GRIP MIN	H GRIP MAX
1	01	0	33	28	38
2	02	14	33	14	52

DOOR DIRECTION	
Right hand	001
Left hand	002

Note: For different drivers please contact Essentra Components

Group Code	Version	Material	Finish	Driver No	Cam	Door Direction
540	V	4	0	DD	CC	

For keys please check pages: 189 - 191

HYGIENIC COMPRESSION LOCK

440



RoHS

IP69K

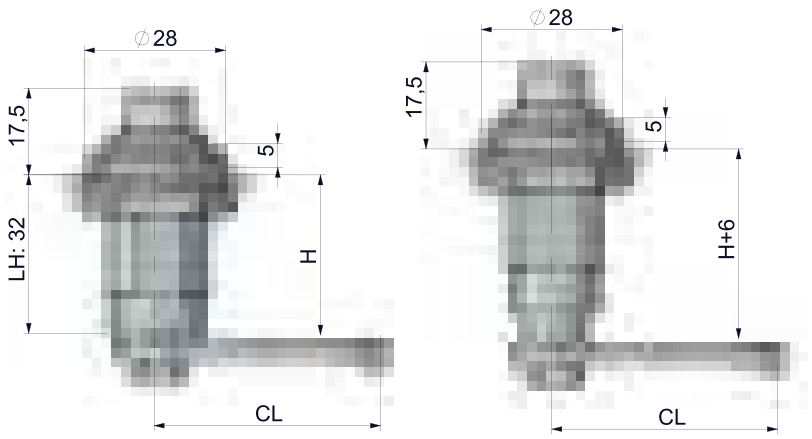

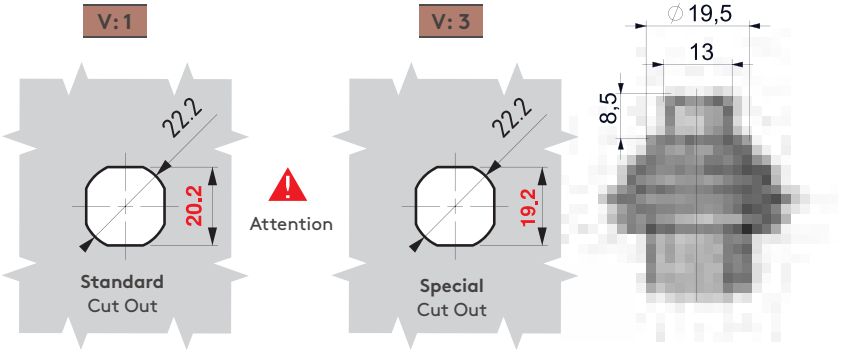

- Dirt resistant and easy to clean
- Specially designed for hygiene requirements
- Used for cabinets that require better sealing under vibrating conditions
- 6 mm of compression
- Noise isolation
- Different drivers / cams available
- The lock has been tested according to the DIN EN 61373 Category 1-B for vibration and shock.
- The lock has been tested according to the GS-NV 6:2015/12 for hygiene requirements
- Working Temprature Range: -50/+80 C
  M22 Nut :
  should be fixed with 60 Nm
  M10 Nut:
  should be fixed with 10 Nm
- Threadlocker is applied to the nut threads to get extra fastness against vibration and shock
- Max load capacity: 562 N

MATERIAL

HOUSING:	Stainless Steel (AISI 316)
DRIVER:	Stainless Steel (AISI 316)
CAM:	Stainless Steel (AISI 304)
NUT:	Stainless Steel (AISI 304)
ORING:	Silicone



METAL KEY

368-94

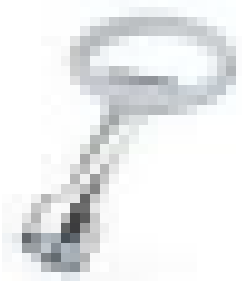

MATERIAL & FINISH
Zamak DIN-EN 1774-ZnAl4Cu1
Chrome plated

DRIVERS

Special		8 mm Square	
DD	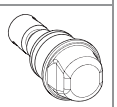	DD	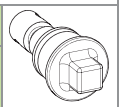
99		28	

DOOR DIRECTION

Right hand	001
Left hand	002

Group Code	Version	Material	Finish	Driver No	Cam	Door Direction
440	V	4	0	DD	CC	

tel | +90 212 721 44 44 fax | +90 212 721 44 45

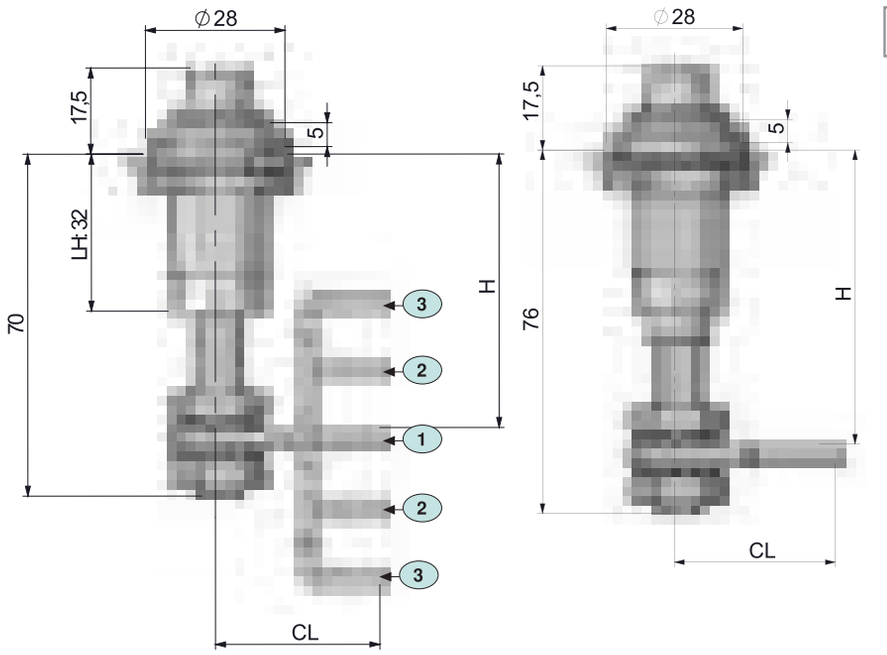

440

HYGIENIC COMPRESSION LOCK



- Dirt resistant and easy to clean
- Specially designed for hygiene requirements
- Used for cabinets that require better sealing under vibrating conditions
- 6 mm of compression
- Wide grip range with adjustable screw
- Noise isolation
- Different drivers / cams available
- Three different cam alternatives available
- The lock has been tested according to the DIN EN 61373 Category 1-B for vibration and shock.
- The lock has been tested according to the GS-NV 6:2015/12 for hygiene requirements
- Working Temprature Range: -50/+80 C
  M22 Nut :
  should be fixed with 60 Nm
  M10 Nut:
  should be fixed with 10 Nm
- Threadlocker is applied to the nut threads to get extra fastness against vibration and shock
- Max load capacity: 562 N

MATERIAL

HOUSING:	Stainless Steel (AISI 316)
DRIVER:	Stainless Steel (AISI 316)
CAM:	Stainless Steel (AISI 304)
NUT:	Stainless Steel (AISI 304)
ORING:	Silicone

V: 2

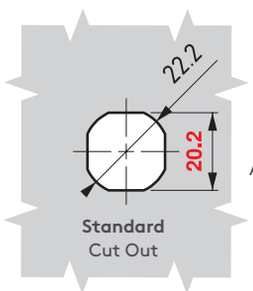

Standard Cut Out

Attention

V: 4

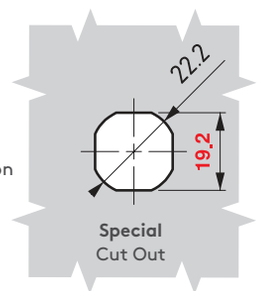

Special Cut Out

DRIVERS

Special		8 mm Square	
DD		DD	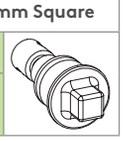
99		28	

DOOR DIRECTION

Right hand	001
Left hand	002

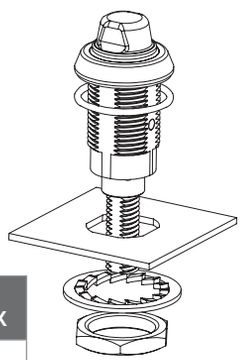

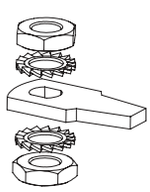

CAM	STOCK CODE	CC	CH	CL	POSITION	H GRİP MIN	H GRİP MAX
1	30405565Y	01	0	33	Flat	41	58
2 	30405566Y	02	14	33	Up	27	44
					Down	55	72
3 	30405567Y	03	27,5	33	Up	13,5	30,5
					Down	68	85

Group Code	Version	Material	Finish	Driver No	Cam	Door Direction
440	V	4	0	DD	CC	

For cams please check pages: 174

HYGIENIC LOCK

460

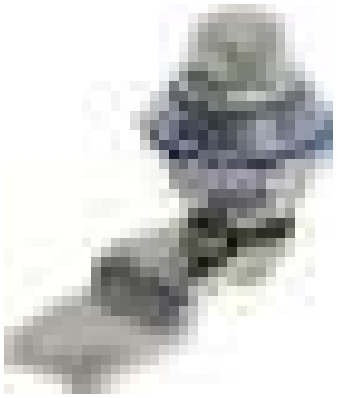

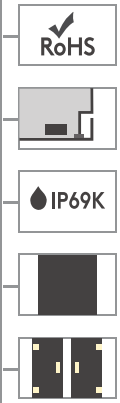

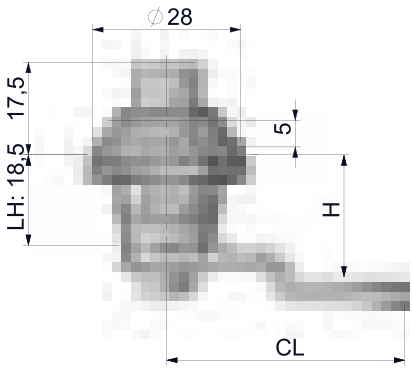

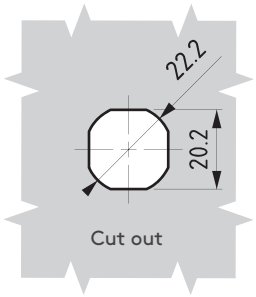

- Dirt resistant and easy to clean
- The lock has been tested according to the GS-NV 6:2015/12 for hygiene requirements
- Specially designed for hygiene requirements

MATERIAL
HOUSING: Stainless Steel (AISI 316)
DRIVER: Stainless Steel (AISI 316)
CAM: Stainless Steel (AISI 304)
ORING: Silicone

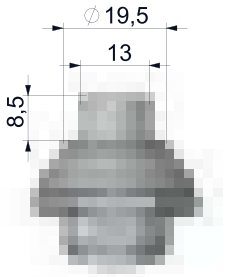

METAL KEY

368-94

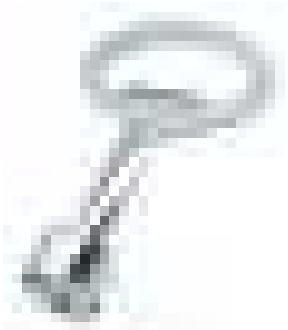



MATERIAL
Zamak DIN-EN 1774-ZnAl4Cu1

FINISH
Chrome plated

Group Code	Material	Finish	Cam
460	4	0	CC

tel | +90 212 721 44 44 fax | +90 212 721 44 45

045 COMPRESSION - SPRING LATCH

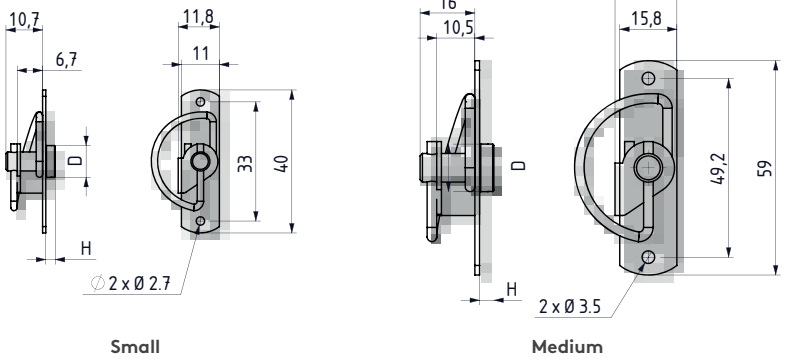

Small

Medium

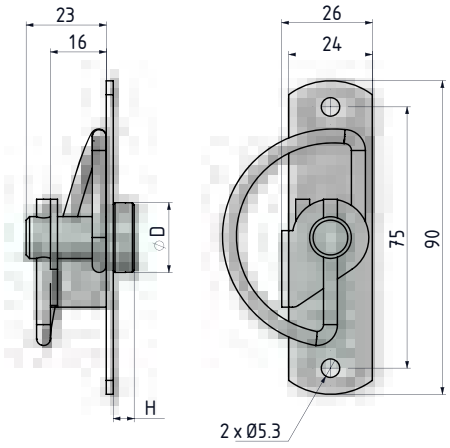

Large

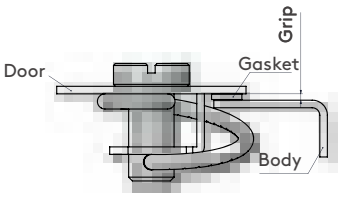

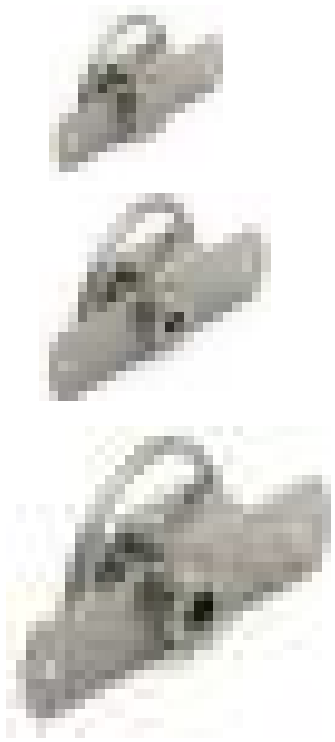

- Fix small panels to frame with ease
- Quarter-turn locking
- Easy assembly
- For doors with a bend of 24 mm

MATERIAL

BODY:	Stainless steel
DRIVER:	Stainless steel
SPRING:	Stainless steel

For other materials please check: page 229

	DRIVERS			
V	DD	Driver name	Dø	H
1	12	Slot - Small	10	3
	13	Knurled - Small	10.5	12
2	21	Hexagon Female 4 mm	12	3.5
	22	Slot - Medium	12	3.5
	23	Knurled - Small	13	17.5
3	31	Hexagon Female 8 mm	20	6
	32	Slot - Large	20	5



Hexagon Female



Slot



Knurled

CAMS		
CC	Cam name	VERSION
41	Smooth Spring - Small	1
42	Smooth Spring - Medium	2
52	Serrated Spring - Medium	2
43	Smooth Spring - Large	3
53	Serrated Spring - Large	3

VERSIONS	
V	Product
1	Small Spring Latch
2	Medium Spring Latch
3	Large Spring Latch

Group Code	Version	Material	Finish	Driver No	Cam
045	V	4	0	DD	CC

PADLOCKABLE - 'L' HANDLE

211



RoHS

IP 65





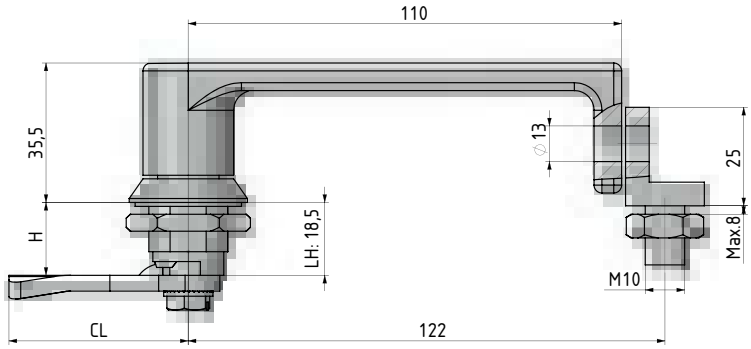

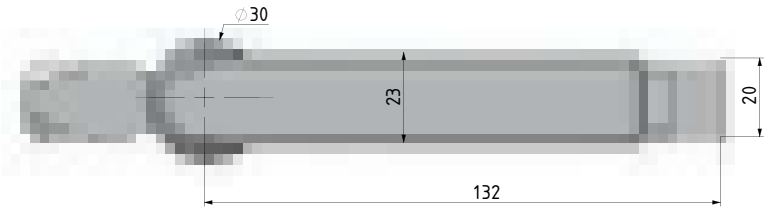

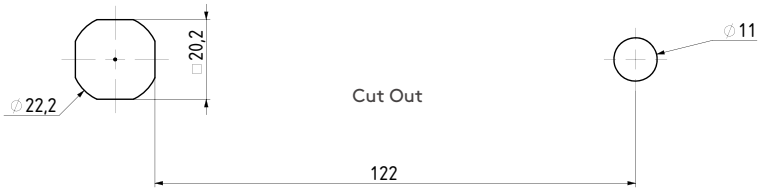

- Padlockable stainless steel lock can be used for outdoor enclosures.
- Suitable for hygenic cabinets and electrical enclosures.

MATERIAL

HOUSING: Stainless Steel (AISI 316)
HANDLE: Stainless Steel (AISI 316)
CAM: Stainless Steel (AISI 304)
NUT: Stainless Steel (AISI 304)



Group Code	Material	Finish	Cam
211	4	0	CC

For cams please check page: 174

tel | +90 212 721 44 44 fax | +90 212 721 44 45

562 PADLOCKABLE WING KNOB

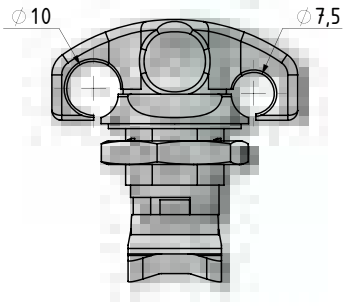

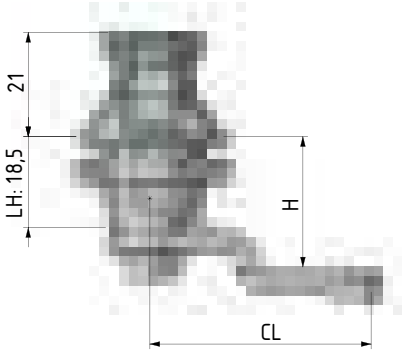

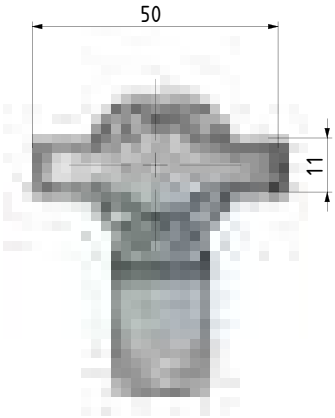

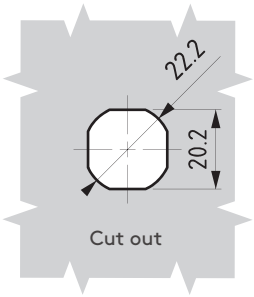





- Shackle diameter is
  Max. 9 mm for 10 mm hole
  Min. 7.5 mm 10 mm hole
- Shackle diameter is
  Max. 6 mm for 7.5 mm hole
  Min. 5 mm 7.5 mm hole

MATERIAL

HOUSING:	Stainless Steel (AISI 316)
KNOB:	Stainless Steel (AISI 316)
CAM:	Stainless Steel (AISI 304)
NUT:	Stainless Steel (AISI 304)

Group Code	Material	Finish	Cam
562	4	0	CC

For cams please check page: 174

QUARTER TURN – T HANDLE

110

RoHS

IP 65



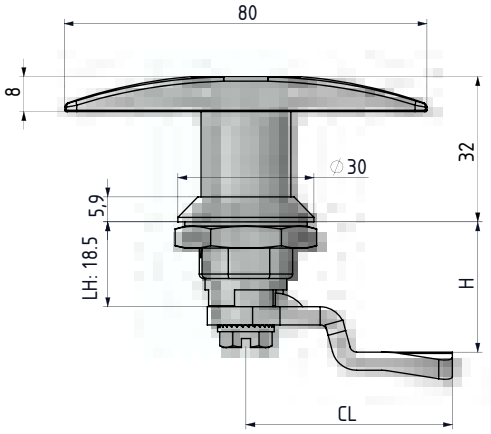

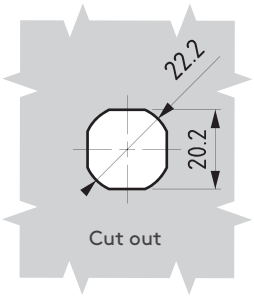

- Quarter-turn operation
- Stainless steel

MATERIAL

HOUSING: Stainless Steel (AISI 316)
HANDLE: Stainless Steel (AISI 316)
CAM: Stainless Steel (AISI 304)
GASKET: Rubber



No cylinder '00'



CYLINDER	SPECIFICATIONS	DD
	No cylinder	00
	Keyed alike	01
	Keyed differ	02
	Euro key (5333)	05
	CH751 (Stainless steel dust cap)	07

Group Code	Material	Finish	Cylinder	Cam
110	4	0	DD	CC

For other materials please check: page 254

For cams please check page: 174

tel | +90 212 721 44 44 fax | +90 212 721 44 45

111 QUARTER TURN – L HANDLE

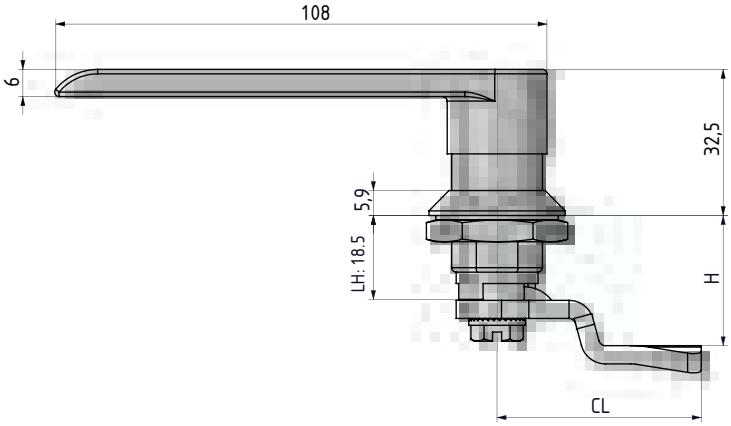

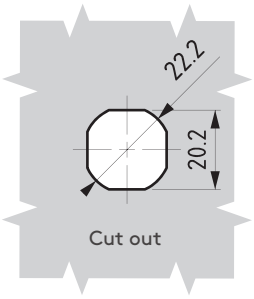

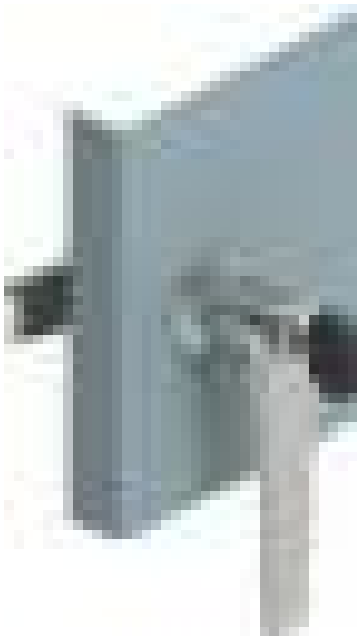



- Quarter-turn operation
- Stainless steel

MATERIAL

HOUSING: Stainless Steel (AISI 316)
HANDLE: Stainless Steel (AISI 316)
CAM: Stainless Steel (AISI 304)
GASKET: Rubber

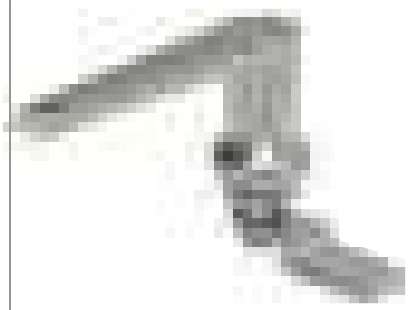

No cylinder '00'

CYLINDER	SPECIFICATIONS	DD
	No cylinder	00
	Keyed alike	01
	Keyed differ	02
	Euro key (5333)	05
	CH751 (Stainless steel dust cap)	07

Group Code	Material	Finish	Cylinder	Cam
111	4	0	DD	CC

For other materials please check: page 255

For cams please check page: 174

QUARTER TURN -WING KNOB 065



RoHS

IP 65

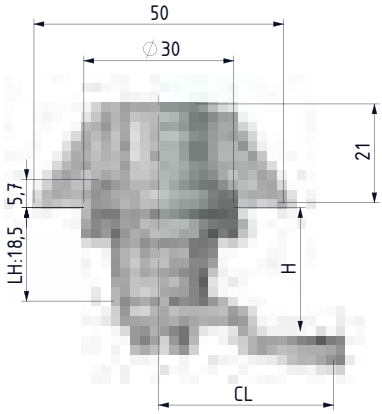

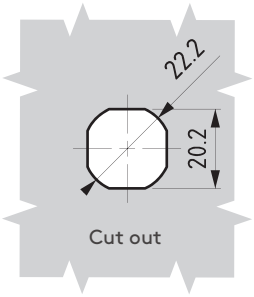

- Quarter turn operation
- All in stainless steel

MATERIAL

HOUSING:	Stainless Steel (AISI 316)
KNOB:	Stainless Steel (AISI 316)
CAM:	Stainless Steel (AISI 304)
GASKET:	Rubber



No cylinder '00'

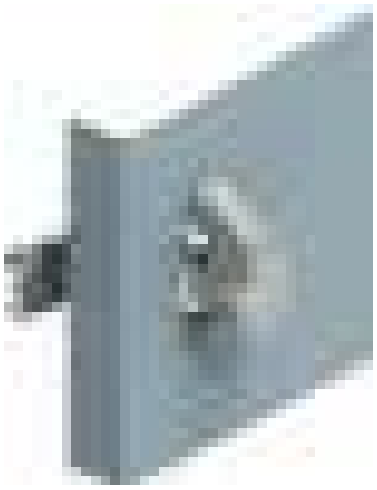

For other materials please check: page 252

CYLINDER	SPECIFICATIONS	DD
	No cylinder	00
	Keyed alike	01
	Keyed differ	02
	Euro key (5333)	05
	CH751 (Stainless steel dust cap)	07

Group Code	Material	Finish	Cylinder	Cam
065	4	0	DD	CC

For cams please check page: 174

tel | +90 212 721 44 44 fax | +90 212 721 44 45

265 PADLOCKABLE WING KNOB

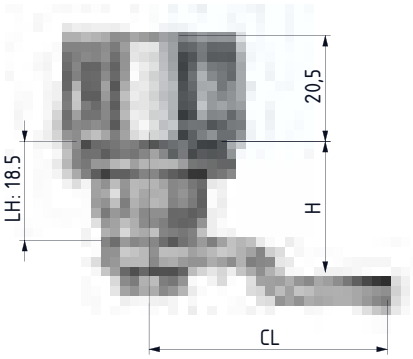

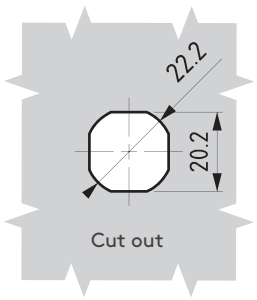





- Padlockable wing knob. Maximum shackle diameter 6 mm.
- All in Stainless steel

MATERIAL

HOUSING:	Stainless Steel (AISI 316)
KNOB:	Stainless Steel (AISI 316)
CAM:	Stainless Steel (AISI 304)
GASKET:	Rubber

DOOR DIRECTION	
Right hand	001
Left hand	002

Group Code	Material	Finish	Cam	Door Direction
265	4	0	CC	

For cams please check page: 174

CAM LOCK

063



NEW

RoHS

IP 65

L R

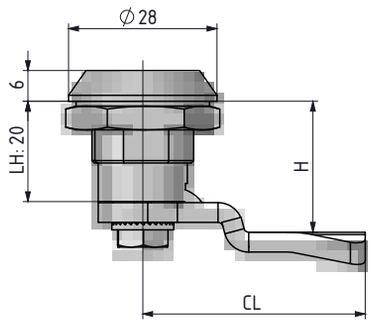

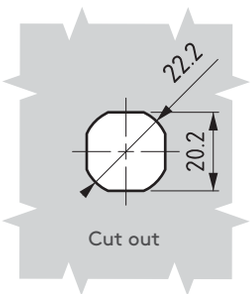

- Quarter turn operation
- All in stainless steel

MATERIAL

HOUSING:	Stainless Steel (AISI 316)
CAM:	Stainless Steel (AISI 304)
GASKET:	Rubber

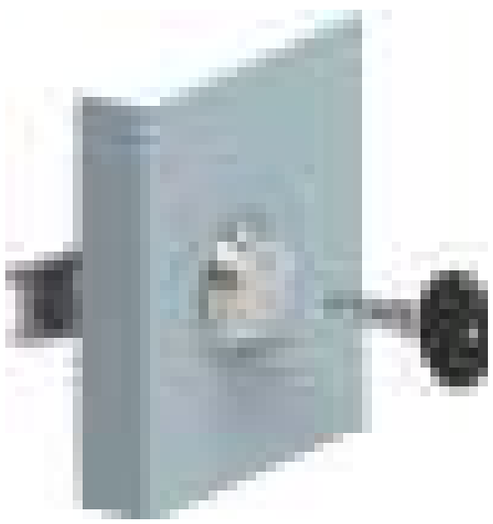

For other materials please check: page 249

CYLINDER	SPECIFICATIONS	DD
	No cylinder	00
	Keyed alike	03
	Keyed differ	32
	Euro key (5333)	05
	CH751 (Stainless steel dust cap)	07

Group Code	Material	Finish	Cylinder	Cam
063	4	0	DD	CC

For cams please check page: 174

tel | +90 212 721 44 44 fax | +90 212 721 44 45

411 PADLOCKABLE L HANDLE

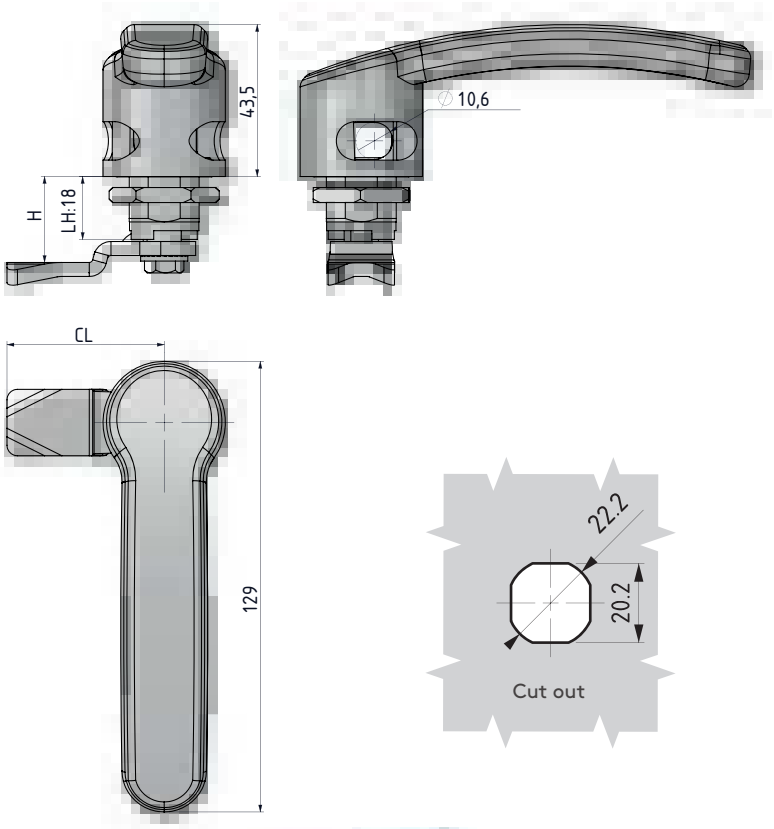

NEW

RoHS

IP 65

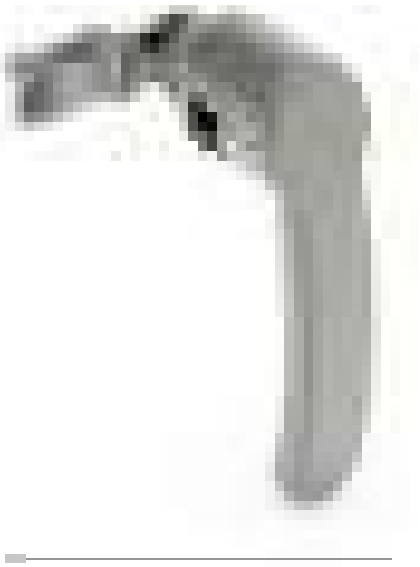

Padlockable L handle. Maximum shackle diameter 10 mm.

- All in Stainless steel

MATERIAL

HOUSING: Stainless Steel (AISI 316)
HANDLE: Stainless Steel (AISI 316)
CAM: Stainless Steel (AISI 304)
GASKET: Rubber



DOOR DIRECTION	
Right hand	001
Left hand	002

Group Code	Material	Finish	Cam	Door Direction
411	4	0	CC	

For cams please check page: 174

QUARTER TURN LOCK 860



RoHS

IP 65

- Used for cabinets under vibration conditions
- Different driver alternatives are available

APPLICATIONS
Railway cabinets offroad applications

MATERIAL
HOUSING: Stainless Steel (AISI 316)
DRIVER: Stainless Steel (AISI 316)
CAM: Stainless Steel (AISI 304)

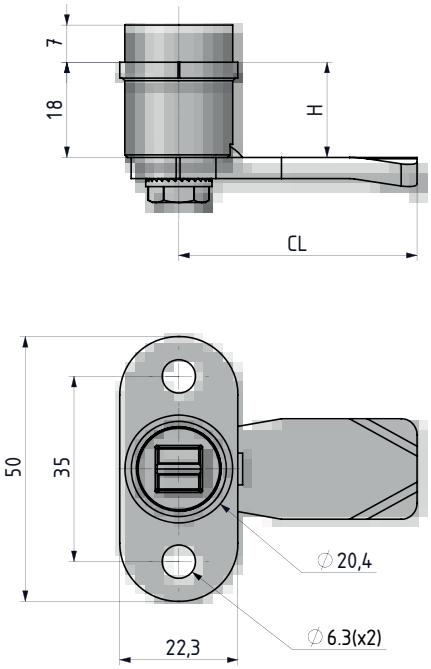

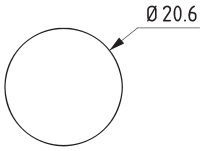

Cut out

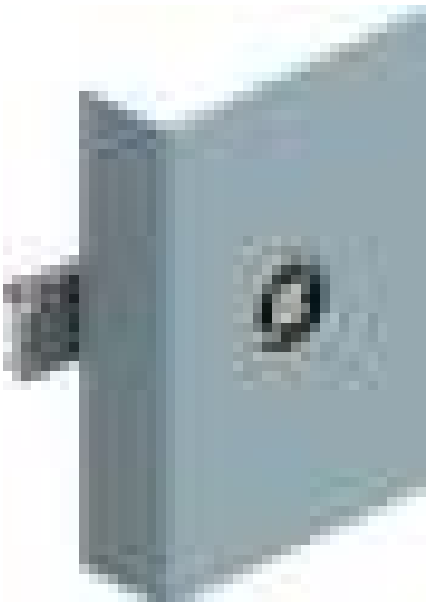

Group Code	Material	Finish	Driver No	Cam
860	4	0	DD	CC

For cams please check page: 174
For keys please check pages: 189 - 191
For drivers please check pages: 458

tel | +90 212 721 44 44 fax | +90 212 721 44 45

042 SCREW LOCK

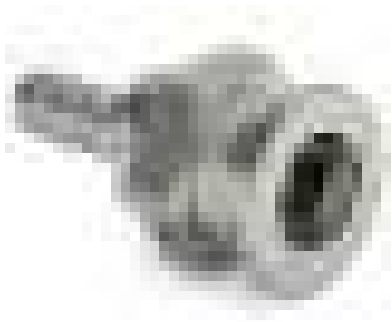

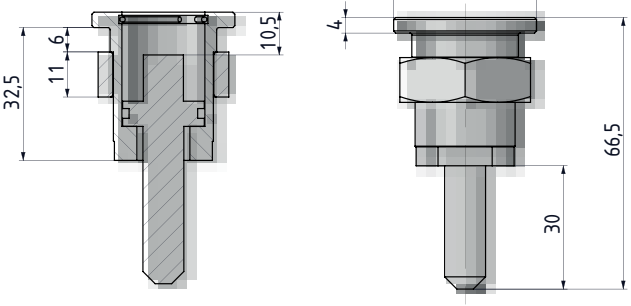

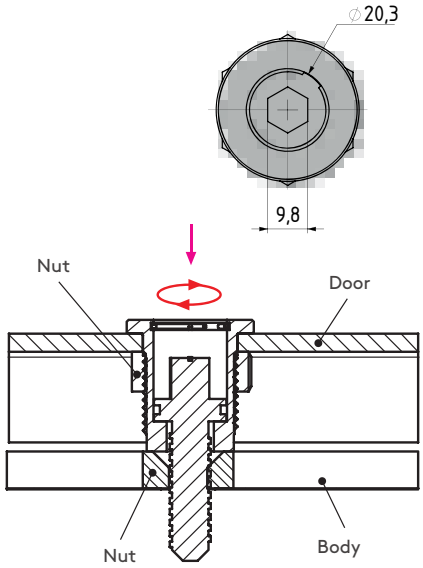

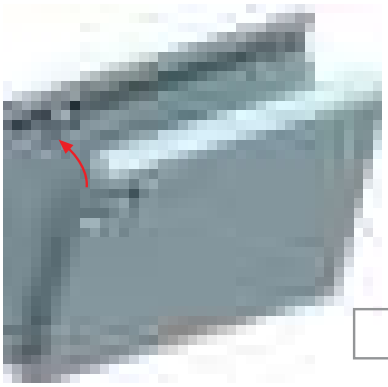

- Used to lock railway cabinets

APPLICATIONS
Railway cabinets

MATERIAL

BODY:	Stainless Steel (AISI 316)
DRIVER:	Stainless Steel (AISI 316)
NUT:	Stainless Steel (AISI 304)

Group Code	Material	Finish
042	4	0

276 SAFETY LATCH

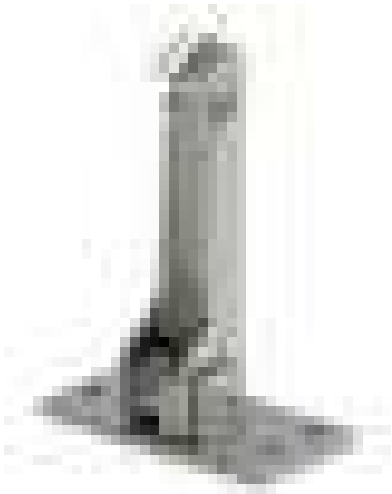

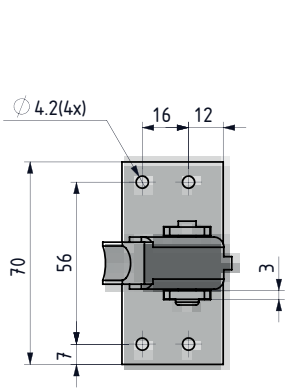

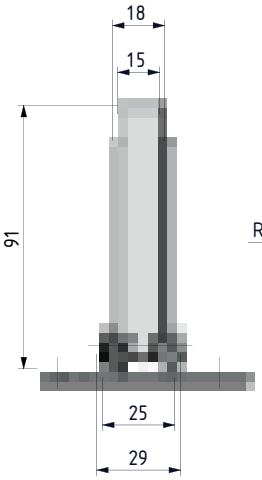

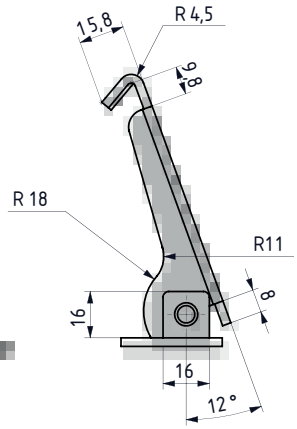

APPLICATIONS
Railway cabinets

MATERIAL
Stainless Steel

Group Code	Material	Finish
276	4	0

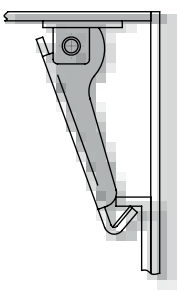

FAST FIND INDEX

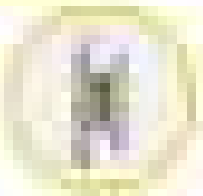
482-483

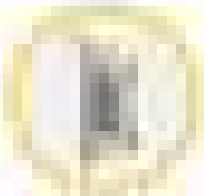
484-485

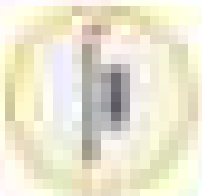
486-487

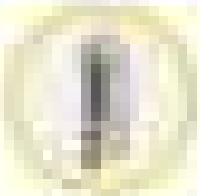
488

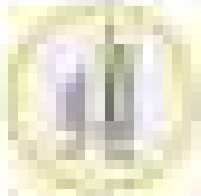
489

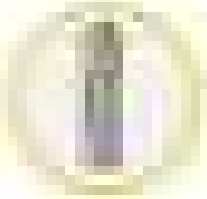
490-491

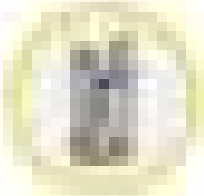
492

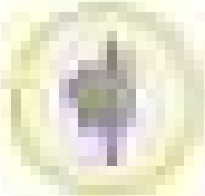
493

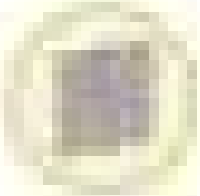
494

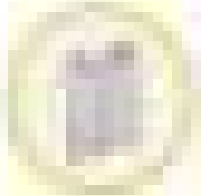
495

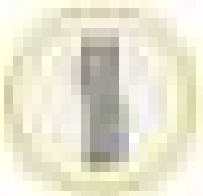
496

NEW

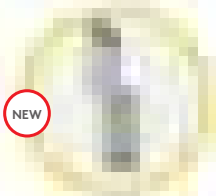
497

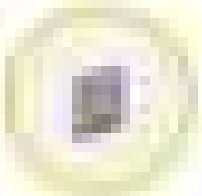
498

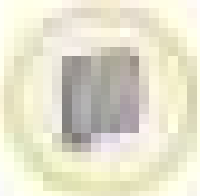
498

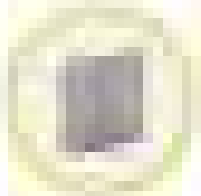
499


500

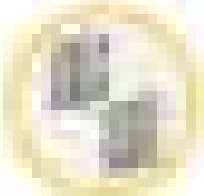
500-502

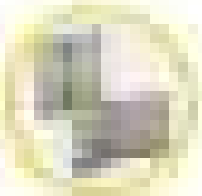
501-503

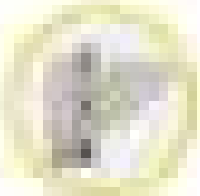
504

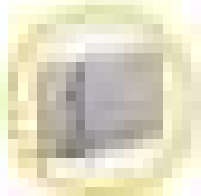
505

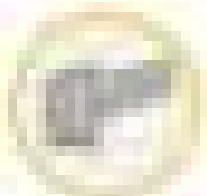
506-507

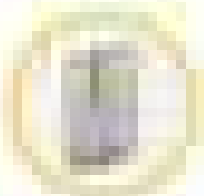
508

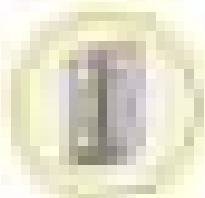
509

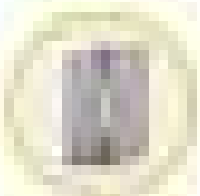
510

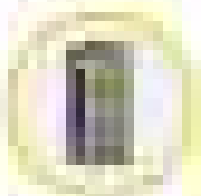
511


512

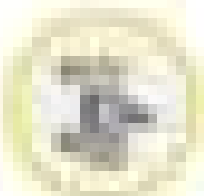
512


513

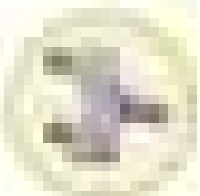
513

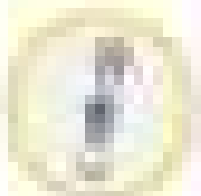
514

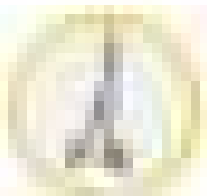
515

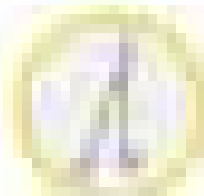
516

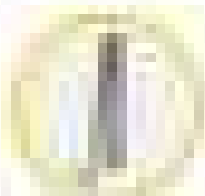
355



STAINLESS STEEL PRODUCTS-
HINGES-ACCESSORIES

480-515

mesan
ESSENTRA COMPONENTS

CONCEALED HINGE

295

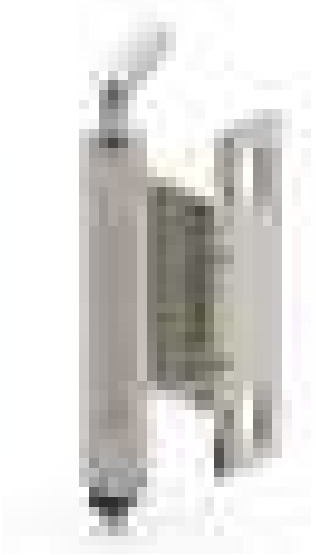

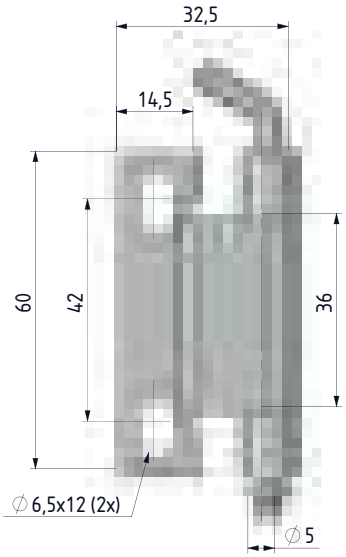

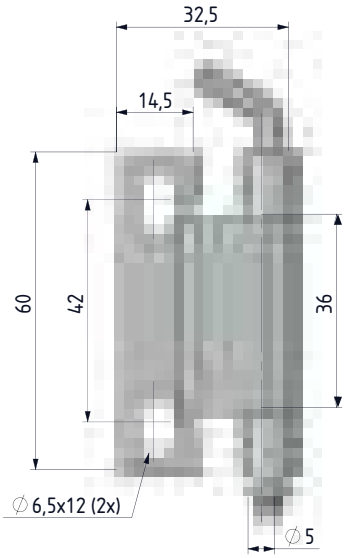

- For doors with a bend of between 20 mm and 24 mm
- Frame part is screwed on, door part is welded on
- Suitable for left- and right-hand application

MATERIAL
BODY: Stainless Steel (AISI 304)
PIN: Stainless Steel (AISI 303)

V: 1

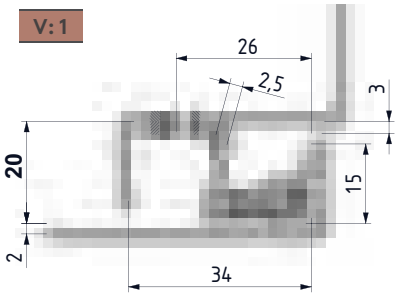

V: 2

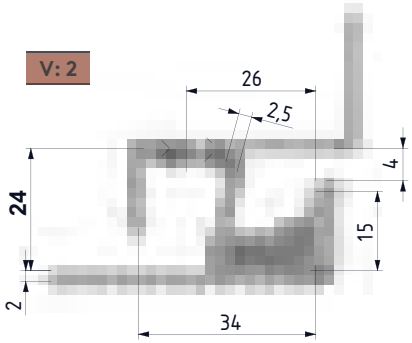



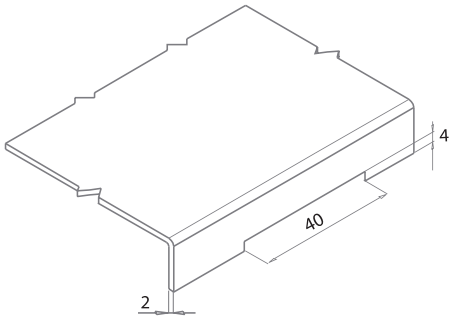

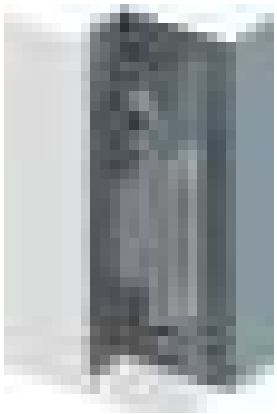

Hinge Rotation Angle



Note: Bolts are not supplied

For other materials please check: page 314

Group Code	Material	Finish	Version
295	4	0	V

tel | +90 212 721 44 44 fax | +90 212 721 44 45

295 CONCEALED HINGE

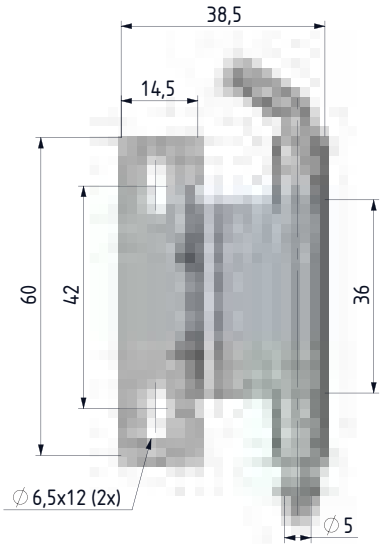

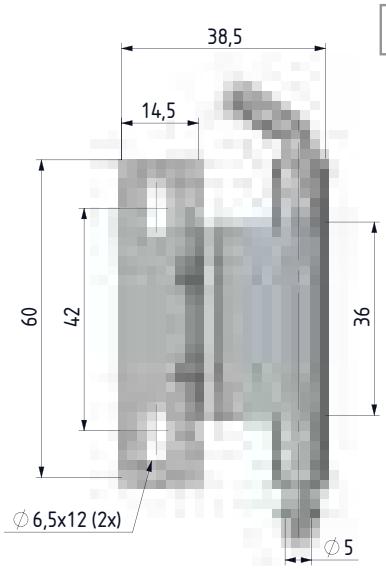

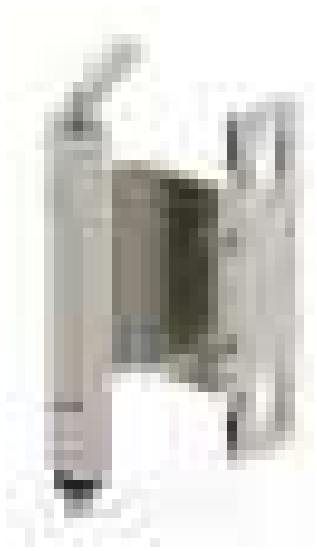

MATERIAL
BODY: Stainless Steel (AISI 304)
PIN: Stainless Steel (AISI 303)

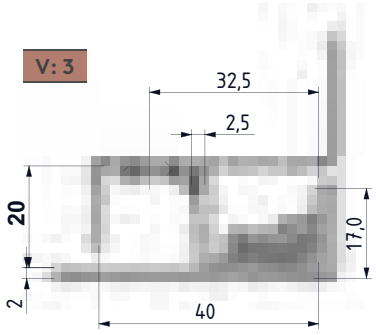

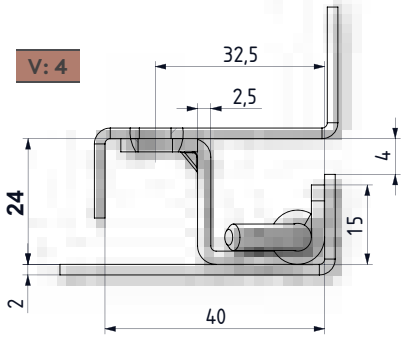





Group Code	Material	Finish	Version
295	4	0	V

Hinge Rotation Angle



Note: Bolts are not supplied

For other materials please check: page 315

CONCEALED HINGE

395

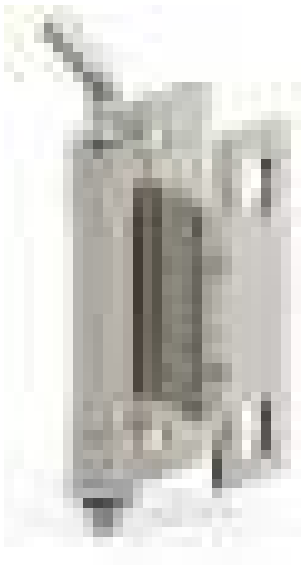

RoHS

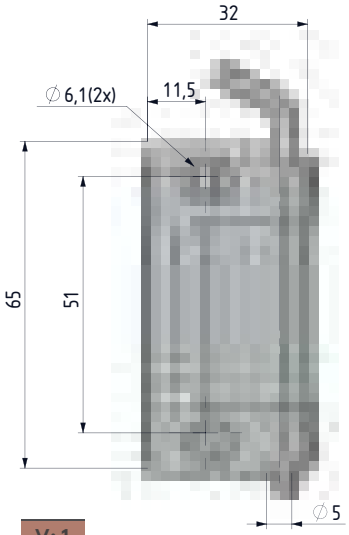

V: 1

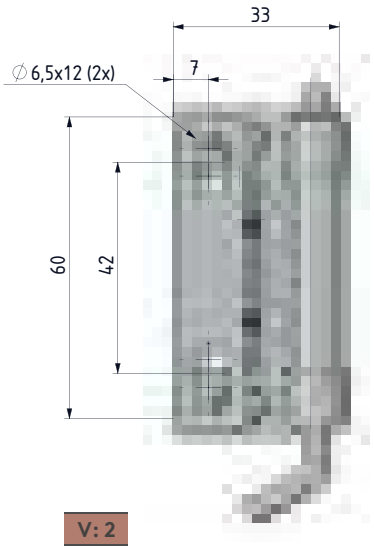

V: 2

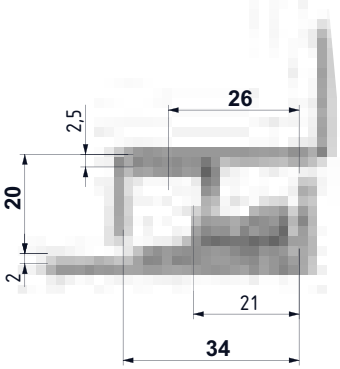

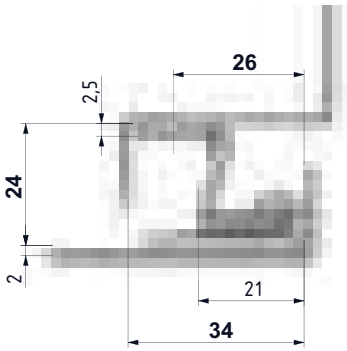

- For doors with a bend of between 20 mm and 24 mm
- Frame part screwed on, door part welded on
- Suitable for left- and right-hand applications

MATERIAL
BODY: Stainless Steel (AISI 304)
PIN: Stainless Steel (AISI 303)

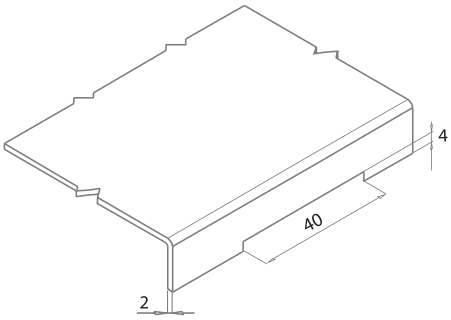



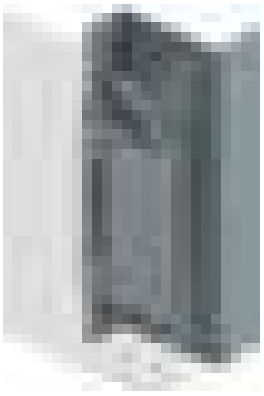

Hinge Rotation Angle



Note: Bolts are not supplied

For other materials please check: page 316

Group Code	Material	Finish	Version
395	4	0	V

tel | +90 212 721 44 44 fax | +90 212 721 44 45

395 CONCEALED HINGE

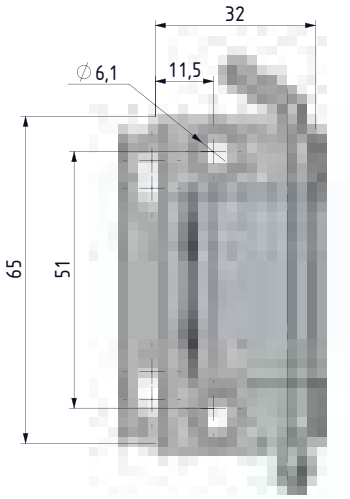

V: 3

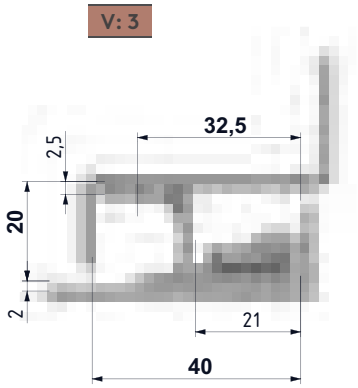

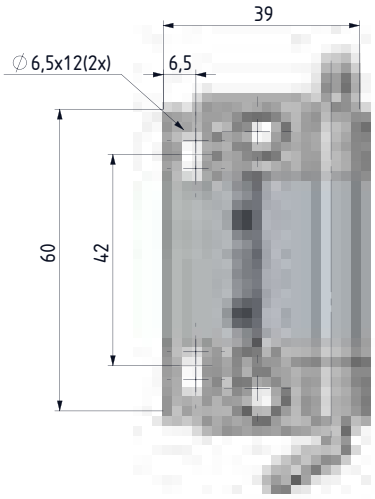

V: 4

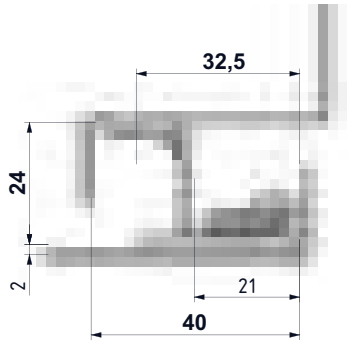





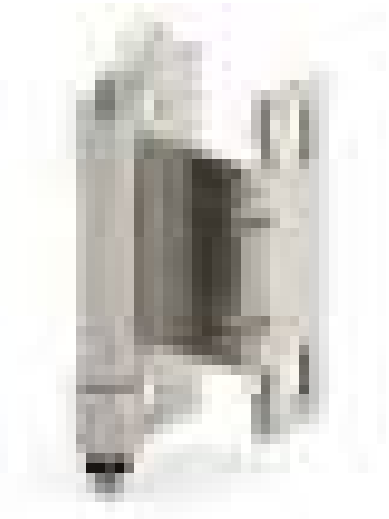

MATERIAL
BODY: Stainless Steel (AISI 304)
PIN: Stainless Steel (AISI 303)

Hinge Rotation Angle



Group Code	Material	Finish	Version
395	4	0	V

Note: Bolts are not supplied

For other materials please check: page 317

CONCEALED HINGE

695

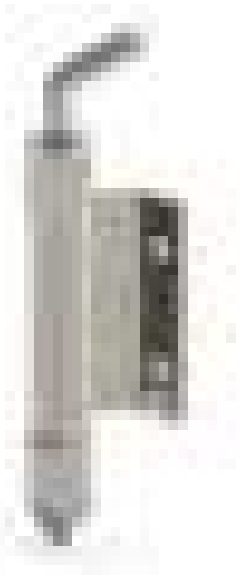

RoHS

V: 1

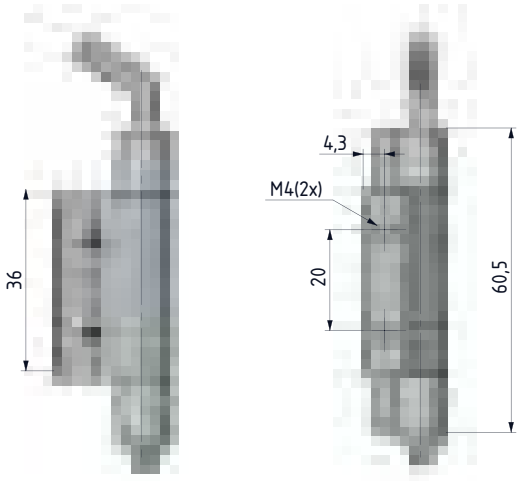

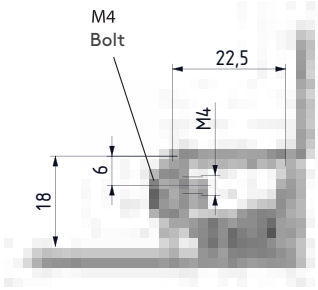

- For doors with a bend of 18 mm
- Frame part screwed on, door part either welded on or screwed-on
- Suitable for left- and right-hand application

MATERIAL

BODY: Stainless Steel (AISI 304)
PIN: Stainless Steel (AISI 303)

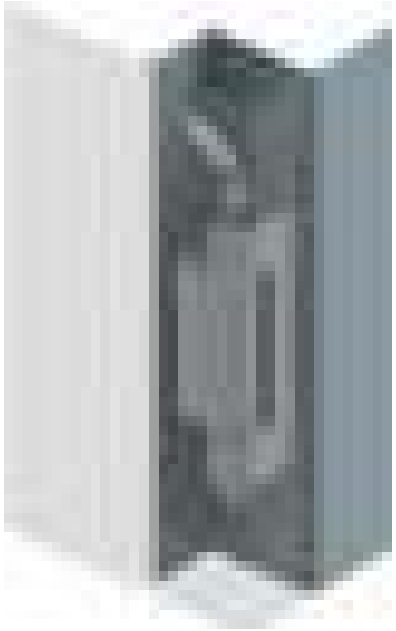

Hinge Rotation Angle



Note: Bolts are supplied

For other materials please check: page 318

Group Code	Material	Finish	Version
695	4	0	1

tel | +90 212 721 44 44 fax | +90 212 721 44 45

695 CONCEALED HINGE

V: 2

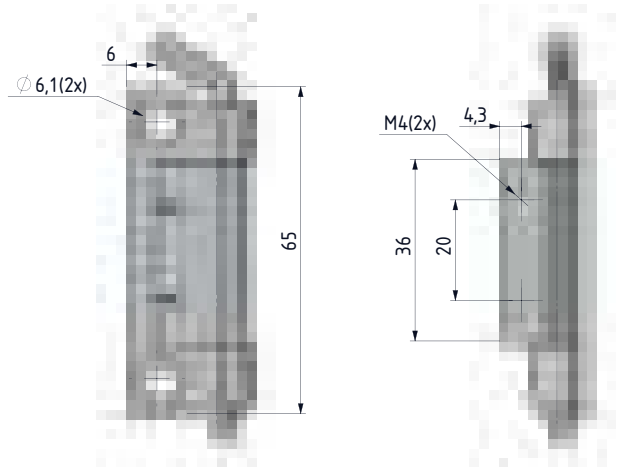

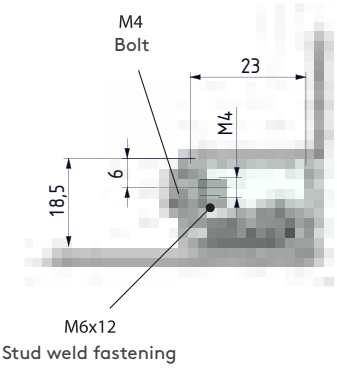

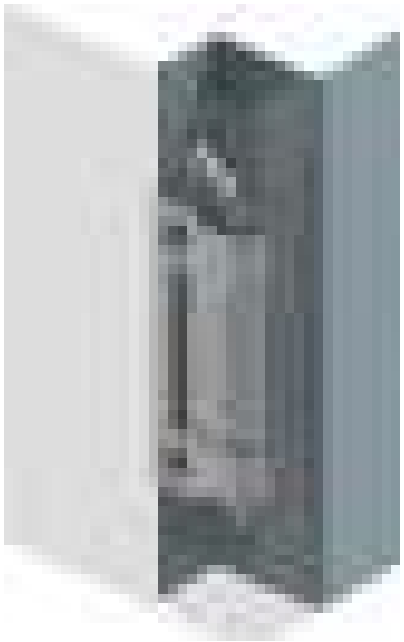

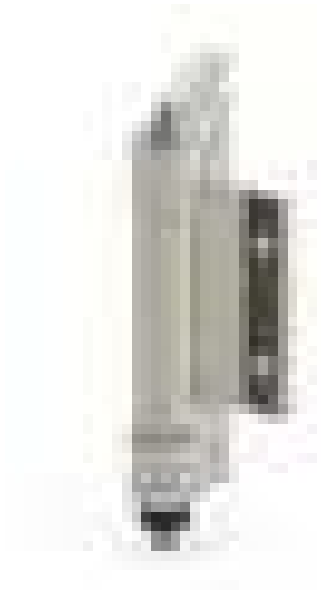

- For doors with a bend of 18.5 mm
- Frame part screwed on, door part mounted by nut to welded stud on door
- Suitable for left- and right-hand applications

MATERIAL
BODY: Stainless Steel (AISI 304)
PIN: Stainless Steel (AISI 303)

Hinge Rotation Angle



Group Code	Material	Finish	Version
695	4	0	2

Note: Bolts are supplied

For other materials please check: page 319

CONCEALED HINGE 795

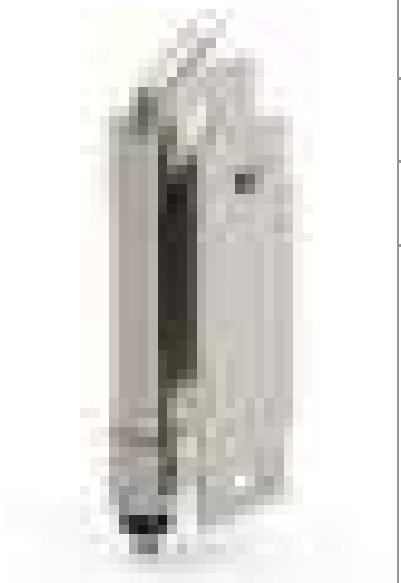

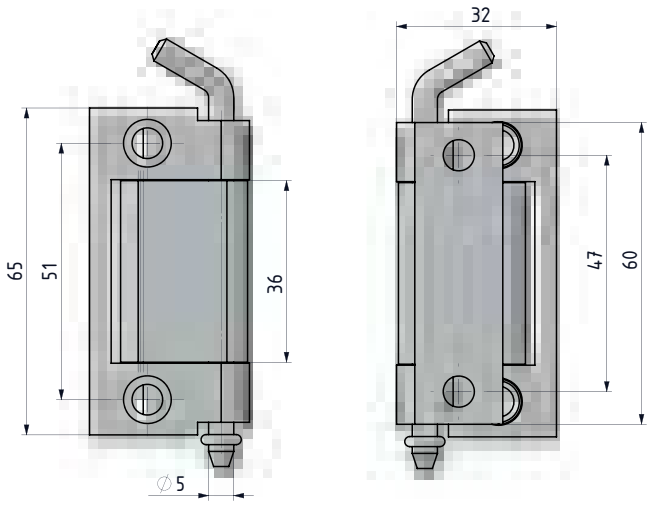

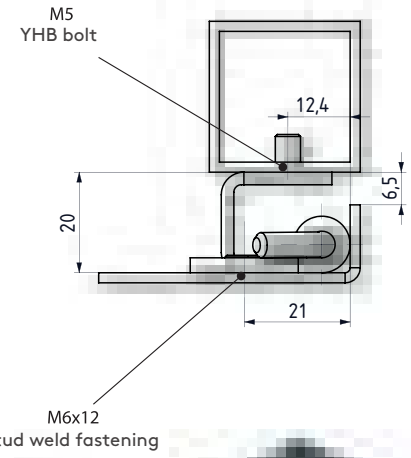



- For doors with a bend of 20 mm to fixed profiles
- Frame part screwed on, door part mounted by nut to welded stud on door
- Suitable for left- and right-hand applications

MATERIAL
BODY: Stainless Steel (AISI 304)
PIN: Stainless Steel (AISI 303)

Hinge Rotation Angle

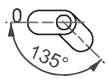

Note: Bolts are not supplied

For other materials please check: page 320

Group Code	Material	Finish
795	4	0

tel | +90 212 721 44 44 fax | +90 212 721 44 45

289 CONCEALED HINGE

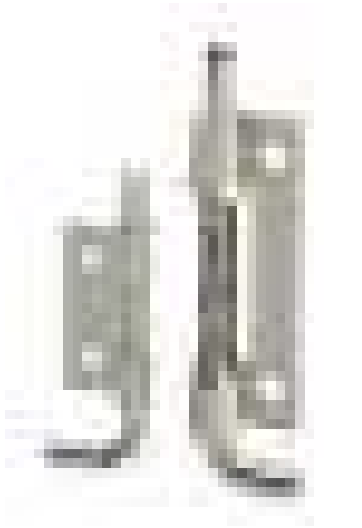

- For internally mounted doors
- Spring-loaded hinge for easy door removal
- Both versions either screwed or welded on
- Suitable for left- and right-hand applications

MATERIAL
BODY: Stainless Steel (AISI 304)
PIN: Stainless Steel (AISI 303)

V: 1

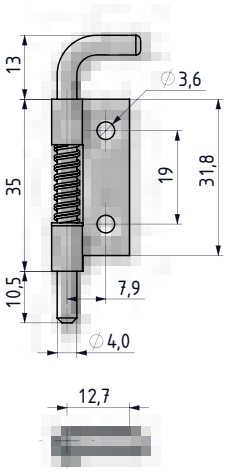

V: 2

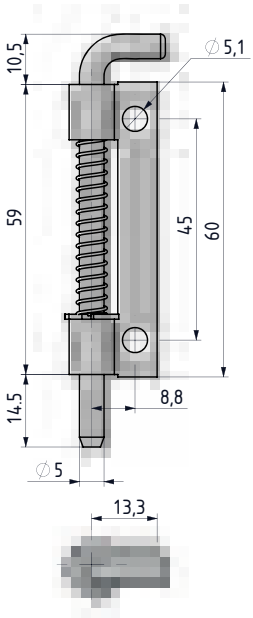

Hinge Rotation Angle

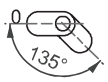

DOOR DIRECTION	
Right hand	001
Left hand	002

Group Code	Material	Finish	Version	Door Direction
289	4	0	V	

Note: Bolts are not supplied

Note: Assembled RH (as drawn)
Assembled LH
(mirror inverted)

For other materials please check: page 331

CONCEALED HINGE

1995

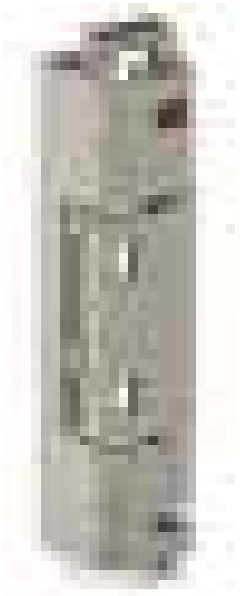

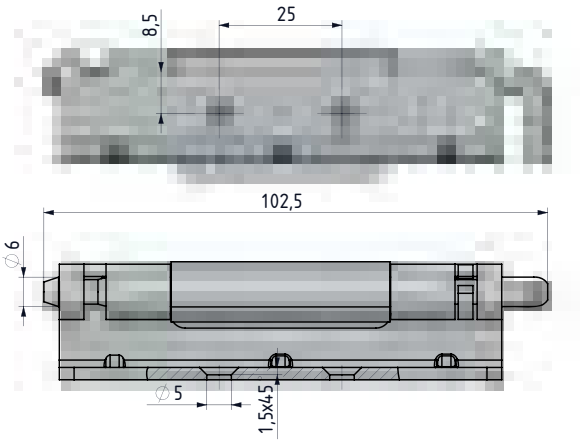

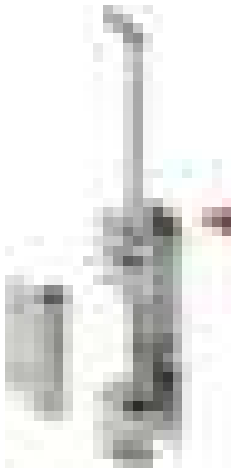

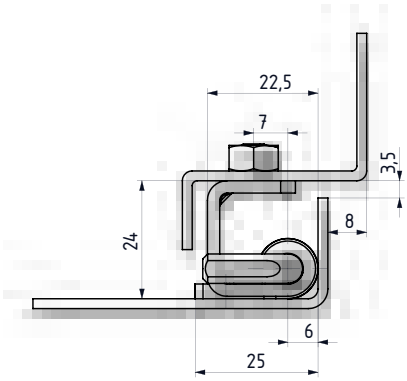

- Remove the door by just removing the pin
- Suitable for heavy-duty applications
- Suitable for 24 mm door bend cabinets

MATERIAL
BODY: Stainless Steel (AISI 304)
PIN: Stainless Steel (AISI 303)

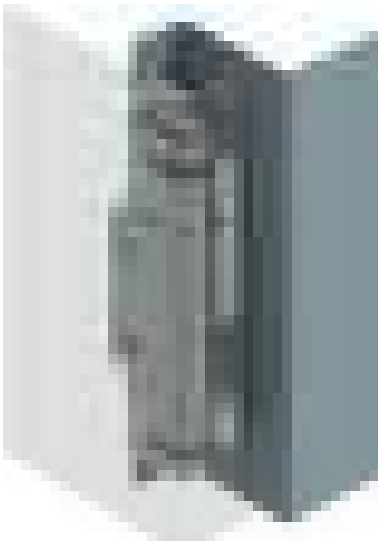

Middle Parts

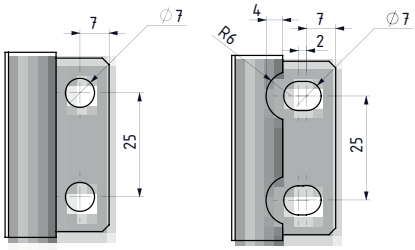

MP: 1 Circle Hole

MP: 2 Slot hole

For other materials please check: page 326

Note: Bolts are not supplied

Group Code	Material	Finish	Version	Middle Part	Option
1995	4	0	4	MP	0

OPTION	OP
Hole	0

tel | +90 212 721 44 44 fax | +90 212 721 44 45

995 CONCEALED HINGE

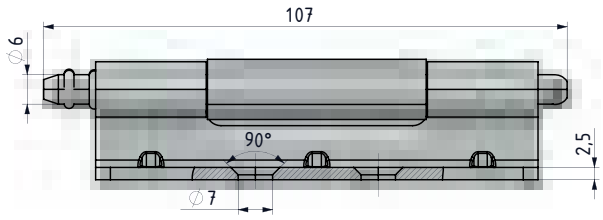

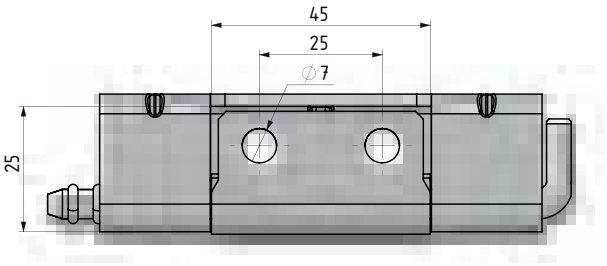

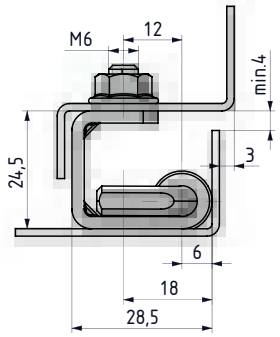



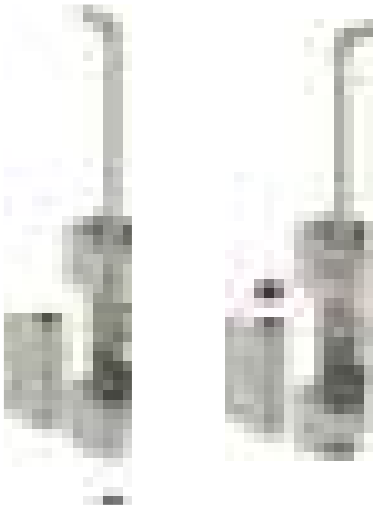

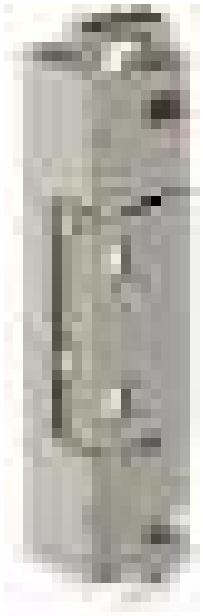

- Remove the door by just removing the pin
- Suitable for heavy-duty applications
- Suitable for 24.5 mm bend door cabinets

MATERIAL
BODY: Stainless Steel (AISI 304)
PIN: Stainless Steel (AISI 303)

Middle Parts

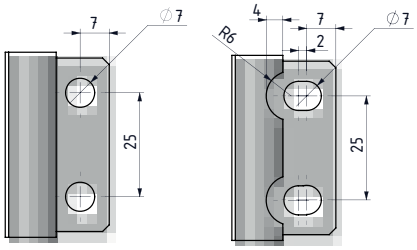

V:3 Fixed by O'ring

V:4 Fixed by clips

MP: 1 Circle Hole

MP: 2 Slot hole

Note: Bolts are not supplied

For other materials please check: page 324

Group Code	Material	Finish	Version	Middle Part	Option
995	4	0	V	MP	0

OPTION	OP
Hole	0

CONCEALED HINGE

095

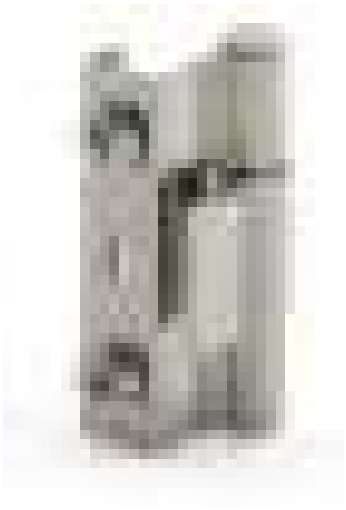

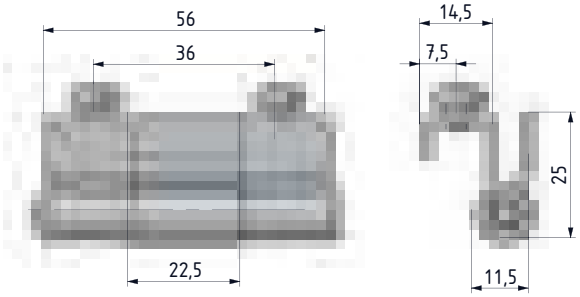

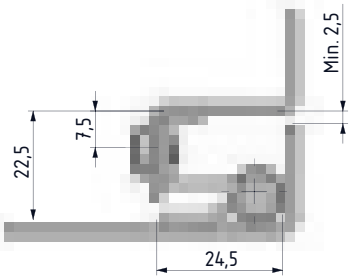

- For doors with a bend of 22.5 mm or more

MATERIAL
BODY: Stainless Steel (AISI 304)
PIN: Stainless Steel (AISI 303)

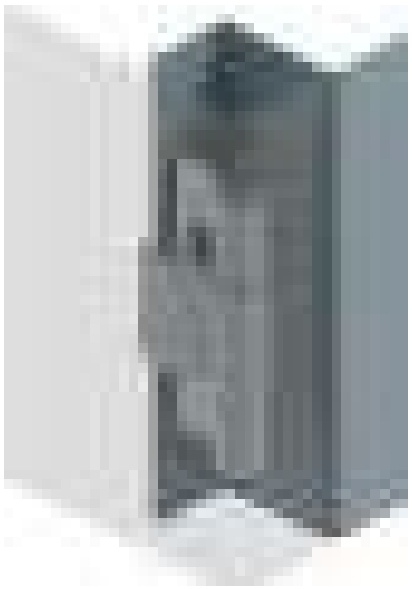

Hinge Rotation Angle



Group Code	Material	Finish	Version	Option
095	4	0	1	0

Note: Bolts are supplied

For other materials please check: page 310

tel | +90 212 721 44 44 fax | +90 212 721 44 45

097 CORNER HINGE

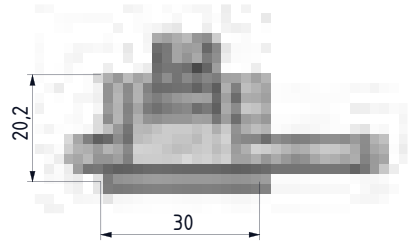

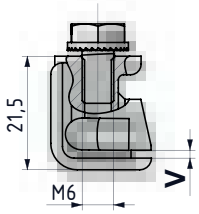

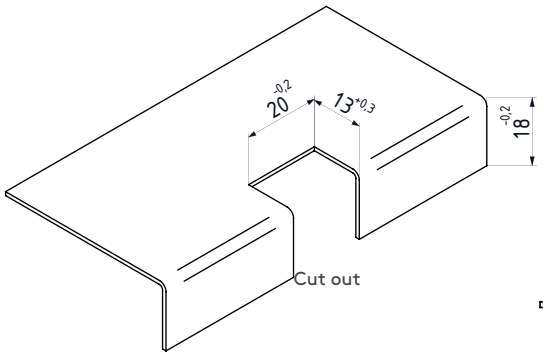

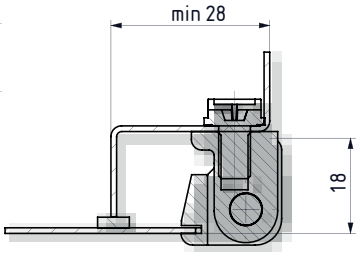

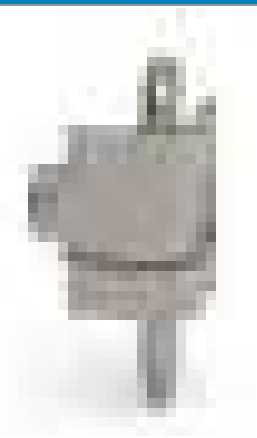

- Corner hinge
- Suitable for steel panels with a thickness of between 1.0 mm and 2.2 mm
- Hinge pin available in three types

MATERIAL
FIXED, MOVABLE PARTS: Stainless Steel
PIN: Stainless steel or Poliasetal (Delrin

V:15

1.0 mm - 1.2 mm door plate thickness
(097 M-F-P-15)

V:22

1.5 mm - 2 mm door plate thickness
(097 M-F-P-22)



Hinge Rotation Angle



P:1 **P:2** **P:3**

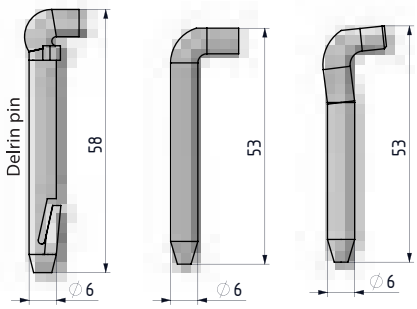

Group Code	Material	Finish	Pin	Version
097	4	0	P	V

For other materials please check: page 336

LIFT-OFF HINGE

4299

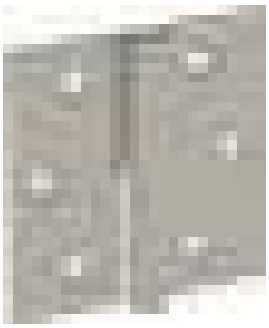

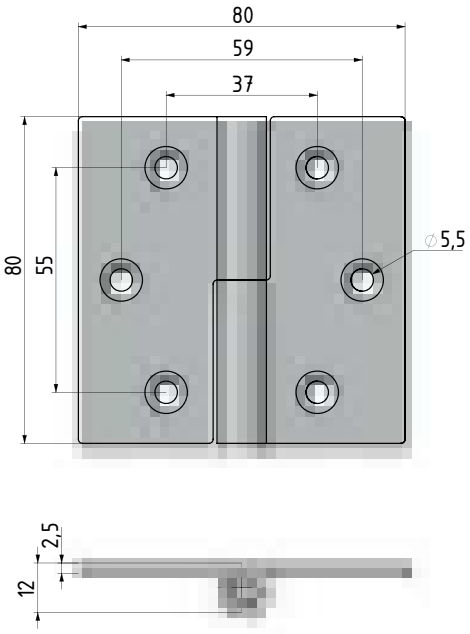

- Designed for plain/flush-mounted doors
- Suitable for left- and right-hand applications

MATERIAL
BODY: Stainless Steel (AISI 304)
PIN: Stainless Steel (AISI 303)



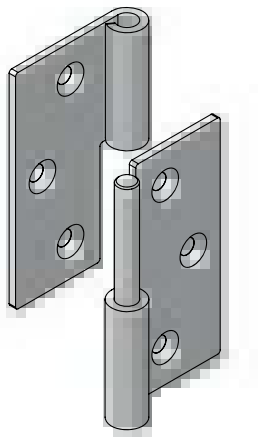

Hinge Rotation Angle



For other materials please check: page 372

Group Code	Material	Finish	Door Direction
4299	4	0	

DOOR DIRECTION	
Right hand	001
Left hand	002

tel | +90 212 721 44 44 fax | +90 212 721 44 45

3599 LIFT-OFF HINGE

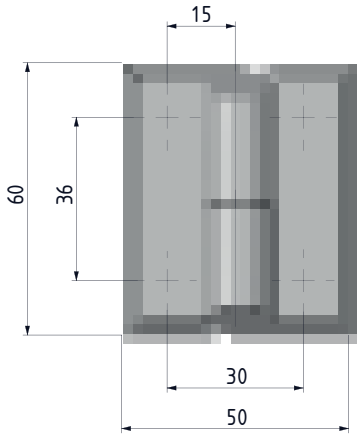

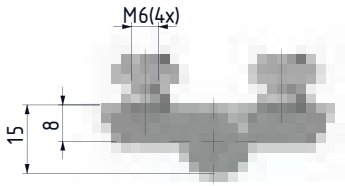

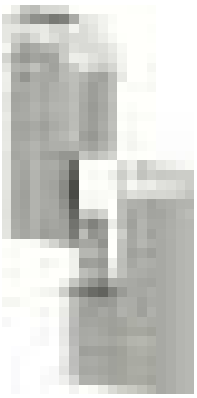

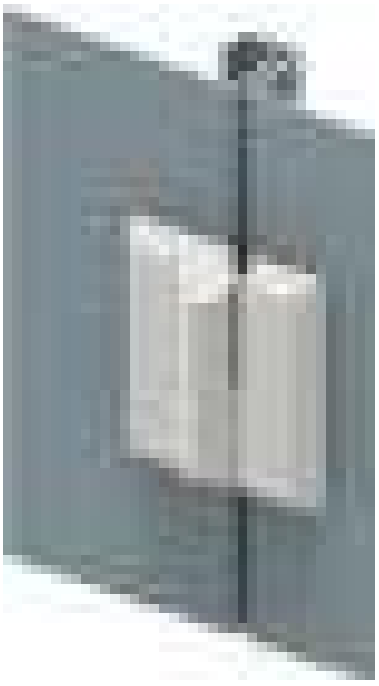



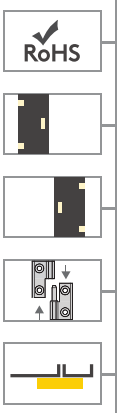

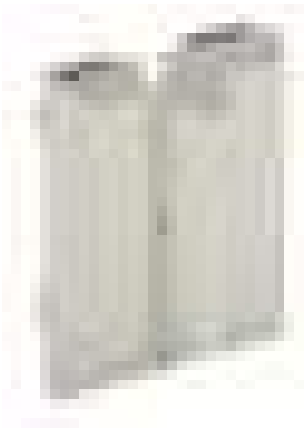

- Concealed mounting screws prevent external access to hinge
- Designed for plain/flush-mounted doors
- Suitable for left- and right-hand applications

MATERIAL
BODY: Stainless Steel (AISI 316)
PIN: Stainless Steel (AISI 303)

Hinge Rotation Angle



Group Code	Material	Finish	Door Direction
3599	4	0	

DOOR DIRECTION	
Right hand	001
Left hand	002

LIFT-OFF HINGE 1293

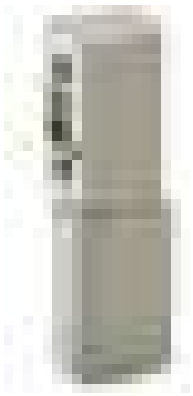

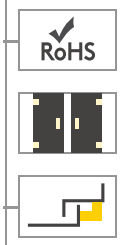

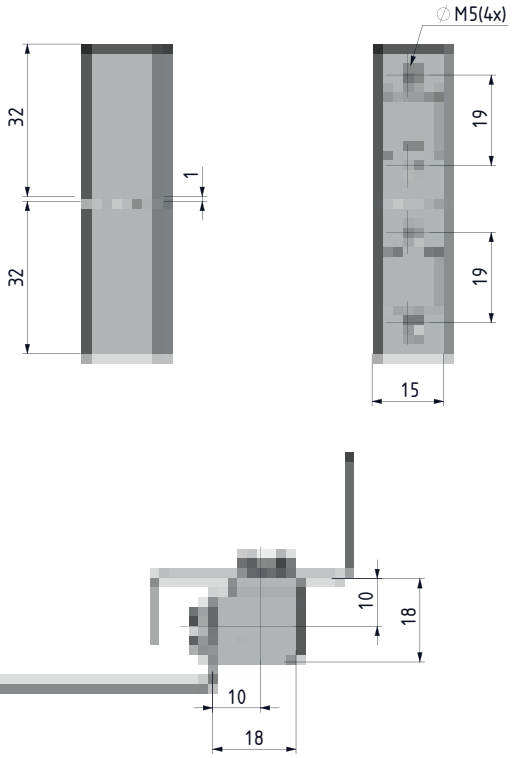

- Lift-off hinge
- Suitable for left- and right-hand applications
- Maximum hinge rotation 180°

MATERIAL
BODY: Stainless Steel (AISI 304)
PIN: Stainless Steel (AISI 303)

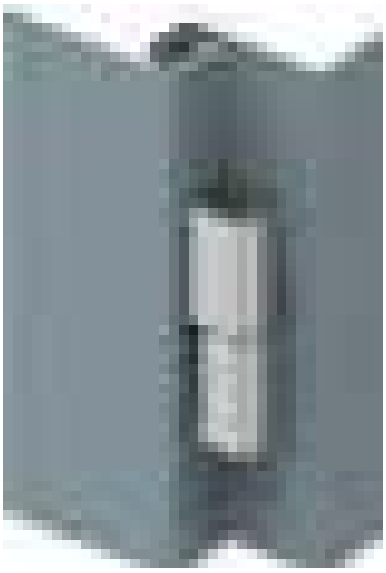



Note: Bolts are supplied

Group Code	Material	Finish	Door Direction
1293	4	0	

DOOR DIRECTION	
Right hand	001
Left hand	002

tel | +90 212 721 44 44 fax | +90 212 721 44 45

1393 LIFT-OFF HINGE

NEW

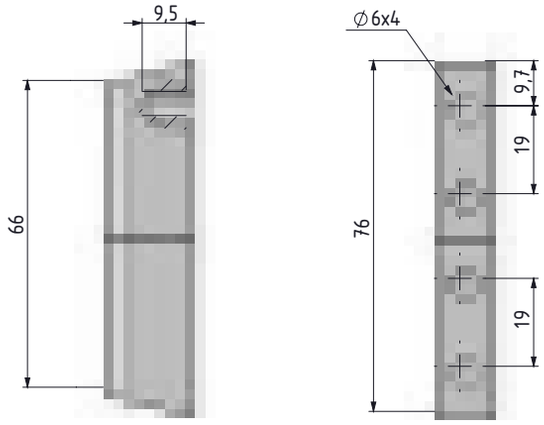

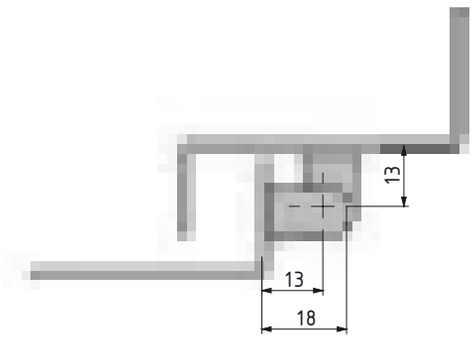

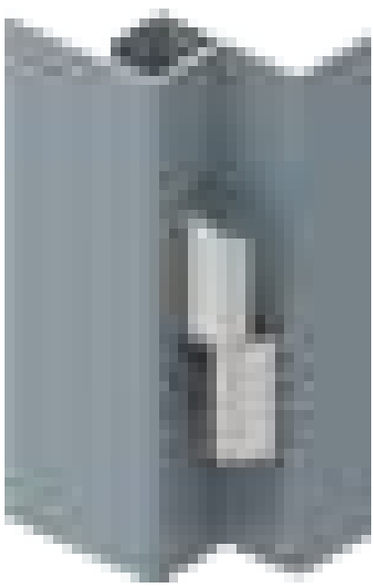

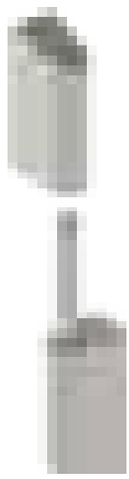

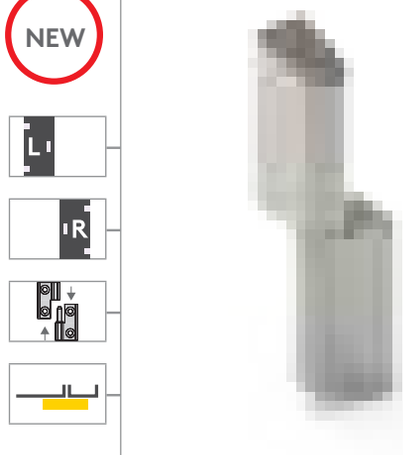

- Lift-off hinge
- Suitable for left- and right-hand applications
- Maximum hinge rotation 180°w

MATERIAL
BODY: Stainless Steel (AISI 304)
PIN: Stainless Steel (AISI 303)

Group Code	Material	Finish	Door Direction
1393	4	0	

DOOR DIRECTION	
Right hand	001
Left hand	002

MINI LEAF HINGE

1299

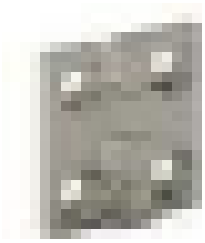

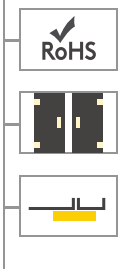

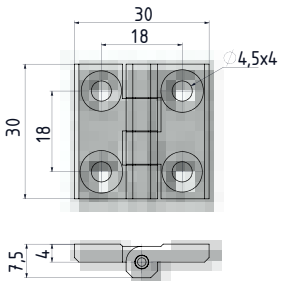

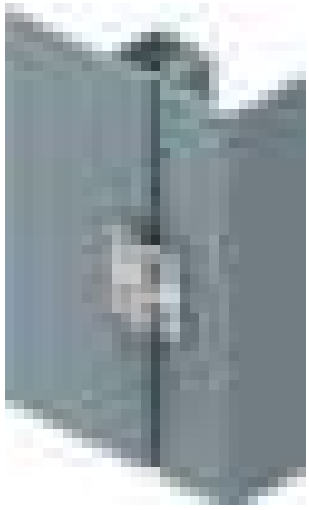

- Generally used for plain/small flush mounted doors.

MATERIAL
Stainless Steel (AISI 316)

Group Code	Material	Finish
1299	4	0

FLAT HINGE

600

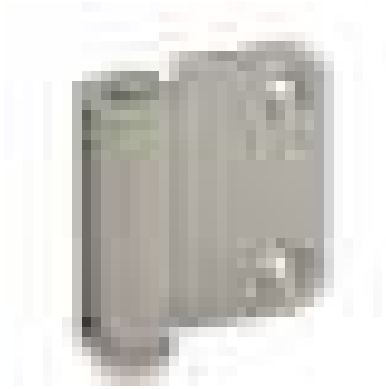

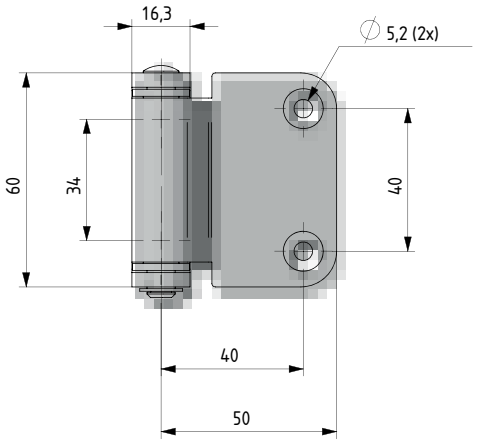

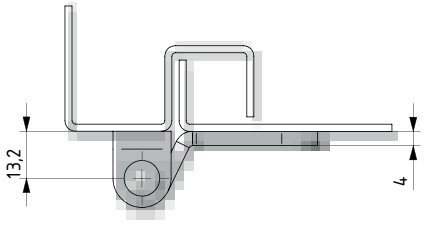



- Designed for plain/flush-mounted doors.

MATERIAL
BODY: Stainless Steel (AISI 316)
PIN: Stainless Steel (AISI 303)

Hinge Rotation Angle



Group Code	Material	Finish	Height	Version
600	4	0	00	3

tel | +90 212 721 44 44 fax | +90 212 721 44 45

LIFT-OFF HINGE

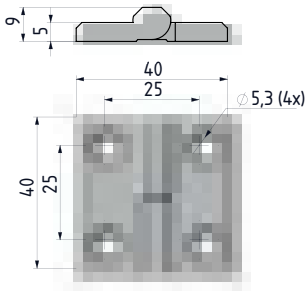

GROUP CODE: **3299**

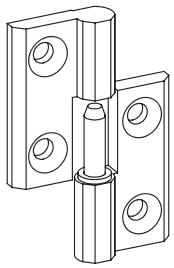

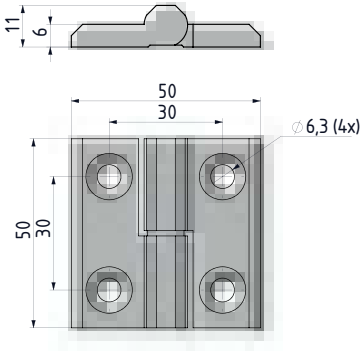

GROUP CODE: **3099**

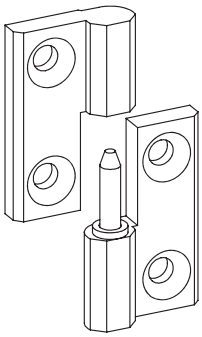

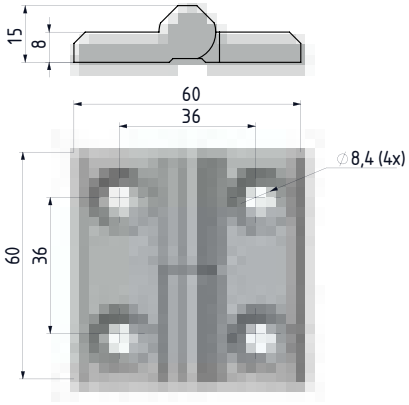

GROUP CODE: **3399**

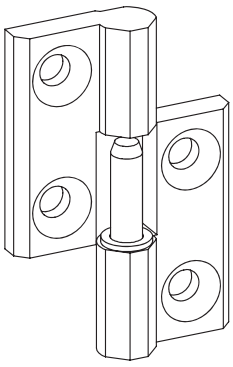

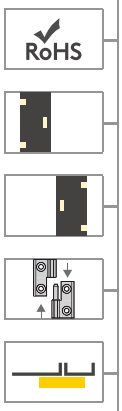

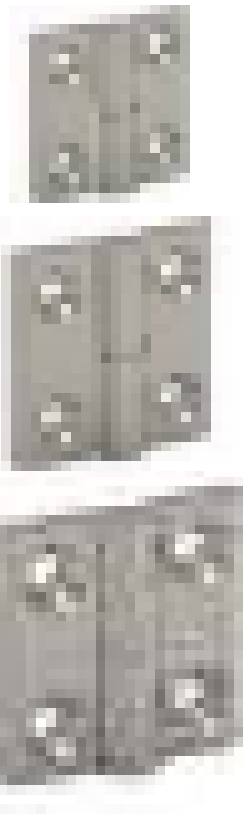

- Lift off hinge
- Suitable for left- and right-hand applications
- Opening angle 270°

MATERIAL
Stainless Steel (AISI 316)

Hinge Rotation Angle



Group Code	Material	Finish	Version	Door Direction
	4	0	1	

DOOR DIRECTION	
Right hand	001
Left hand	002

LEAF HINGE

299

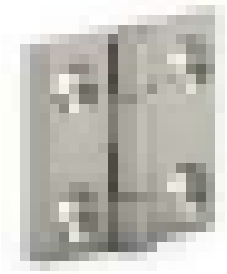

RoHS

V: 3

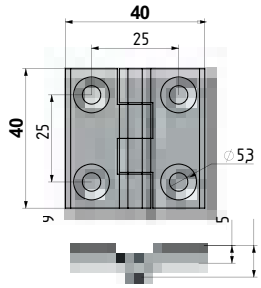

Group Code	Material	Finish	Version
299	4	0	3

- Generally used for plain/flush mounted doors

MATERIAL
Stainless Steel (AISI 316)

LEAF HINGE

099

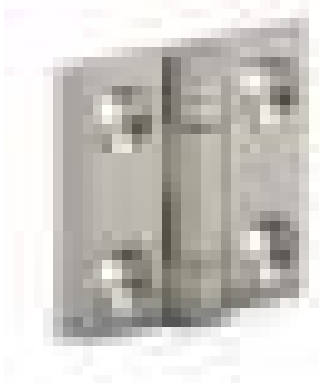

RoHS

V: 4

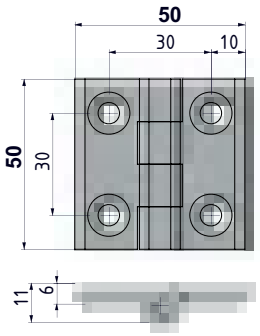

V: 7

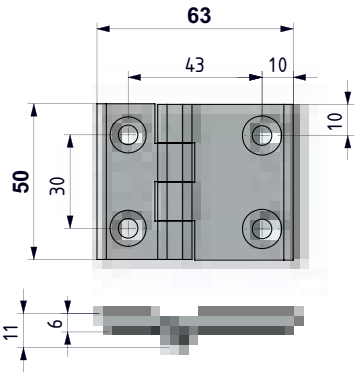

V:10

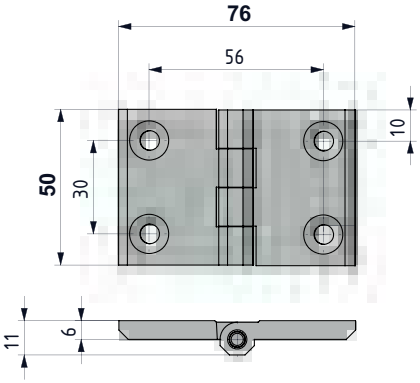

Group Code	Material	Finish	Version
099	4	0	V

- Generally used for plain/flush mounted doors

MATERIAL
Stainless Steel (AISI 316)

For other materials please check:
page 358-359

tel | +90 212 721 44 44 fax | +90 212 721 44 45

399 LEAF HINGE

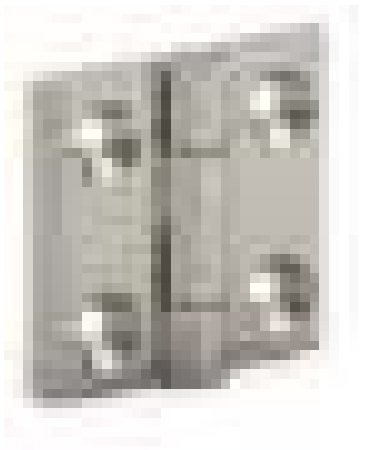

- Generally used for plain / flush-mounted, isolated heavy doors
- Available in three sizes, hole fixing:
  - 60 mm x 60 mm
  - 60 mm x 90 mm
  - 60 mm x 120 mm

MATERIAL
Stainless Steel (AISI 316)

V: 4

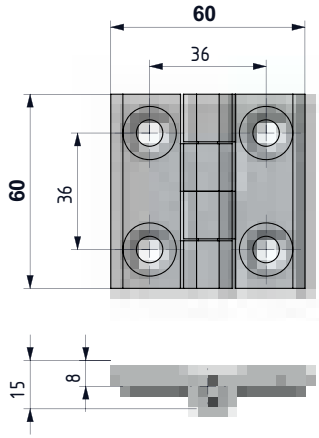

V: 5

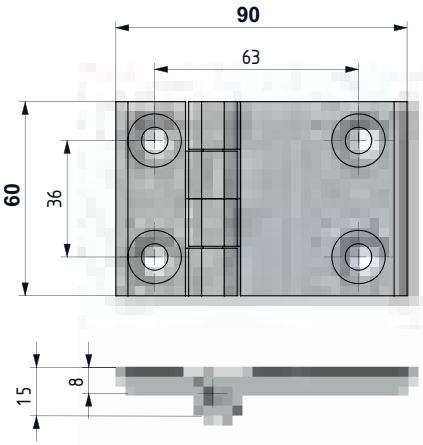

V: 6

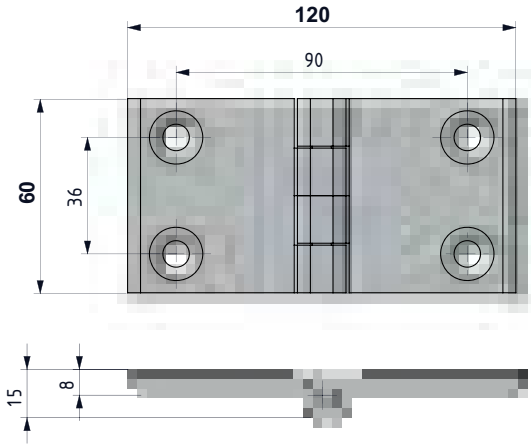

Group Code	Material	Finish	Version
399	4	0	V

For other materials please check: page 360

LEAF HINGE

099



- Generally used for plain/flush mounted doors
- Stud versions fitted with M6 x 12 mm threaded stud

MATERIAL
Stainless Steel (AISI 316)

V: 1

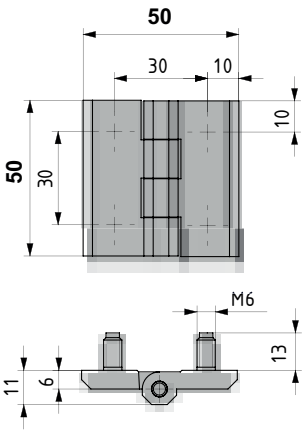

V: 8

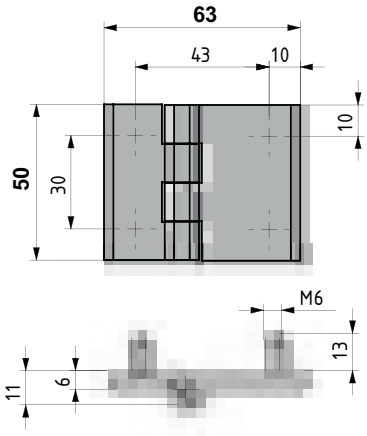

V: 9

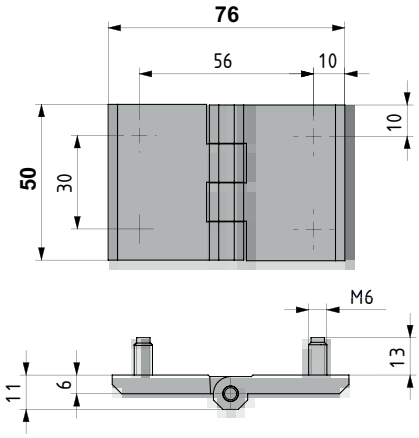

Group Code	Material	Finish	Version
099	4	0	V

For other materials please check: page 362

tel | +90 212 721 44 44 fax | +90 212 721 44 45

399 LEAF HINGE

RoHS



- Generally used for plain/flush-mounted, isolated heavy doors
- Available in three sizes, stud fixing:
  - 60 mm x 60 mm
  - 60 mm x 90 mm
  - 60 mm x 120 mm
- Stud versions fitted with M8 x 14 mm threaded stud

MATERIAL
Stainless Steel (AISI 316)

V: 1

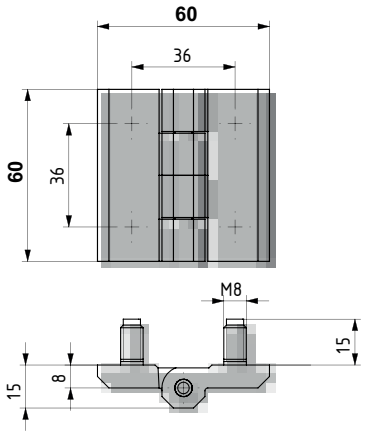

V: 2

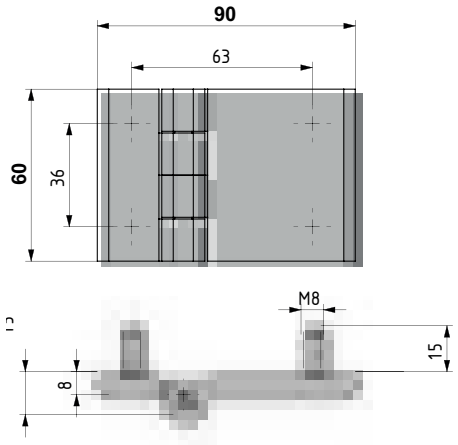

V: 3

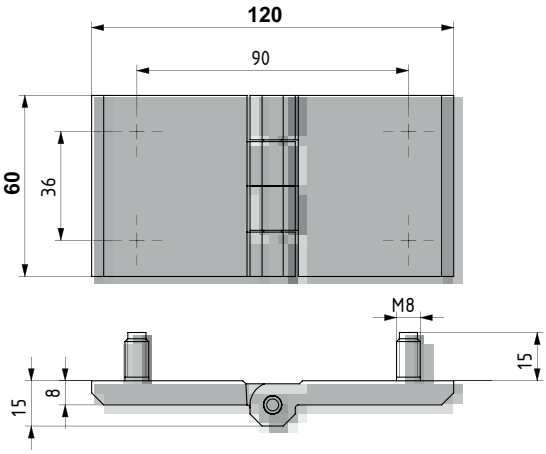

Group Code	Material	Finish	Version
399	4	0	V

For other materials please check: page 365

LEAF HINGE

599



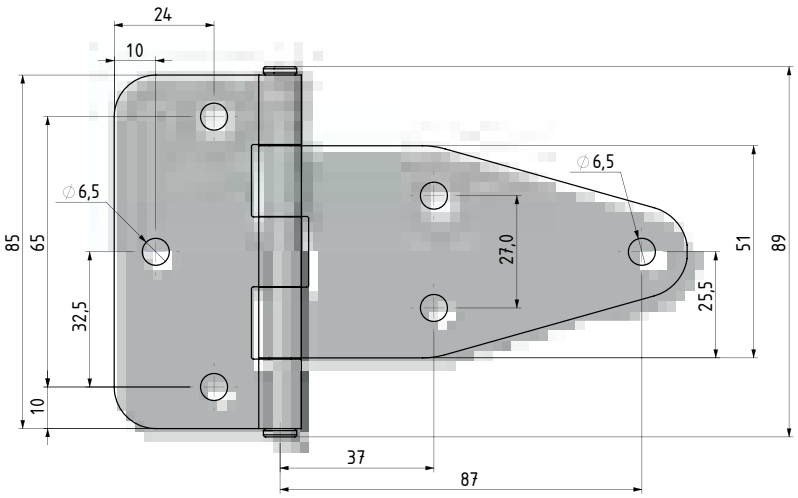

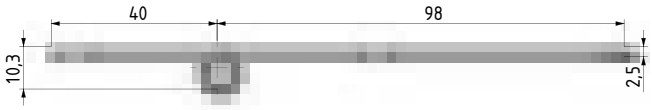

- Generally used for plain/flush-mounted, isolated, heavy doors
- Both parts attached by screws or nuts and bolts
- Hinge Rotation angle 180°

MATERIAL
BODY: Stainless Steel (AISI 304)
PIN: Stainless Steel (AISI 303)



Hinge Rotation Angle



Group Code	Material	Finish
599	4	0

For other materials please check: page 367

tel | +90 212 721 44 44 fax | +90 212 721 44 45

799 LEAF HINGE

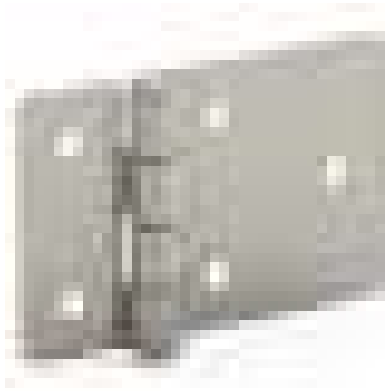

- Generally used for plain/flush-mounted, isolated, heavy doors

MATERIAL
BODY: Stainless Steel (AISI 304)
PIN: Stainless Steel (AISI 303)

V: 1

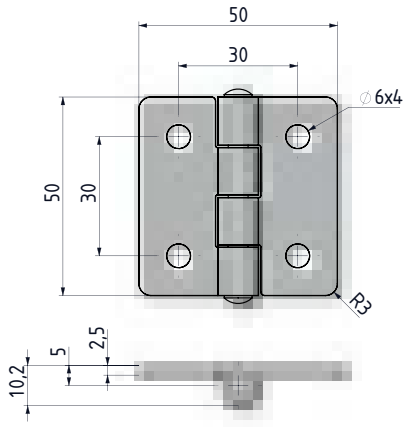

V: 2

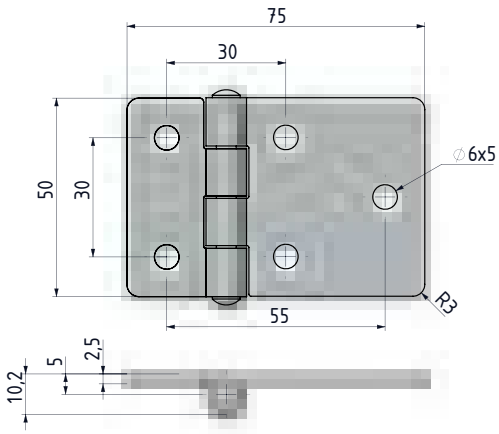

V: 3

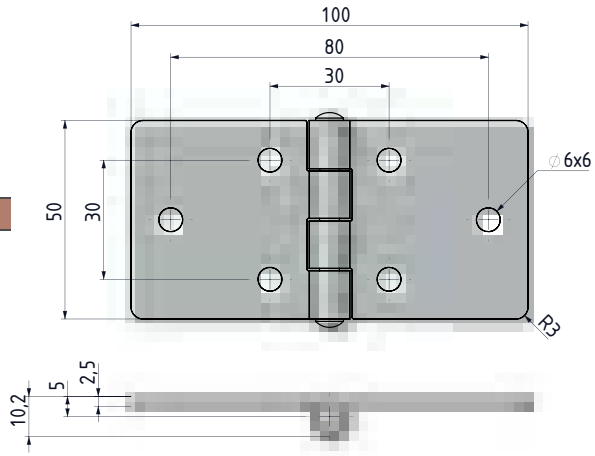

Hinge Rotation Angle



Group Code	Material	Finish	Version
799	4	0	V

For other materials please check: page 370

LEAF HINGE

1599

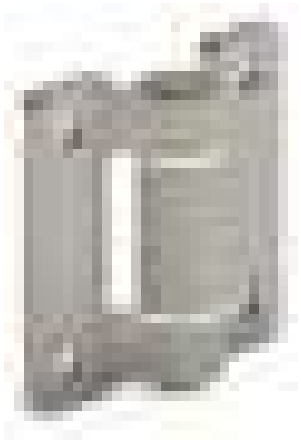

- Generally, used for plain/flush mounted, isolated, heavy doors.
- Both parts are attached by screws or nuts and bolts
- Hinge Rotation angle is 180°

MATERIAL

BODY: Stainless steel (AISI 304)
PIN: Stainless steel (AISI 303)

For other materials please check: page 368

Hinge Rotation Angle



V: 1

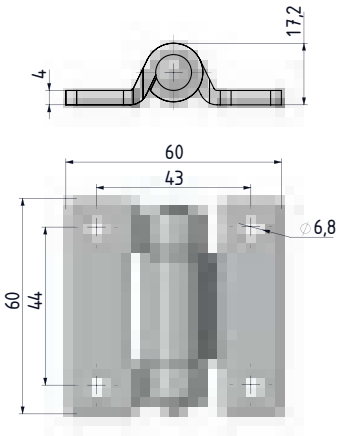

V: 2

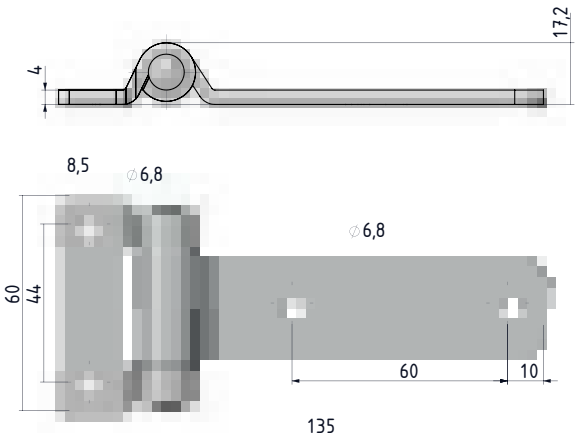

V: 3

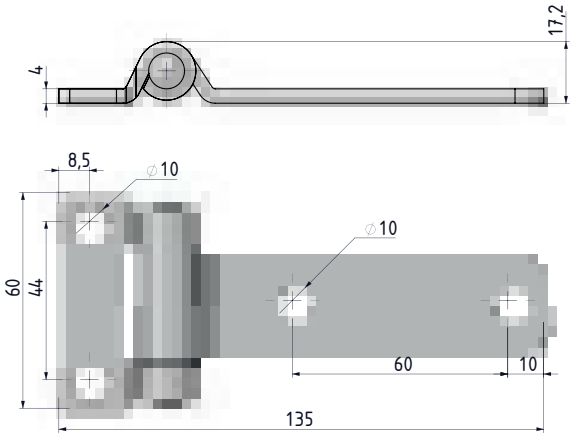

Group Code	Material	Finish	Version
1599	4	0	V

Note: Bolts are not supplied

tel | +90 212 721 44 44 fax | +90 212 721 44 45

1599 LEAF HINGE



- Generally, used for plain / flush mounted, isolated, heavy doors.
- Both parts are attached by screws or nuts and bolts
- Hinge Rotation angle is 180°

MATERIAL

BODY: Stainless steel (AISI 304)
PIN: Stainless steel (AISI 303)

V: 4

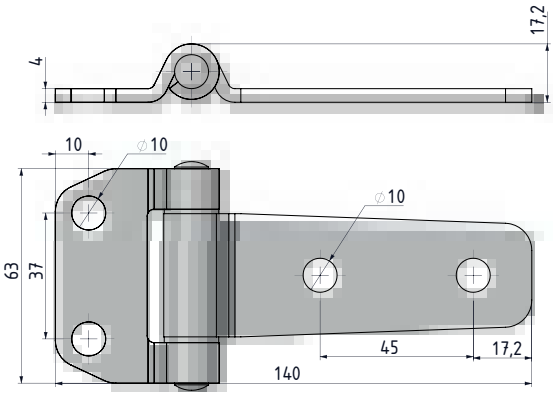

V: 5

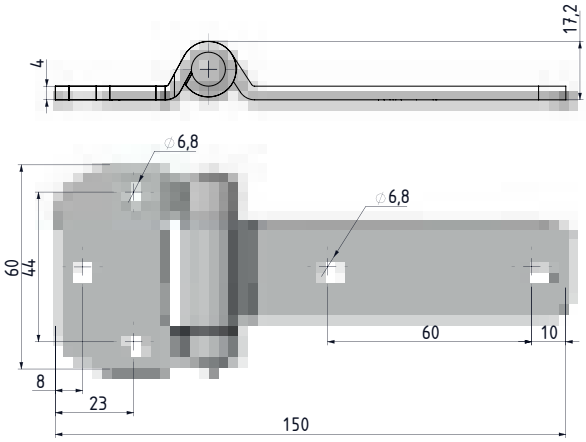

V: 6

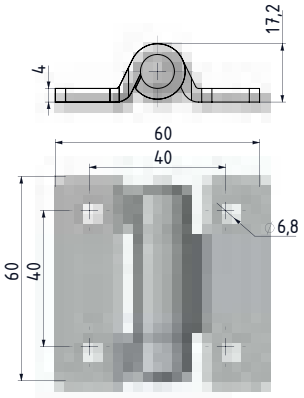

For other materials please check:
page 369

Group Code	Material	Finish	Version
1599	4	0	V

Hinge Rotation Angle

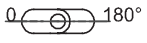

Note: Bolts are not supplied

LEAF HINGE (Lift-off) 899

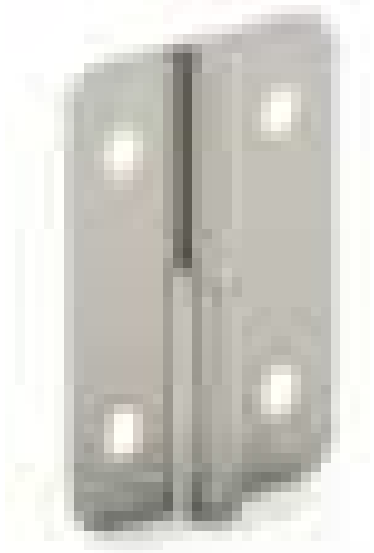

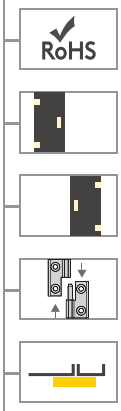

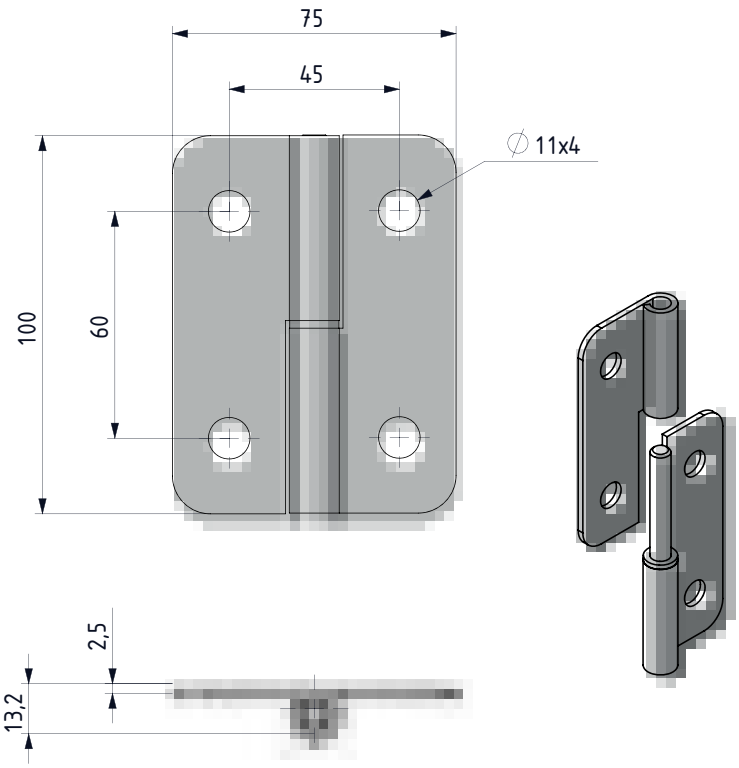

- Heavy-duty, lift-off hinge, corrosion resistant
- Suitable for left- and right-hand applications
- Opening angle 180°

MATERIAL
BODY: Stainless Steel (AISI 304)
PIN: Stainless Steel (AISI 303)

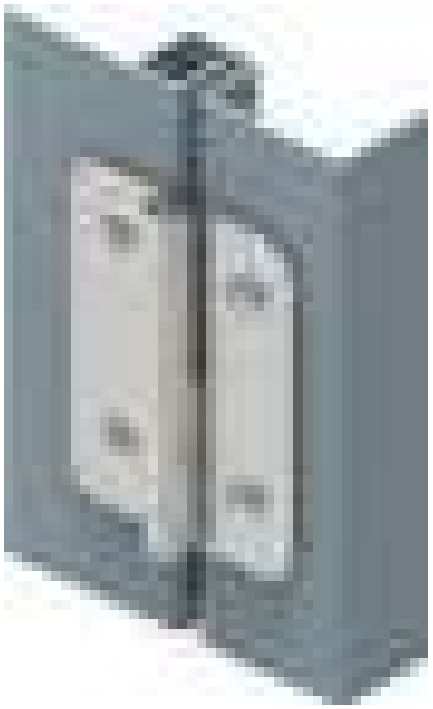

For other materials please check: page 365

Hinge Rotation Angle



Note: Bolts are not supplied

FINISH	F
No finish	0
Black coated	2

DOOR DIRECTION	
Right hand	001
Left hand	002

Group Code	Material	Finish	Door Direction
899	4	F	

tel | +90 212 721 44 44 fax | +90 212 721 44 45

999 LEAF HINGE

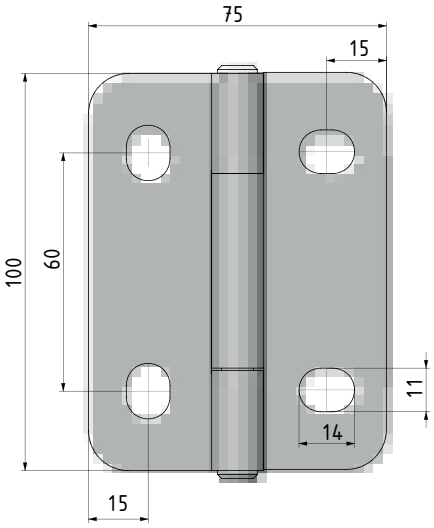





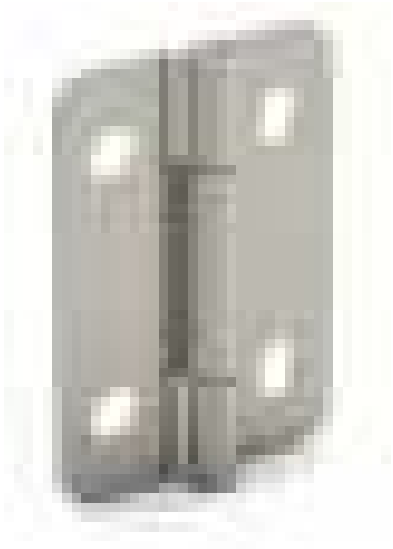

- Generally used for plain/ flush-mounted doors
- Suitable for outdoor applications
- Opening angle 270°
- Body made of stainless steel

MATERIAL
BODY: Stainless Steel (AISI 304)
PIN: Stainless Steel (AISI 303)

Group Code	Material	Finish
999	4	F

FINISH	F
No finish	0
Black coated	2

Hinge Rotation Angle



Note: Bolts are not supplied

LEAF HINGE

2999

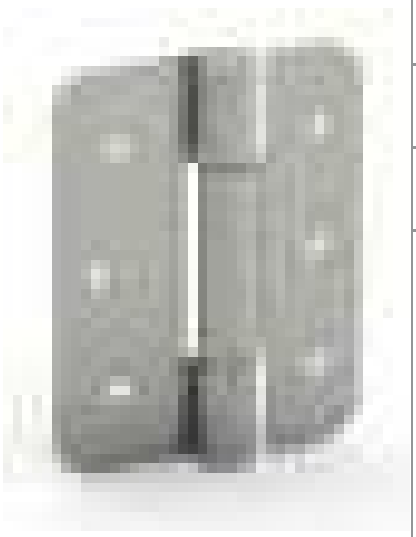

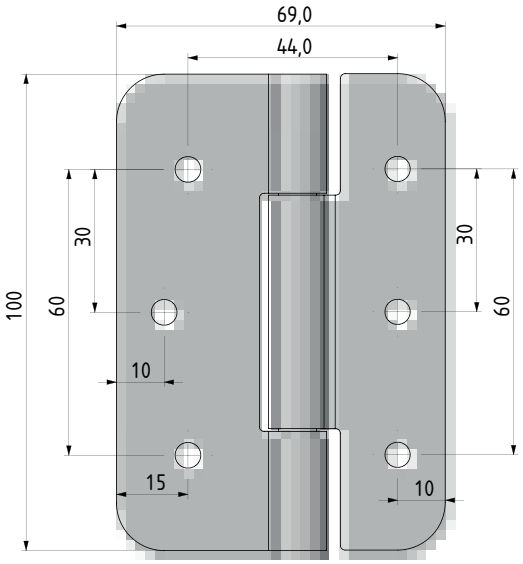

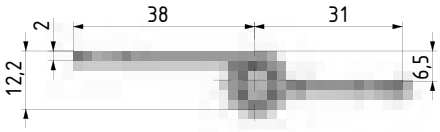

- Generally used for plain/ flush-mounted, isolated, heavy doors

MATERIAL
BODY: Stainless Steel (AISI 304)
PIN: Stainless Steel (AISI 303)

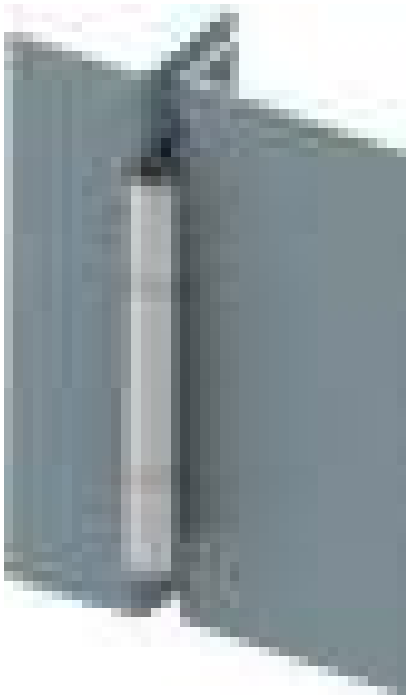

Hinge Rotation Angle



Note: Bolts are not supplied

Group Code	Material	Finish
2999	4	0

tel | +90 212 721 44 44 fax | +90 212 721 44 45

2890 CONCEALED HINGE

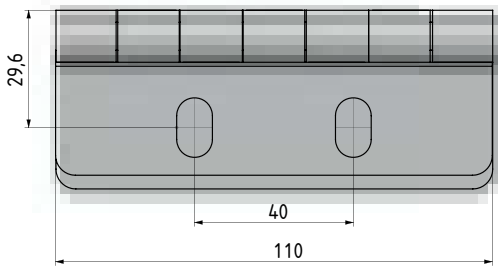

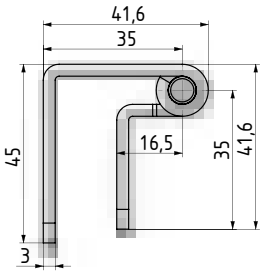

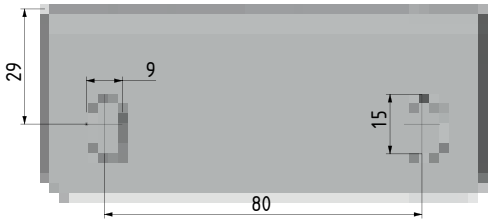

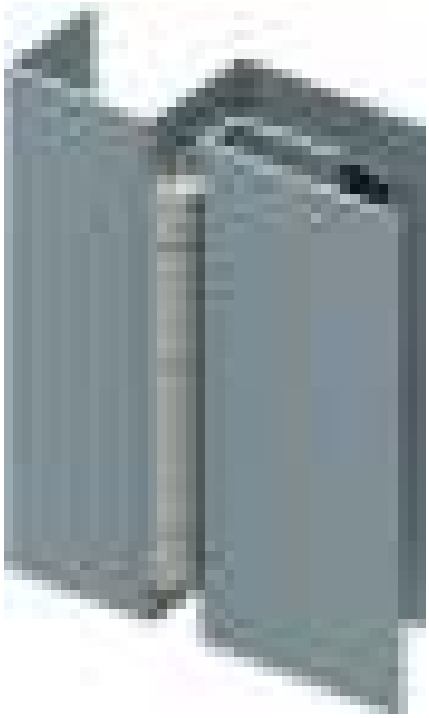



- Suitable for outdoor applications
- Heavy-duty hinge

MATERIAL
BODY: Stainless Steel (AISI 304)
PIN: Stainless Steel (AISI 303)

Group Code	Material	Finish
2890	4	0

SIDE HINGE (10 mm) — 090

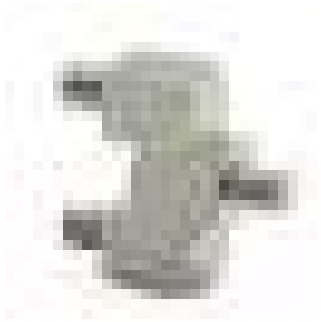

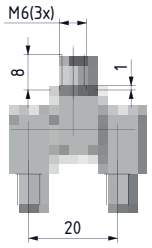

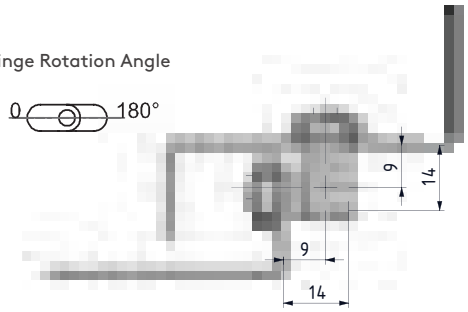

- Side mounted hinge
- Three 10 mm Stainless steel parts supplied separately
- For different dimensions contact Essentra

Group Code	Material	Finish
090	4	0

MATERIAL
Stainless Steel (AISI 303/304)

SIDE HINGE (12 mm) — 092

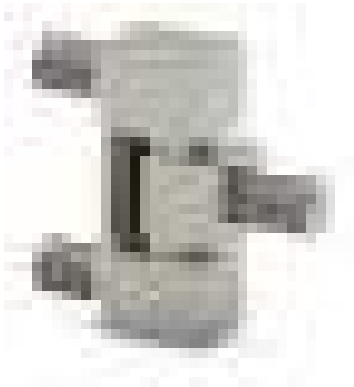

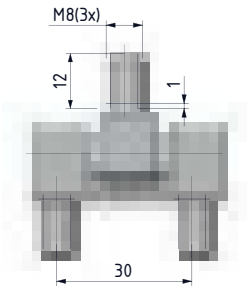

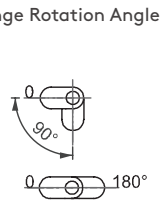

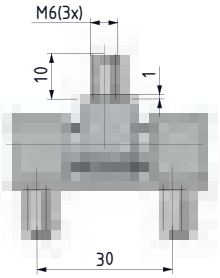

M8 → 092 M-F- 8-90°
092 M-F -8-180°

M6 → 092 M-F- 6-90°
092 M-F- 6-180°

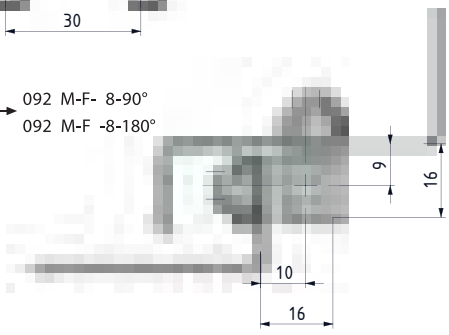

- Side mounted hinge
- 12 mm parts and stainless steel bearings
- Parts are assembled by fixing plate
- For different dimensions, please contact Essentra
- 90° and 180° angle versions are available

MATERIAL
Stainless Steel (AISI 303/304)

Group Code	Material	Finish
092	4	0

For other materials please check: page 288

tel | +90 212 721 44 44 fax | +90 212 721 44 45

192 SIDE HINGE (12 mm)

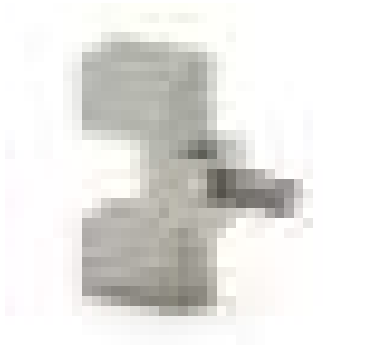

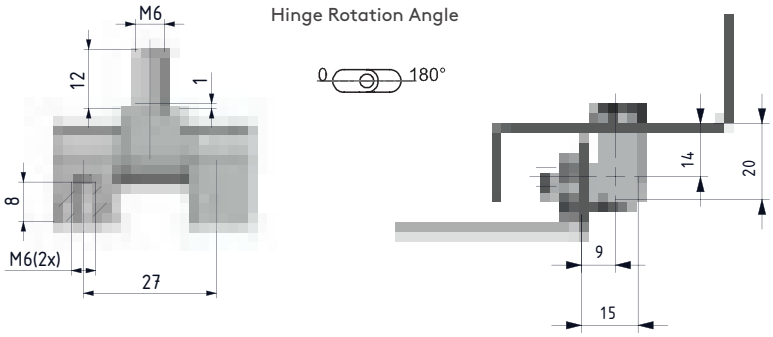

Group Code	Material	Finish
192	4	0

- Side-mounted hinge
- 12 mm parts and bearings made of stainless steel
- Parts are tightly fitted

MATERIAL
Stainless Steel (AISI 303/304)

193 SIDE HINGE (16 mm)

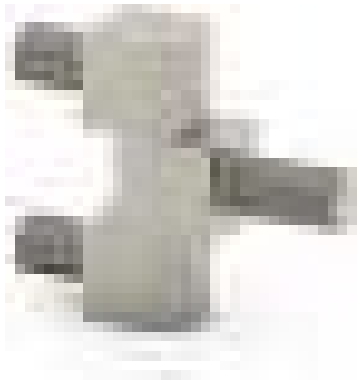

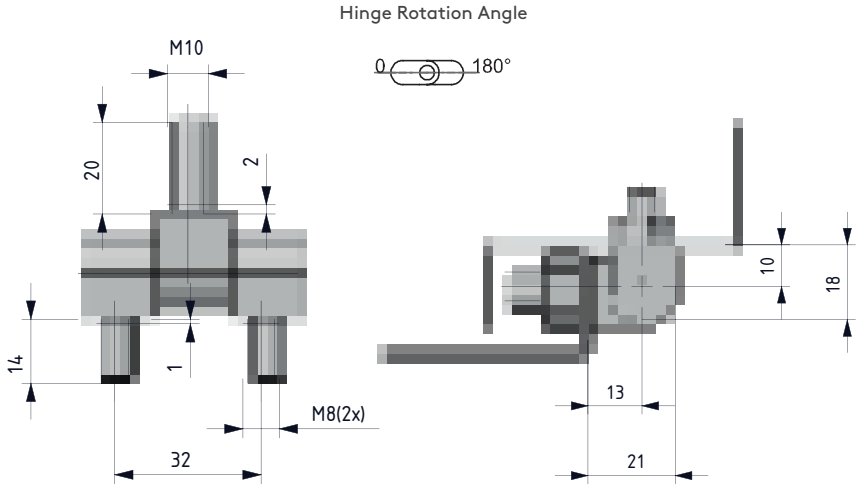

Group Code	Material	Finish
193	4	0

- Side-mounted hinge
- 16 mm parts made of stainless steel
- Parts are tightly fitted.

MATERIAL
Stainless Steel (AISI 303/304)

For other materials please check: page 289

TOGGLE LATCH 340.00.134

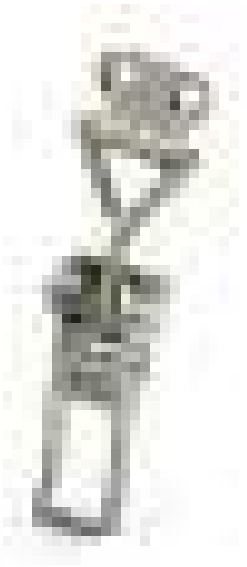

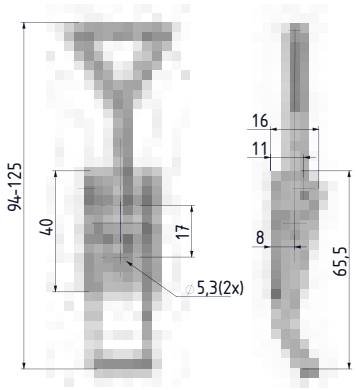

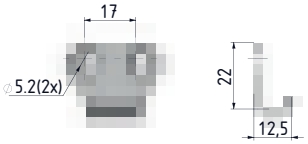

Catch plate

- Used for: tool boxes, cabinets, ships, agriculture and material equipments

MATERIAL
Stainless Steel (AISI 304)

TOGGLE LATCH 340.00.132

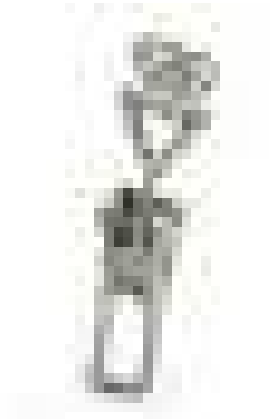

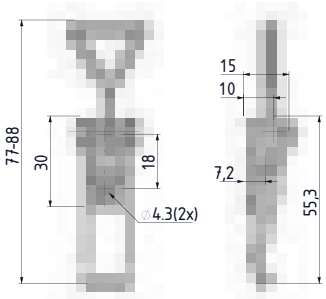

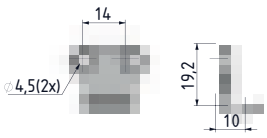

Catch plate

- Used for: tool boxes, cabinets, ships, agriculture and material equipments

MATERIAL
Stainless Steel (AISI 304)

For other materials please check: page 436

tel | +90 212 721 44 44 fax | +90 212 721 44 45

279 COVER STAY

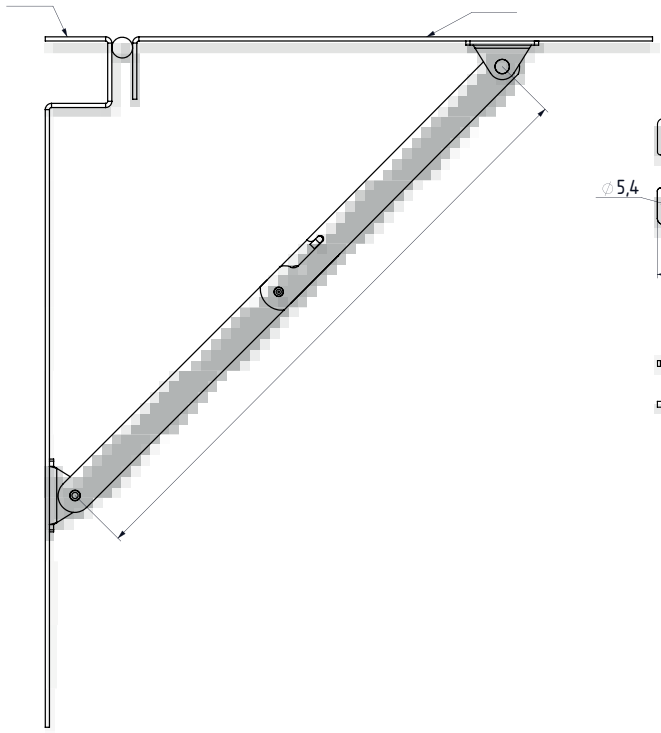

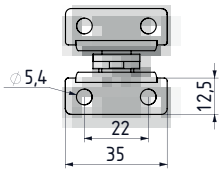

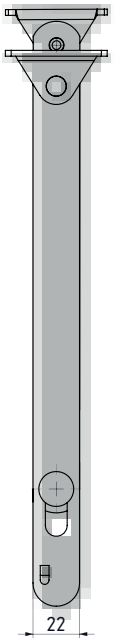

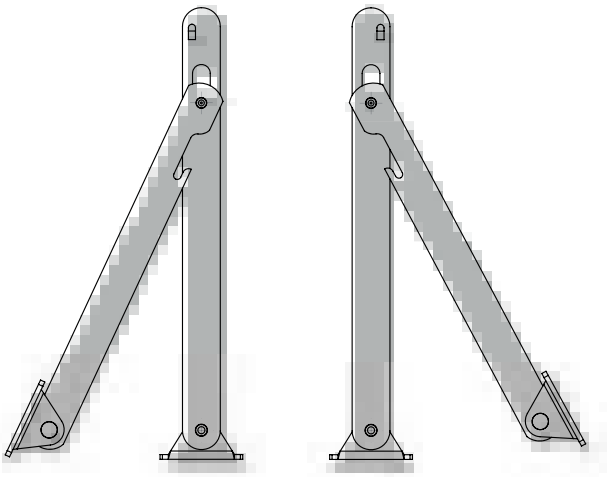

Lmm
292
202
135

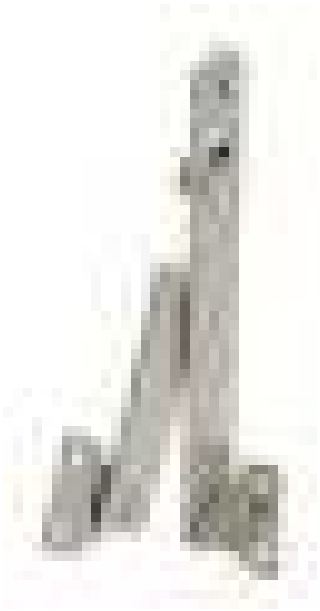

- Suitable for heavy-duty applications
- Manufactured using 4 mm thick steel

MATERIAL
Stainless Steel (AISI 304)

Group Code	Material	Finish	Length	Door Direction
279	4	0	L	

DOOR DIRECTION	
Right hand	001
Left hand	002

For other materials please check: page 443

COVER STAY

079

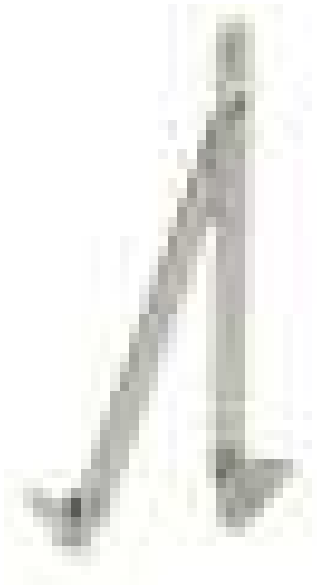

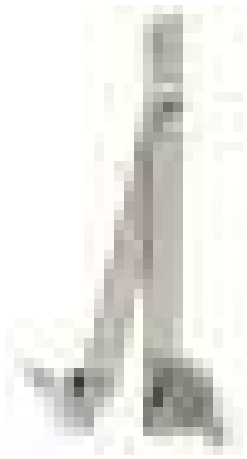

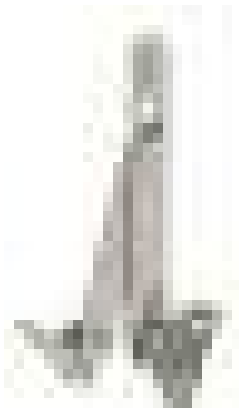

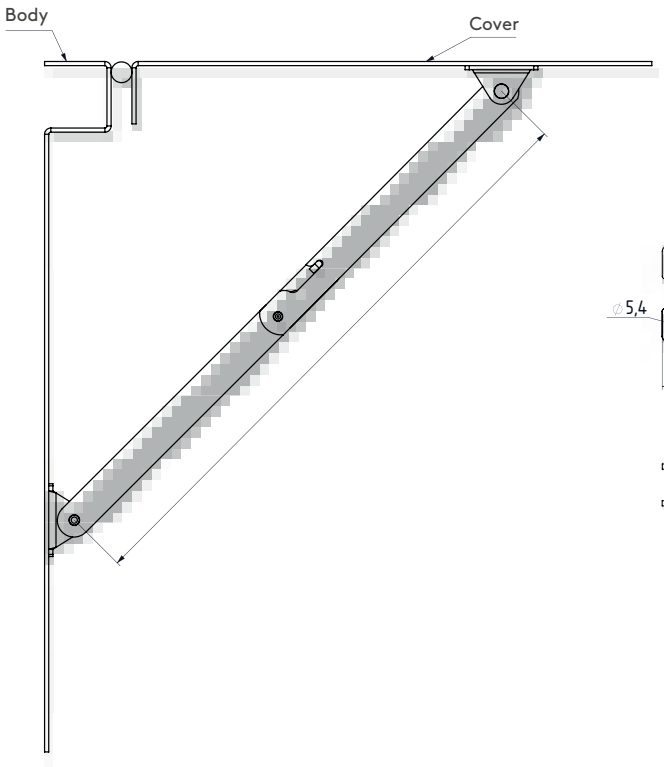

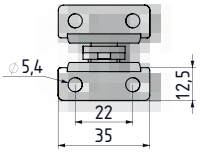

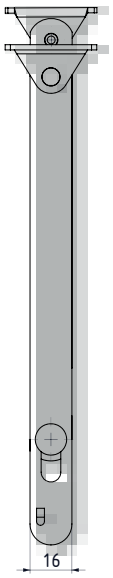

LEFT RIGHT

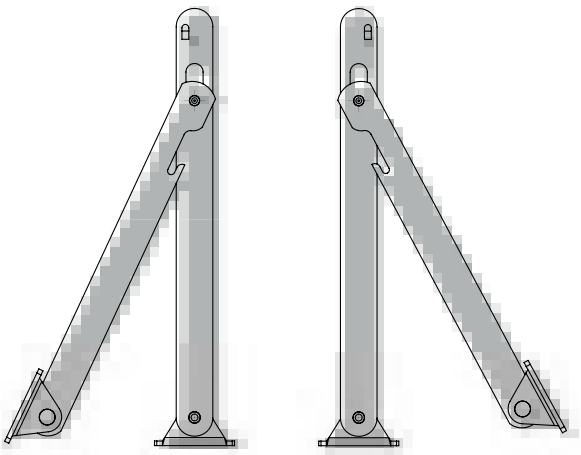

Lmm
292
202
135

Group Code	Material	Finish	Length	Door Direction
079	4	0	L	

DOOR DIRECTION	
Right hand	001
Left hand	002

MATERIAL
Stainless Steel (AISI 304)

For other materials please check:
page 442

tel | +90 212 721 44 44 fax | +90 212 721 44 45

179 COVER STAY

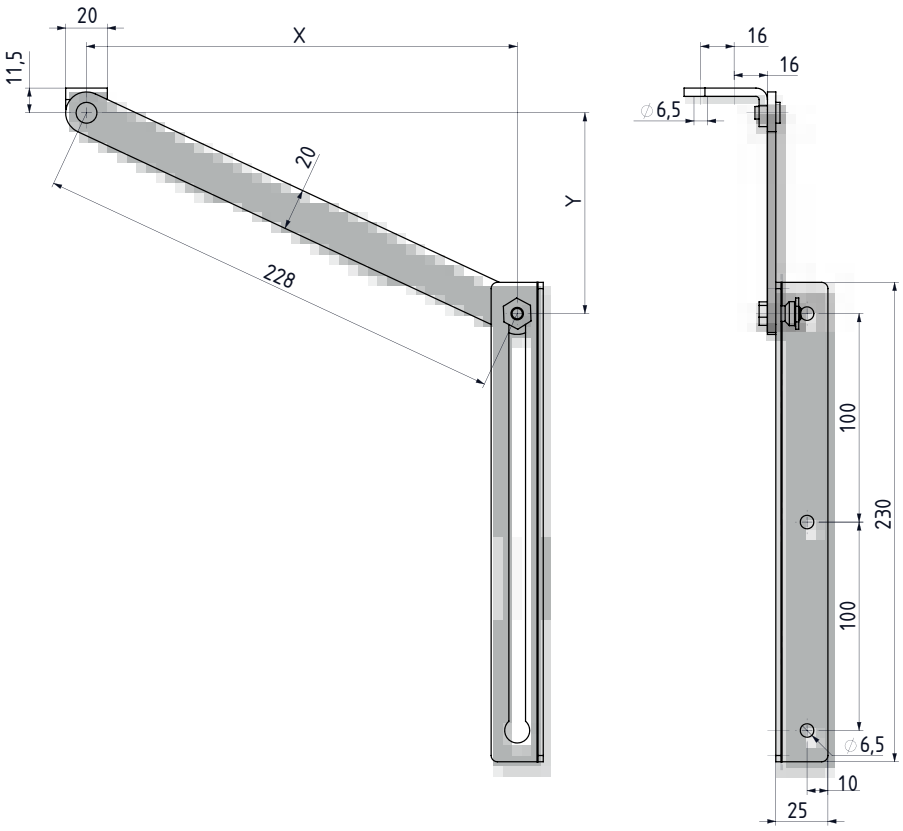

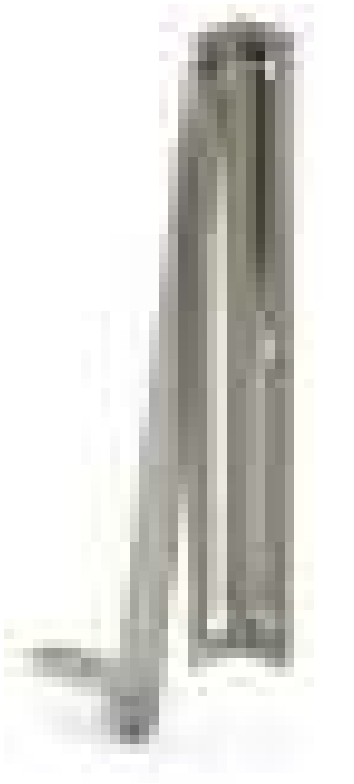

- Cover Stay with automatic lock to keep the door open
- suitable for left- and right-hand application

MATERIAL
Stainless Steel (AISI 304)

Installation dimensions

OPENING ANGLE	DIMENSIONS X	Y	MINIMAL DOOR WIDTH
90°	140	180	405
105°	120	166	390
120°	110	150	375
135°	100	146	370

For other configurations:
y= X+ min.40

Group Code	Material	Finish
179	4	0

For other materials please check: page 444

FAST FIND INDEX


522


524


525-526

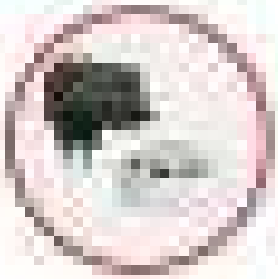
527

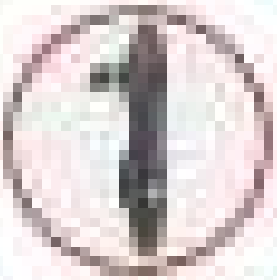
528-529


530-531


532-533

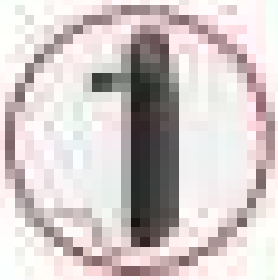
534-535

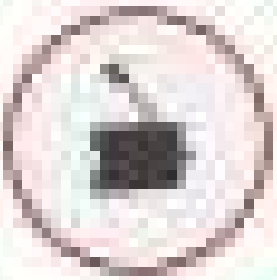
536


537


538

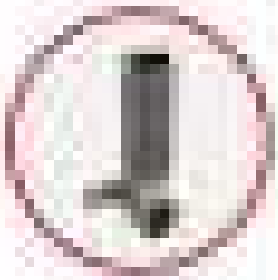
539

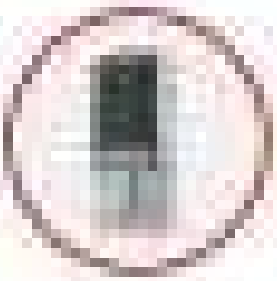
540

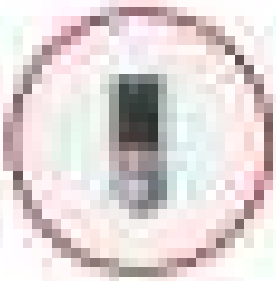
541

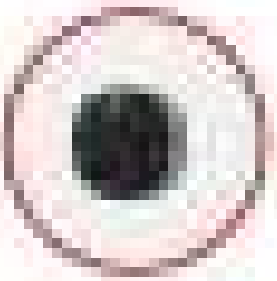
542

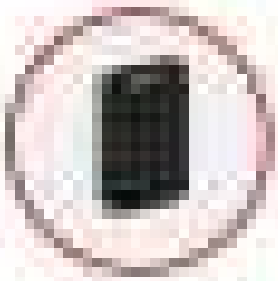
543

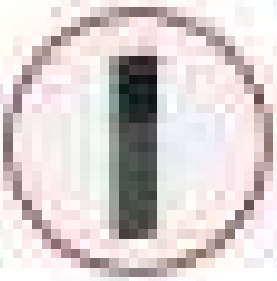
544

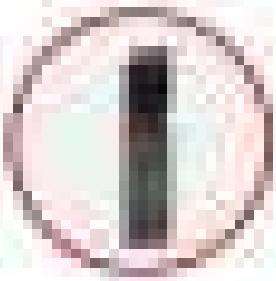
545

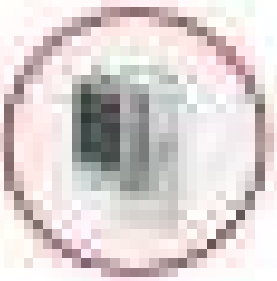
546


547



ELECTRONIC LOCKING SYSTEM

518-547

mesan
ESSENTRA COMPONENTS

e-mail | info@mesanlocks.com web | www.mesanlocks.com

MONITORING & ACCESS CONTROL CONCEPT

The security of IT cabinets in server rooms and data centres is becoming more important worldwide. The reason is that a typical IT infrastructure supports the entire organization and stores the know how of the company.

We have developed an integrated access control system called ELS.

This new system enables you to monitor and control your IT environment in a very efficient way. Sensors detect door access, variations in temperature, security and other variables to give you immediate notification and greater control over your network, all at a great value. Cabinet doors can be opened by RFID cards, a key pad or remote control units.

This solution manages who can open which cabinet doors and when and allows you to get a detailed report for each cabinet.

Basic features

- Provides environmental monitoring, access control and a management system
- Prevents unauthorized access
- Allows doors to be opened using a proximity card, keypad or via a web interface
- Accommodates sensors to monitor temperature, humidity, smoke, the presence of water or liquids, etc.
- Automatically generates an audio alert
- Records all the security information you need every time the door to a server cabinet is opened – whom, where, when



Applications

• Server cabinets • Data centres • Electric panels • Telecommunications • Kiosks • GSM Cabinets

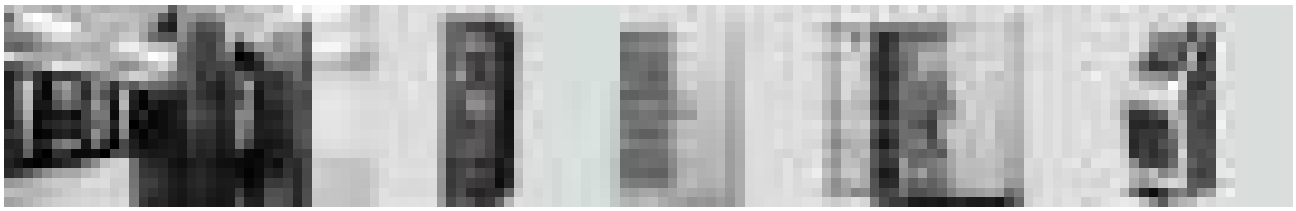

tel | +90 212 721 44 44 fax | +90 212 721 44 45

SYSTEM OVERVIEW

- IP monitoring of environmental conditions in the rack cabinet
- Control of physical access to the rack cabinet
- User interface via proximity card reader or keypad
- Electronic lock access authorisation

Monitoring and Access Control Units



Management Software

ACU : Access Control Unit
ACU Plus : Access Control Unit
AIK : Access Interface Keypad
AIP : Access Interface Proximity

Standalone Access Interfaces

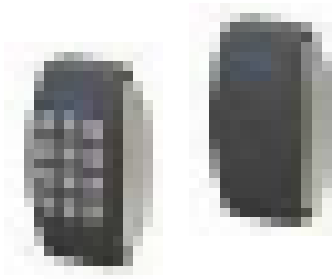

S-AIK : Access Interface Keypad
S-AIP : Access Interface Proximity

Other Electromechanical Locks



Electronic Swinghandles



ACU
ACCESS CONTROL UNIT

3402



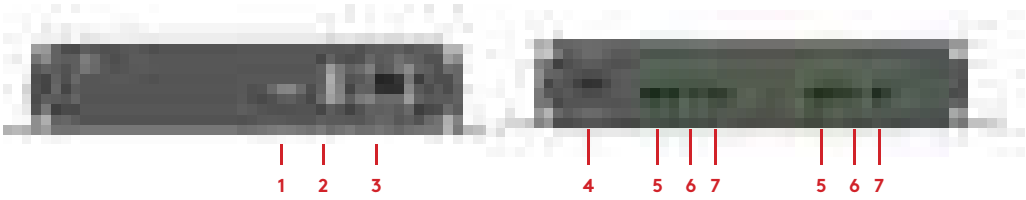

1 ▶ LED indicator
2 ▶ USB 2.0
3 ▶ Ethernet port 10/100
4 ▶ Power input (12VDC 3A)
5 ▶ 18 x access interface inputs
6 ▶ 2 x lock outputs
7 ▶ 2 x dry contact inputs

The ACU is an intelligent device for controlling electronic locks and monitoring door status.

- Control of physical access to the rack cabinet
- Monitors and manage security conditions over IP
- User database
- Management software for monitoring and configuring the unit
- A sensor for detecting the state of the door (open/closed) can be connected
- Up to 16 AIs (3414 and 3415) can be connected to ACU.

MANAGEMENT SOFTWARE
- Configure network settings (IP address, subnet mask, default gateway, DNS, etc.) and user-administrative settings
- Add and remove users
- View and delete the logs

APPLICATIONS
Suitable for data centres, co-location centres, web hosting facilities, telecom racks or any unmanned area/site that needs to be monitored

Dry Contact Inputs
- Dry contact inputs to monitor changes in the environment
- Inputs can be used as sensor input for detecting the state of the door (open/closed)

Access Interfaces
- 2 x access interface inputs allow access by entering a code number or presenting a proximity card.
- Possible to connect 3414 - AIK and 3415 - AIP devices.

Lock Outputs
- 2 x lock outputs to control physical access to the cabinet
- Possible to connect wide range of locks.

MANAGEMENT SOFTWARE

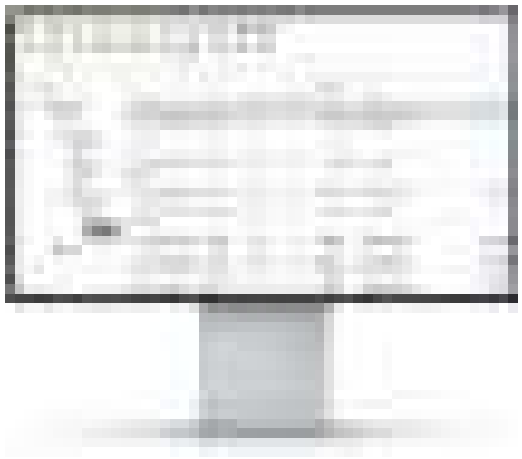

- User friendly interface
- Support SMS and email notifications
- Monitor all door and handle status in one screen
- Control all connected swinghandle from remote
- MS SQL database
- Easy configuration with ELS Configuration Software

tel | +90 212 721 44 44 fax | +90 212 721 44 45

SYSTEM OVERVIEW

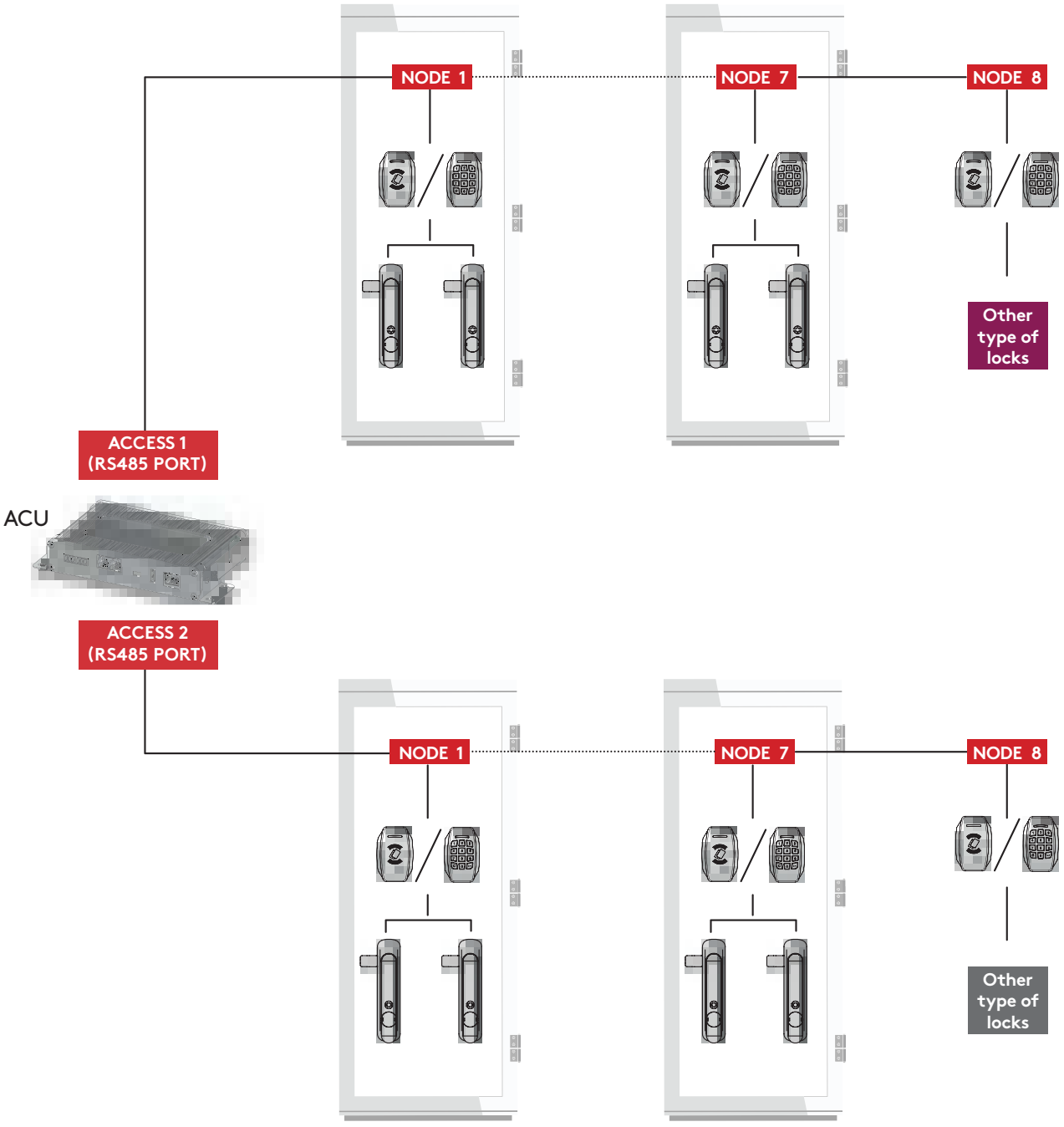

- Up to 18 access interfacess can be connected to access control unit.
- Up to 32 swinghandle can be controlled by one access control unit.
- Two access interfacess are reserved for use of different type of locks (Node 8).

ACU PLUS
ACCESS CONTROL UNIT

3403

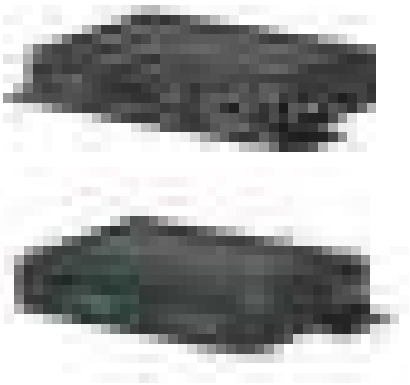

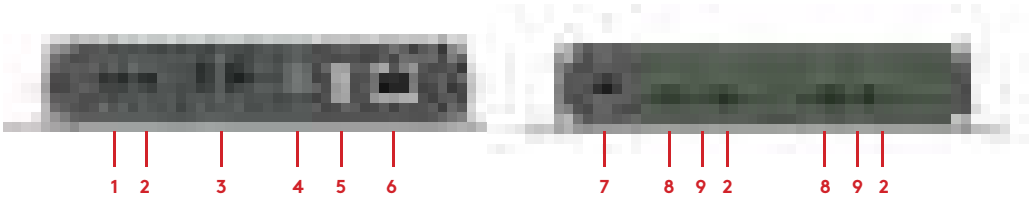

1 ▶ Dry contact output (2A)
2 ▶ 4 x dry contact inputs
3 ▶ 2 x analog sensors
4 ▶ LED indicator
5 ▶ USB 2.0
6 ▶ Ethernet port 10/100
7 ▶ Power input (12VDC 3A)
8 ▶ 18 x access interface inputs
9 ▶ 2 x lock outputs

The ACU Plus is an intelligent device for monitoring environmental variations, such as temperature, humidity, smoke, presence of water or liquids, etc. and controllig electronic locks and monitoring door status.

- Control of physical access to the rack cabinet
- Monitors and manage environmental and security conditions over IP
- Alerts are sent using email when any monitored environmental condition exceeds a user-specified range
- User database
- Management software for monitoring and configuring the unit
- A sensor for detecting the state of the door (open/closed) can be connected
- Up to 18 AIs (3414 and 3415) can be connected to ACU Plus.

MANAGEMENT SOFTWARE

- Configure sensor thresholds, set automatic operation and alarm rules
- Monitor current sensor values and alarm status
- Configure network settings (IP address, subnet mask, default gateway, DNS, etc.) and user-administrative settings
- Add and remove users
- View and delete the logs

APPLICATIONS

Suitable for data centres, co-location centres, web hosting facilities, telecom racks or any unmanned area/site that needs to be monitored

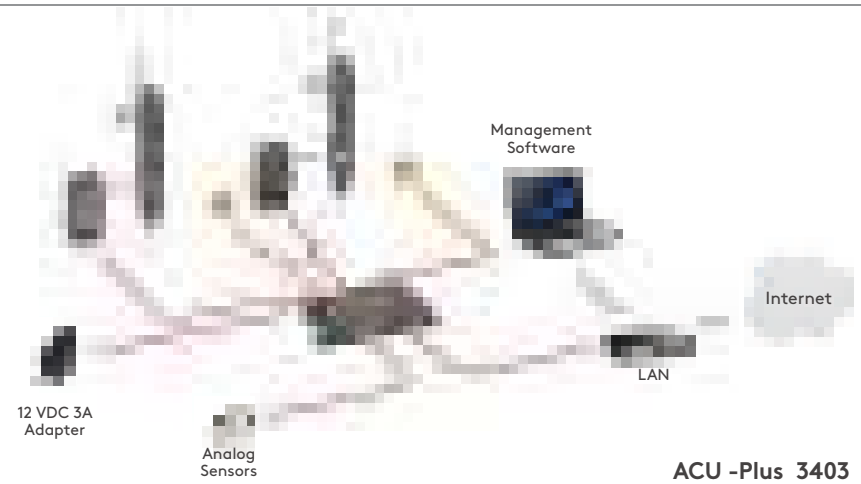

ACU -Plus 3403
System Overview

Dry Contact Output
- Dry contact outputs to control, switch on/off external low power devices.
- Output can be used as a NO (Normally Open) or NC (Normally Closed).

Dry Contact Inputs
- Dry contact inputs to monitor changes in the environment.
- Inputs can be used as sensor input for detecting the state of the door (open/closed)

Analog Sensors
- 2 x analog sensors outputs to monitor environmental conditions.
- All types of Essentra analog sensors can be connected.

Access Interfaces
- 2 x access interface inputs allow access by entering a code number or presenting a proximity card.
- Possible to connect 3414 - AIK and 3415 - AIP devices.

Lock Outputs
- 2 x lock outputs to control physical access to the cabinet.
- Possible to connect wide range of locks.

tel | +90 212 721 44 44 fax | +90 212 721 44 45

3416 S-AIK STANDALONE ACCESS INTERFACE KEYPAD

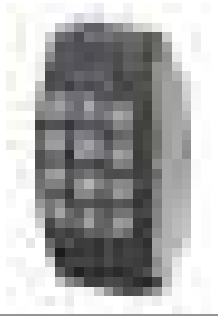

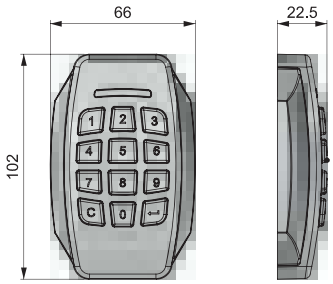



12 VDC 1A
Adapter

- Two level password (Master and User)
- Two lock outputs to control physical access to the cabinet
- Possible to connect wide range of locks including electronic swinghandles
- 12 Volt DC supply voltage
- Material: ABS Cover and Zamak5 Body
- It can control the locks separately
- Beep tones and LEDs on the AI device inform the user about the acceptance or rejection of an operation.

STATUS INDICATORS		
Signal 1		Ready
Signal2		Error
Signal 3		Ok
Signal 3		Menu

Access interfaces are user-interface devices that allow access by entering a code number or presenting a proximity card.

Beep tones and LEDs on the AI device inform the user about the acceptance or rejection of an operation.

3417 S-AIP STANDALONE ACCESS INTERFACE PROXIMTY

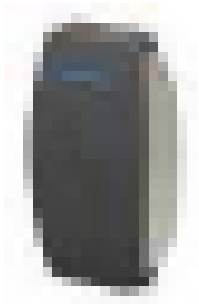

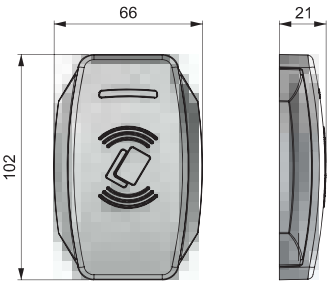



12 VDC 1A
Adapter

- 2 levels Card (RFID tag) management system (Master and User)
- Standard ISO-14443A RFID
- Two lock outputs to control physical access to the cabinet
- Possible to connect wide range of locks including electronic swinghandles
- 12 Volt DC supply voltage
- Material: ABS Cover and Zamak5 Body
- It can control the locks separately
- Beep tones and LEDs on the AI device inform the user babout the acceptance or rejection of an operation.



RFID card: 13.56Mhz MIFARE - Standard ISO14443A

Order separately
Printed: (34002639)
Unprinted: (34002640)

AIK ACCESS INTERFACE KEYPAD — 3414

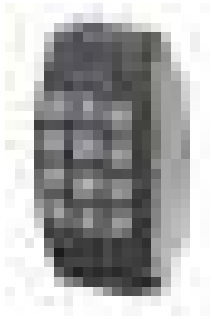

Access interfaces are user-interface devices that allow access by entering a code number or presenting a proximity card.

Beep tones and LEDs on the AI device inform the user about the acceptance or rejection of an operation.

AIP ACCESS INTERFACE PROXIMTY — 3415



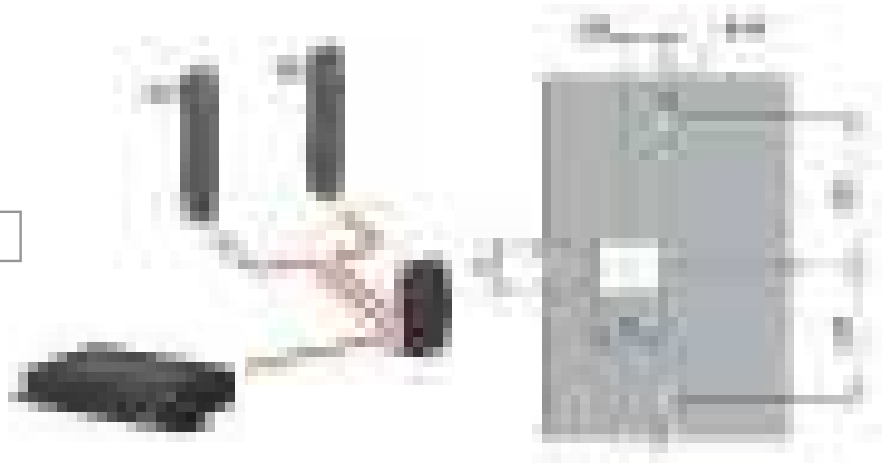

These access interfaces are used with access control units and they can control to swinghandles (ACU Plus - 3403 and ACU - 3402)

RFID card: 13.56Mhz MIFARE - Standard ISO14443A

Order separately
Printed: (34002639) / Unprinted: (34002640)

ACCESSORIES

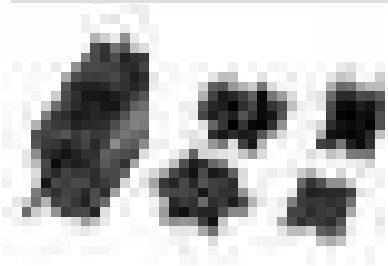

AC-DC Power Supply
12 Volt DC 3 Amper
(34002625)

- Universal input voltage range.
- Up to 36 W continuous power.
- Interchangeable Ac blades for global use.
- Used with monitoring access control units

Note: 34002625 Europe blade included.
Please contacts Essentra for other blades.



AC-DC Power Supply
12 Volt DC 1 Amper
(34030041)

- Universal input voltage range.
- Up to 12 W continuous power.
- Used with standalone access interfaces.

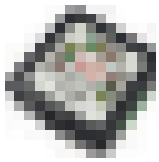

RS 485 Repeater
(34030063)

- Used to connect access interfaces (AIK - 3414 and AIP - 3415) to each other.



Electronic swinghandle connection cable

CABLE LENGHT	CODE
0,4 meter	34030039
4 meter	34030006
6 meter	34030064

- Used to connect Electronic swing handles to standalone access interfaces
- The same connectors are crimped both ends of the cable.



ACU - AI connection cable
(4 meter)
(34030040)

- Used to connect access interfaces (AIK - 3414 and AIP - 3415) to monitoring and access control units.

tel | +90 212 721 44 44 fax | +90 212 721 44 45

ANALOG SENSORS

Sensor is needed for measurement of temperature indoors.	**Temperature**		
Temperature : Min. -50° C - Max.105° C / Humidity : Min. 5% - Max. 95% (Non-Condensing)			**34002631**
Sensor is needed for measurement of temperature outdoors	**Outdoor Temperature**		
Temperature : Min. -10° C - Max.80° C / Humidity : Min. 5% - Max. 95% (Non-Condensing)			**34002637**
Sensor is needed for measurement of relative humidity 10-95% indoors with relative accuracy 5%.	**Humidity**		
Temperature : Min. -10° C - Max.80° C / Humidity : Min. 5% - Max. 95% (Non-Condensing)			**34002649**
Sensor is needed for measurement of AC 110-240V	**AC Voltage**	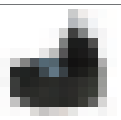	
Temperature : Min. -10° C - Max.80° C / Humidity : Min. 5% - Max. 95% (Non-Condensing)			**34002638**
At installation on doors, windows, etc., sensor controls status of door, window: opened, closed.	**Access Sensor**		
Temperature : Min. -10° C - Max.80° C / Humidity : Min. 5% - Max. 95% (Non-Condensing)			**34002634**
At installation on walls, windows, etc., sensor monitors vibration. Chain connection is possible.	**Vibration**		
Temperature : Min. -10° C - Max.80° C / Temperature : Min. -10° C - Max.80° C			**34002635**
Detector detects smoke indoors. Chain connection is possible.	**Smoke**		
Temperature : Min. -10° C - Max.80° C / Humidity : Min. 5% - Max. 95% (Non-Condensing)			**34002632**
Sensor is needed for control of movement over an infra-red range.	**Motion (PIR)**		
Temperature : Min. -10° C - Max.80° C / Humidity : Min. 5% - Max. 95% (Non-Condensing)			**34002636**
When water is in contact with the metal cores, the sensor indicates the emergence of moisture. If sensor is constantly responding to high water levels, replace the sensor with a level sensor.Attention! Metal cores are detectors of water, mount strictly downwards as close as its possible to a floor.	**Water Leak**		
Temperature : Min. -10° C - Max.80° C / Humidity : Min. 5% - Max. 95% (Non-Condensing)			**34002633**
When water is in contact with detection cable sensor indicates the emergence of moisture. Water detection cable 50 is ordered separately art. SC-WDC! If sensor is constantly responding to high water levels, replace it with a level sensor.	**Water Leak Cable**		
Temperature : Min. -10° C - Max.80° C / Humidity : Min. 5% - Max. 95% (Non-Condensing)			**34002650**

ELECTRONIC SWINGHANDLE 3101

ALL IN METAL

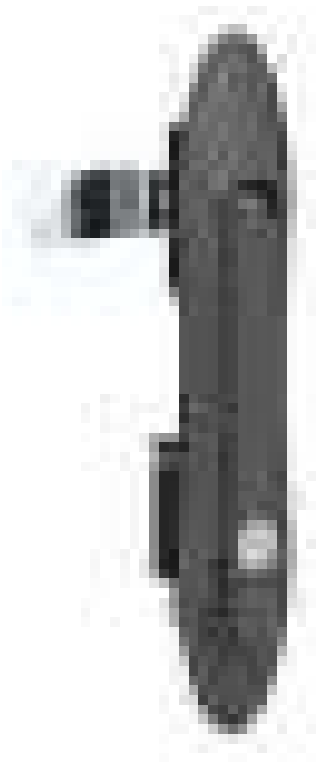

High security electronic products to protect your organisation's data

APPLICATIONS:

Rack cabinets
Server rooms
Telecomunication
Kiosks
GSM network cabinets

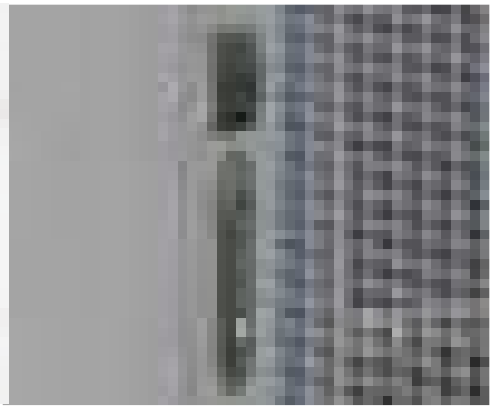

- All metal construction.
- Compatible with access control systems.
- Ability to work mechanically in case of power outage.
- Elegant design.
- Capable to inform door and handle status
- 12 VDC working voltage

MATERIALS

BODY:	Zamak DIN-EN 1774-ZnAl4Cu1
HANDLE:	Zamak DIN-EN 1774-ZnAl4Cu1
CAM:	Steel
SEAL:	Polyurethane

Electrical Specifications:

Operating Voltage: 12 VDC
Operating Temperature: +60/-10 C
Nominal Operating Current:
Standby: 6mA
Lock/Unlock: 75mA
Max. Curent: 400mA

PIN Connections;

PIN 1- GND
PIN 2- +12V
PIN 3- N/A
PIN 4- Door Position Sensor
PIN 5- Control Signal
PIN 6- Handle Position Sensor

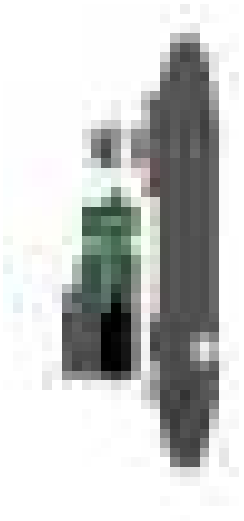

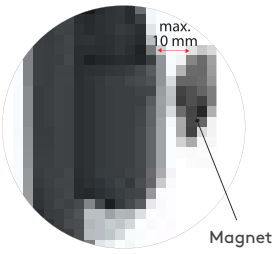

Open-close position of door can be monitored. The max distance between the magnet and the lock is 10 mm.

PIN DETAILS

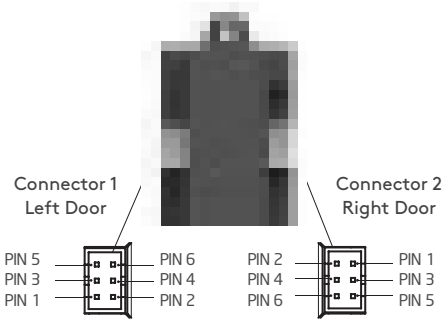

Both connectors have the same function.

Electronic swinghandle connection cable



The same connectors are crimped both ends of the cable.

tel | +90 212 721 44 44 fax | +90 212 721 44 45

3102 ELECTRONIC SWINGHANDLE

ALL IN METAL

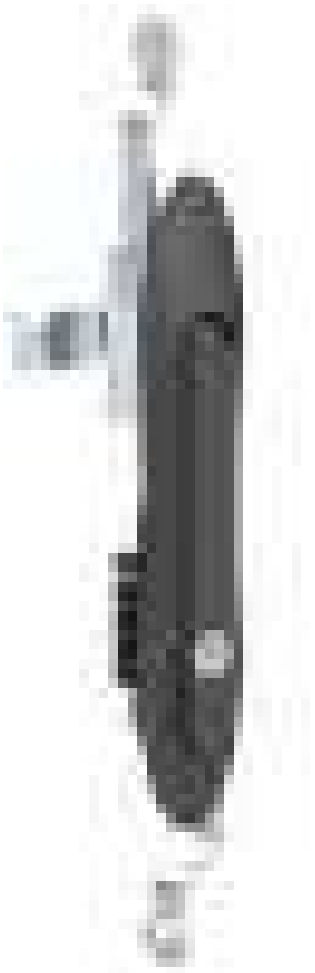

3101

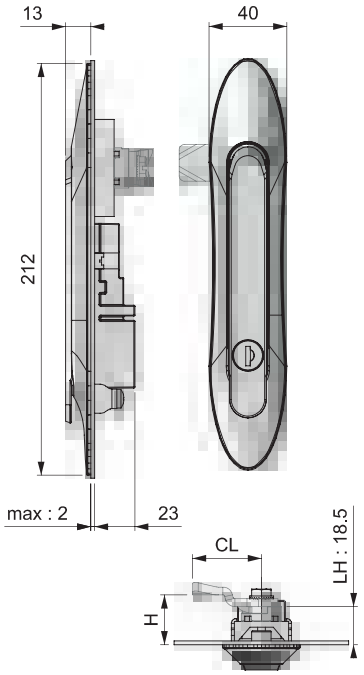

3102

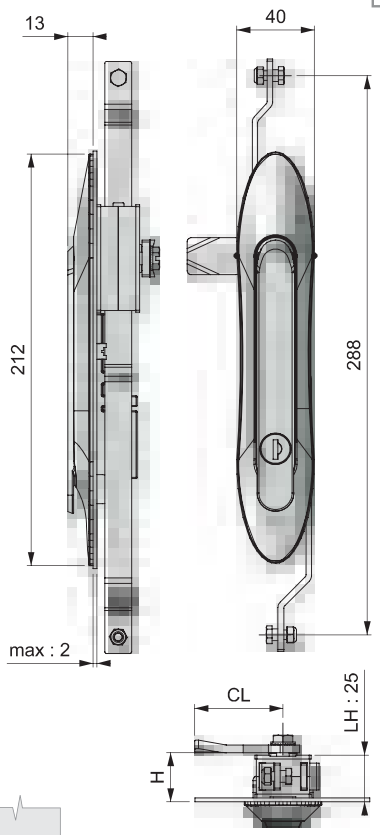

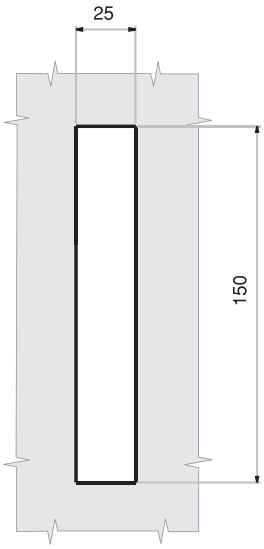

Cut out

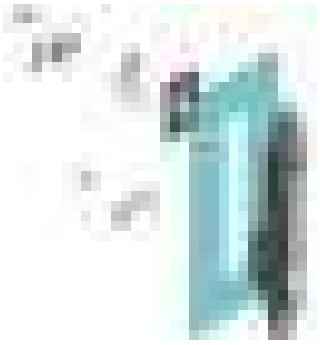

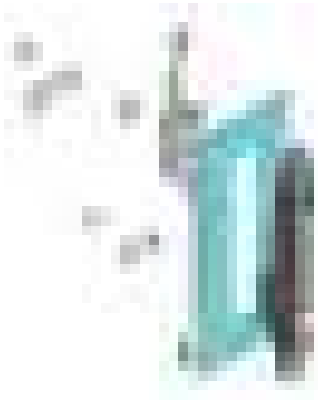

- All metal construction.
- Compatible with access control systems.
- Ability to work mechanically in case of power outage.
- Elegant design.
- Capable to inform door and handle status
- 12 VDC working voltage

MATERIALS

BODY:	Zamak DIN-EN 1774-ZnAl4Cu1
HANDLE:	Zamak DIN-EN 1774-ZnAl4Cu1
CAM:	Steel
SEAL:	Polyurethane

SPECIFICATIONS	DD
Stainless steel dust cap (Keyed alike)	40
Stainless steel dust cap (Keyed differ)	32

Group Code	Handle		Body		Cylinder	Cam
	1	2	1	2	DD	CC



For cams and rods, please check
▸ Page: 170 -178

ELECTRONIC SWINGHANDLE 3103



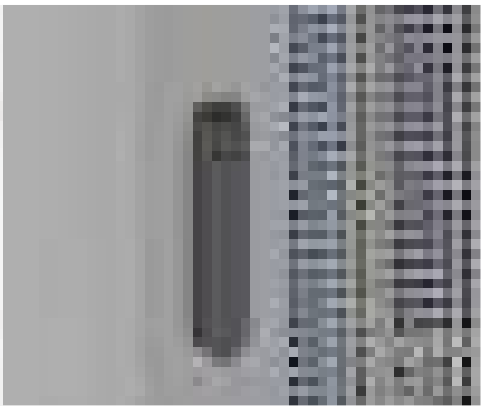

High security electronic products to protect your organisation's data

APPLICATIONS:

Rack cabinets
Server rooms
Telecomunication
Kiosks
GSM network cabinets

- LED indicators
- Compatible with access control systems.
- Ability to work mechanically in case of power outage.
- Elegant design.
- Capable to inform door and handle status
- 12 VDC working voltage

MATERIALS

BODY:	Polyamide DIN-EN ISO 1043-1 PA6 GFR 30
HANDLE:	Polyamide DIN-EN ISO 1043-1 PA6 GFR 30
CAM:	Steel



Electrical Specifications:

Operating Voltage: 12 VDC
Operating Temperature: +60/-10 C
Nominal Operating Current:
Standby: 6mA
Lock/Unlock: 75mA
Max. Curent: 400mA

PIN Connections;

PIN 1- GND
PIN 2- +12V
PIN 3- N/A
PIN 4- Door Position Sensor
PIN 5- Control Signal
PIN 6- Handle Position Sensor

Lock Warning Signs			
Signal 1		While opening the lock	LED 1 blinks fast.
Signal 2		While closing the lock	LED 2 blinks fast.
Signal 3		When the lock is open	Both LEDs blink fast.
Signal 4		When the handle is open	Both LEDs not lit
Signal 5		Error	Both LEDs blink slow.
Signal 6		Ready	Both LEDs are lit.

ELECTRONIC REAR COVER

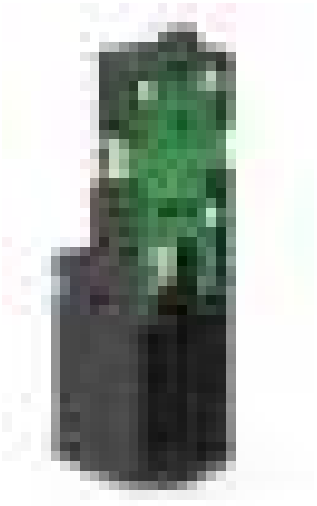

PIN DETAILS

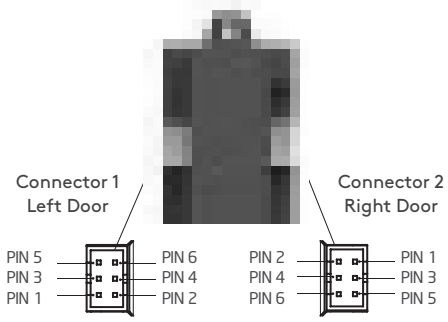

Both connectors have the same function.

Connection Cable



The same connectors are crimped both ends of the cable.

tel | +90 212 721 44 44 fax | +90 212 721 44 45

3104 ELECTRONIC SWINGHANDLE

3103

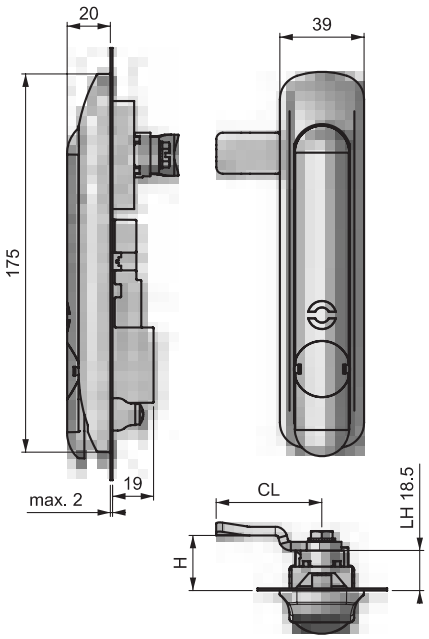

3104

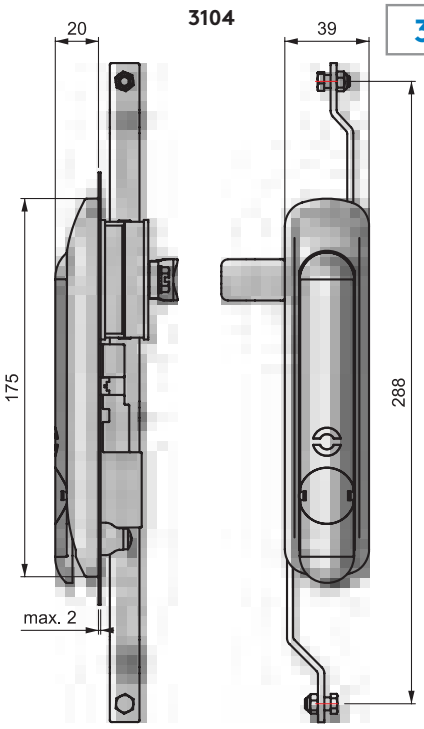

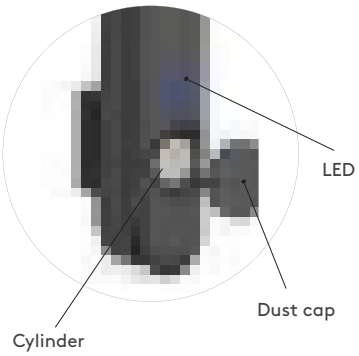

In case of power outage remove the dust cover on the handle and open with the key.

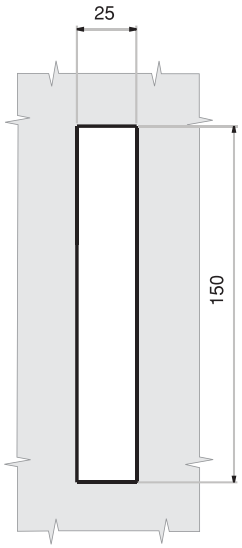

Cut out

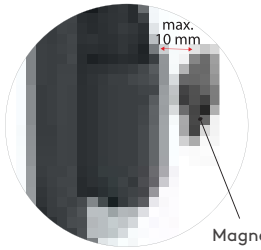

Open-close position of door can be monitored. The max distance between the magnet and the lock is 10 mm.

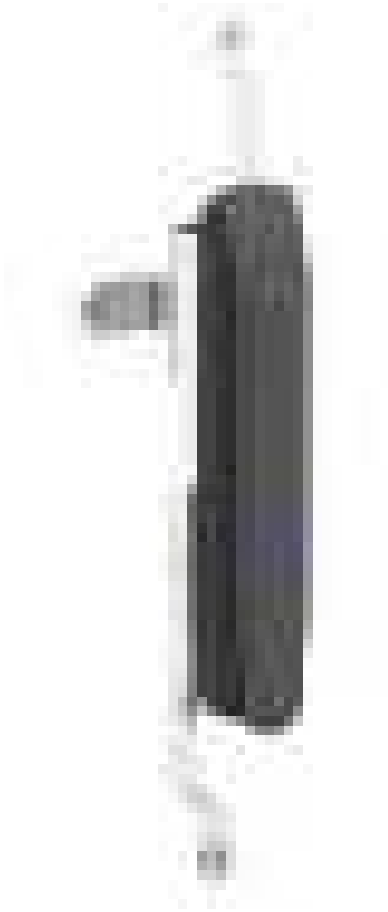

MATERIALS

BODY:	Polyamide DIN-EN ISO 1043-1 PA6 GFR 30
HANDLE:	Polyamide DIN-EN ISO 1043-1 PA6 GFR 30
CAM:	Steel

SPECIFICATIONS	DD
Stainless steel dust cap (Keyed alike)	40
Stainless steel dust cap (Keyed differ)	32

Group Code	Handle		Body		Cylinder	Cam
	2	0	2	0	DD	CC



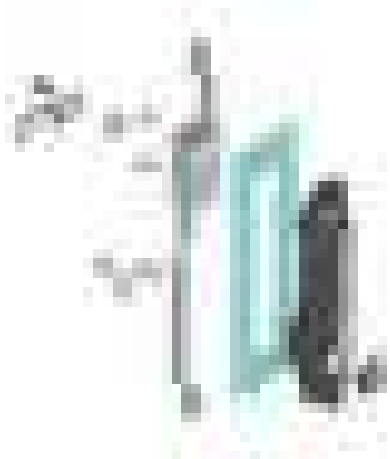

For cams and rods, please check
▸ Page: 170 -178

ELECTRONIC SWINGHANDLE 3111

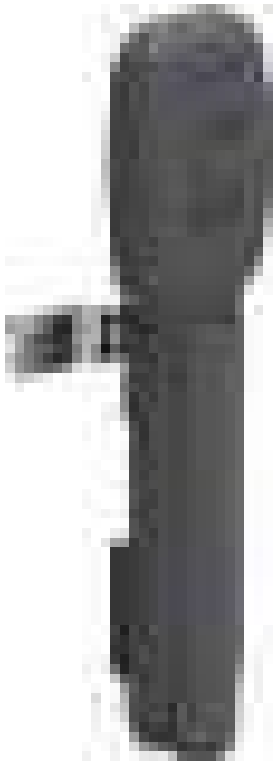

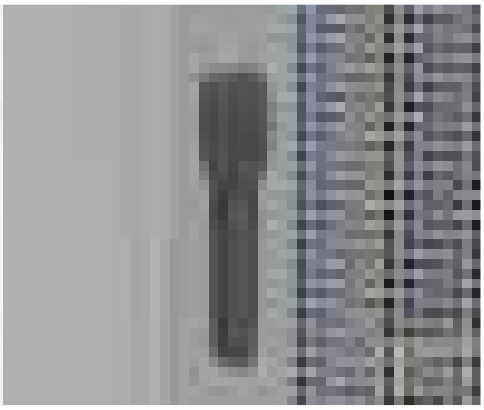

High security electronic products to protect your organisation's data

APPLICATIONS:

Rack cabinets
Server rooms
Telecomunication
Kiosks
GSM network cabinets

- Integrated RFID reader.
- Ability to work mechanically in case of power outage
- Capable to inform door and handle status
- LED indicators both on lock and reader
- Supports RS 485 protocol for other protocols please contact to Essentra
- Can be control a swinghandle (3101,3102,3103 and 3104) other than itself
- 12 VDC working voltage
- LED indicators

MATERIALS

BODY:	Polyamide DIN-EN ISO 1043-1 PA6 GFR 30
HANDLE:	Polyamide DIN-EN ISO 1043-1 PA6 GFR 30
CAM:	Steel

Electrical Specifications:

Operating Voltage: 12 VDC
Operating Temperature: +60/-10 C
Nominal Operating Current:
Standby: 6mA
Lock/Unlock: 75mA
Max. Curent: 400mA

PIN Connections;

PIN 1- GND
PIN 2- +12V
PIN 3- N/A
PIN 4- Door Position Sensor
PIN 5- Control Signal
PIN 6- Handle Position Sensor

Lock Warning Signs			
Signal 1		While opening the lock	LED 1 blinks fast.
Signal 2		While closing the lock	LED 2 blinks fast.
Signal 3		When the lock is open	Both LEDs blink fast.
Signal 4		When the handle is open	Both LEDs not lit
Signal 5		Error	Both LEDs blink slow.
Signal 6		Ready	Both LEDs are lit.

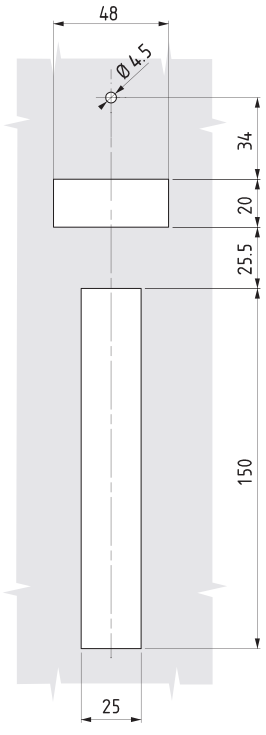

Cut out

PIN DETAILS

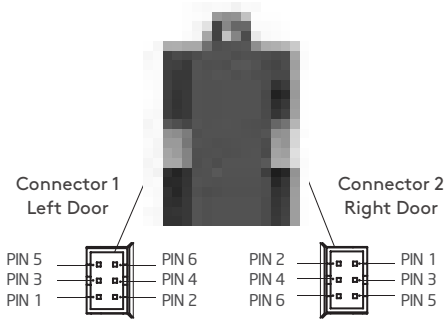

Both connectors have the same function.

Connection Cable



The same connectors are crimped both ends of the cable.

tel | +90 212 721 44 44 fax | +90 212 721 44 45

3111

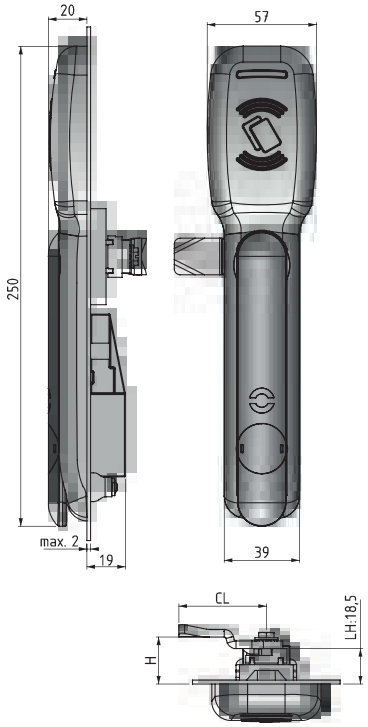

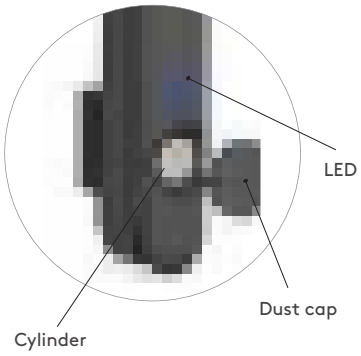

In case of power outage remove the dust cover on the handle and open with the key.

3112

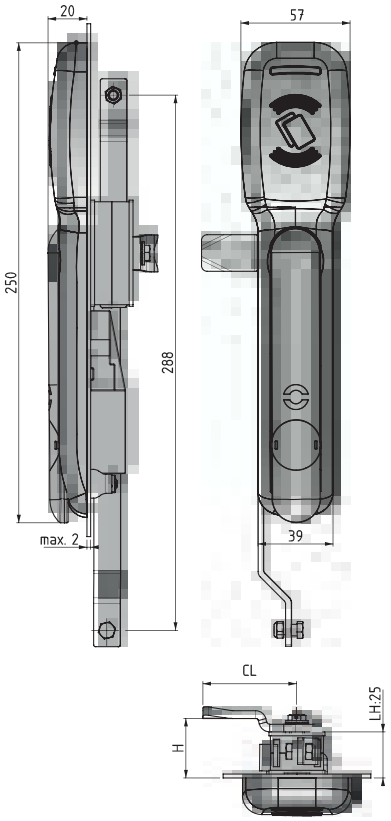

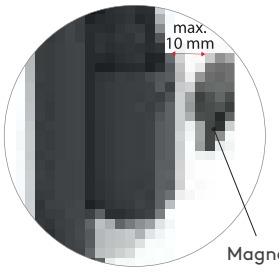

Open-close position of door can be monitored. The max distance between the magnet and the lock is 10 mm.

3112 ELECTRONIC SWINGHANDLE

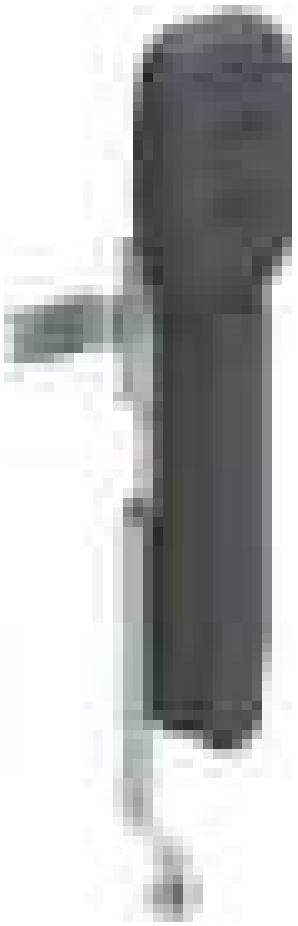

MATERIALS

BODY:	Polyamide DIN-EN ISO 1043-1 PA6 GFR 30
HANDLE:	Polyamide DIN-EN ISO 1043-1 PA6 GFR 30
MECHANISM:	Zamak DIN-EN 1774-ZnAl4Cu1
CAM:	Steel

SPECIFICATIONS	DD
Stainless steel dust cap (Keyed alike)	40
Stainless steel dust cap (Keyed differ)	32

Group Code	Handle		Body		Cylinder	Cam
	2	0	2	0	DD	CC



For cams and rods, please check
▸ Page: 170 -178

ELECTRONIC SWINGHANDLE 3105

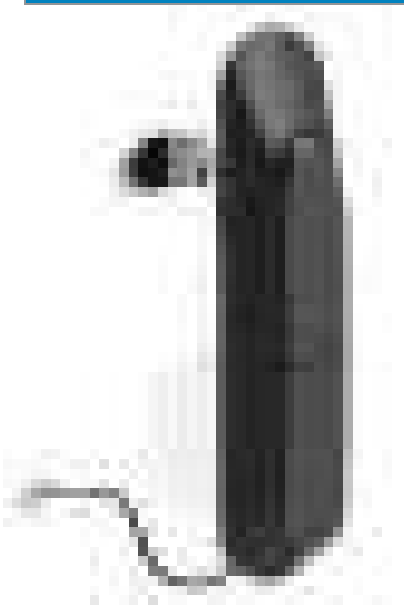



High security electronic products to protect your organisation's data

APPLICATIONS:

Outdoor cabinets
Telecomunication
Kiosks
ATMs
Electrical enclosures

- Compatible with access control systems.
- All metal construction
- Special geometry provides anti-vandalism safety
- Improved corrosion resistance
- Suitable to DIN V ENV 1630: 1999-04/WK2 test
- Double o-ring used for handle provides improved IP rating
- High-security cylinder alternative
- Better IP rating with moving dust cap

MATERIALS

BODY:	Zamak DIN-EN 1774-ZnAl4Cu1
GASKET:	Polyurethane
COVER:	Zamak DIN-EN 1774-ZnAl4Cu1

Standard Application **Electromechanical Application**



Simply changing the cover assembly is enough to switch from standard to electromechanical application

Lock operating principle

Electronical and mechanical

Technical specifications:

- Voltage: 48 VDC
- Current 500 mA
- High temperature resistance: 150 °C

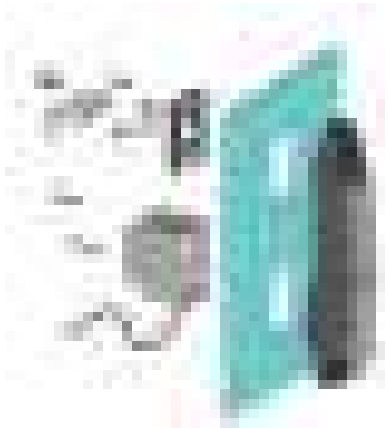

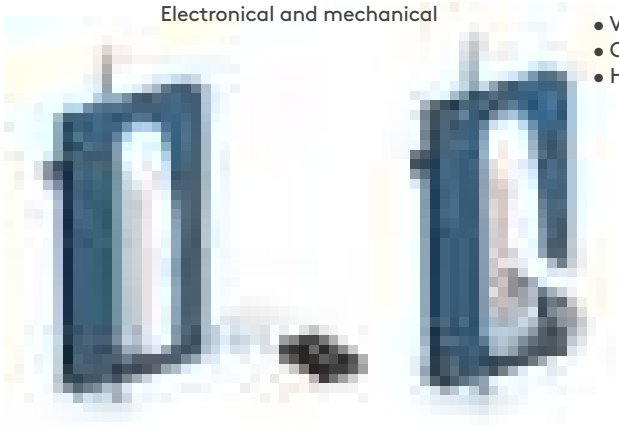

Electronic access options, remote control, card reader, etc., activate the lock. It is then ready to be opened by the mechanical key

⚠ **Note:** Remote control should be ordered separately

tel | +90 212 721 44 44 fax | +90 212 721 44 45

3105

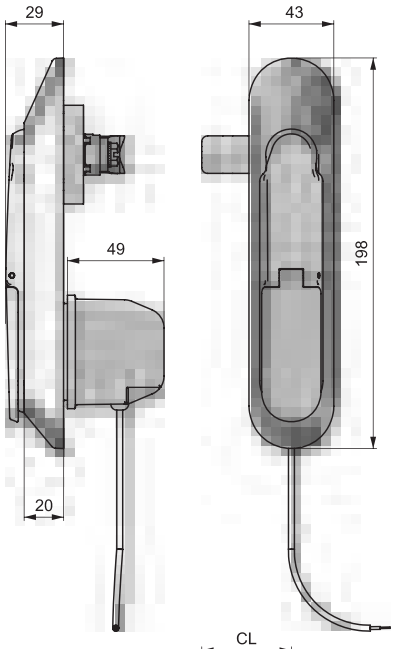

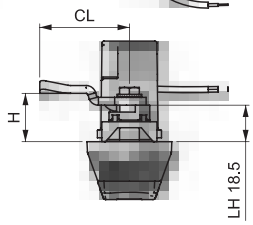

3106

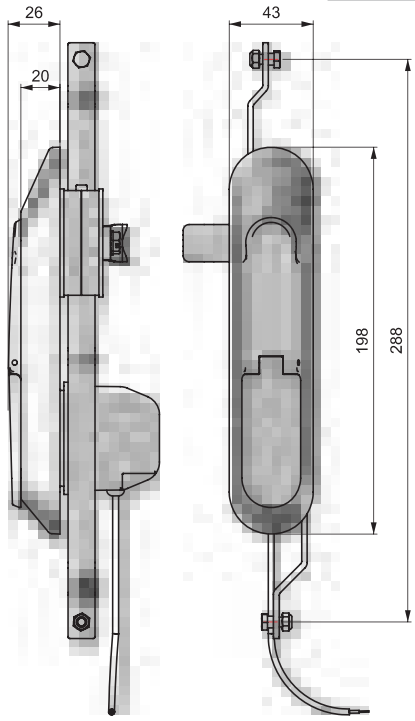

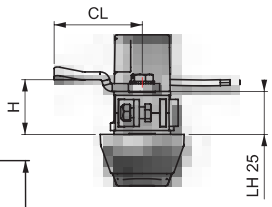

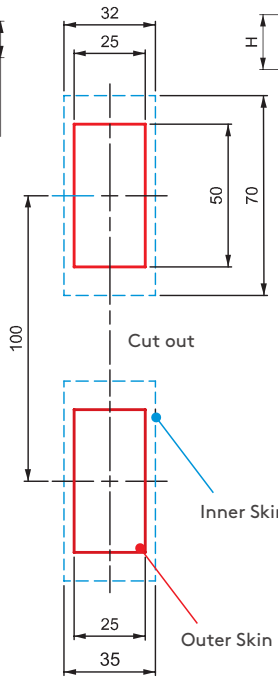

Assembly application

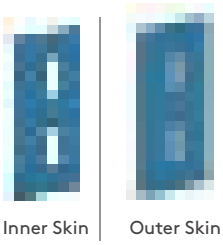

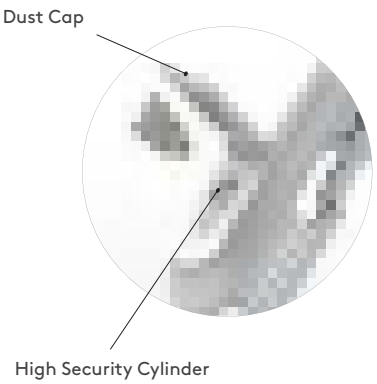

VERSION	V
Inner Skin	1
Outer Skin	3

Group Code	Version	Handle		Body		Cylinder	Cam
	V	1	2	1	2	DD	CC

HIGH SECURITY CYLINDER	
Zamak cylinder	
Keyed alike	Keyed differ
22	23

3106 ELECTRONIC SWINGHANDLE

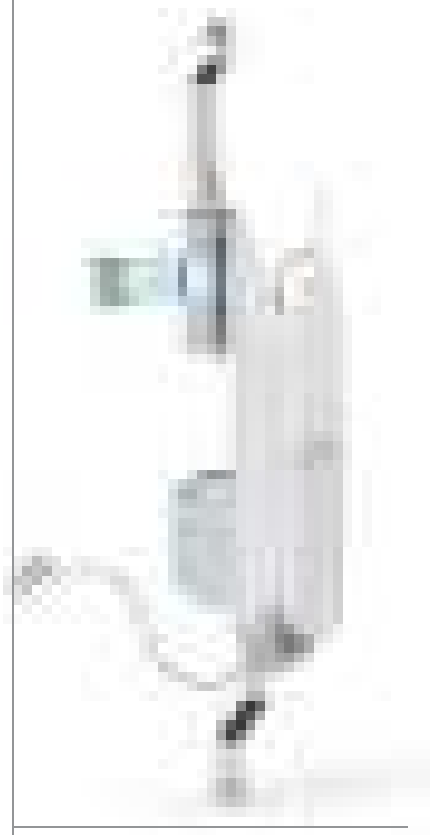

- Compatible with access control systems.
- All metal construction
- Special geometry provides anti-vandalism safety
- Improved corrosion resistance
- Meets DIN V ENV 1630:1999-04/ WK2 standard
- Double o-ring used for handle provides improved IP rating
- High-security cylinder alternative
- Better IP rating with moving dust cap

MATERIALS

BODY:	Zamak DIN-EN 1774-ZnAl4Cu1
MECHANISM:	Zamak DIN-EN 1774-ZnAl4Cu1
GASKET:	Polyurethane
COVER:	Zamak DIN-EN 1774-ZnAl4Cu1

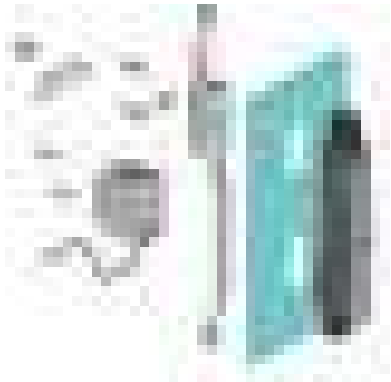

ELECTRONIC KEEPER 3341



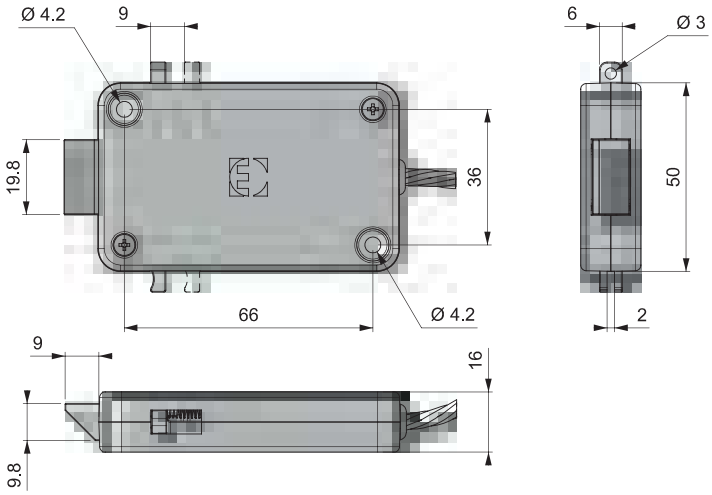

- Push to Close
- 12 Volt DC supply voltage
- Two different mechanical owerride option
- Auto locking
- Internal microswitch
- Microprocessor controlled gear motor
- Compatible with access control systems

MATERIALS

BODY:	Plastic
CAM:	Zamak 5

TECHNICAL SPECIFICATIONS

Cable Length	: 180 mm
Operating Voltage	: 12 Volt
Current	: Max. 500 mA
Stroke	: 9 mm

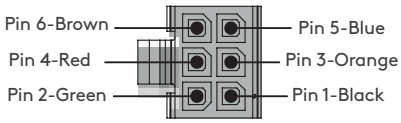

Pins	Colours	
Pin 1	Black	GND
Pin 2	Green	12 Volt DC
Pin 3	Orange	Signal
Pin 4	Red	Microswitch COM
Pin 5	Blue	Microswitch NO
Pin 6	Brown	N/A

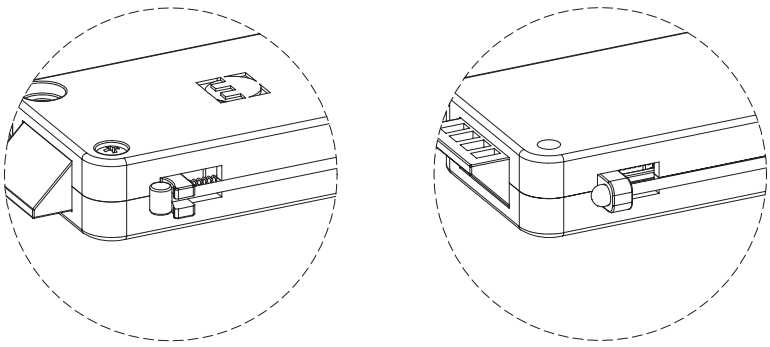

Two different mechanical override option

tel | +90 212 721 44 44 fax | +90 212 721 44 45

3311 SOLENOID LOCK



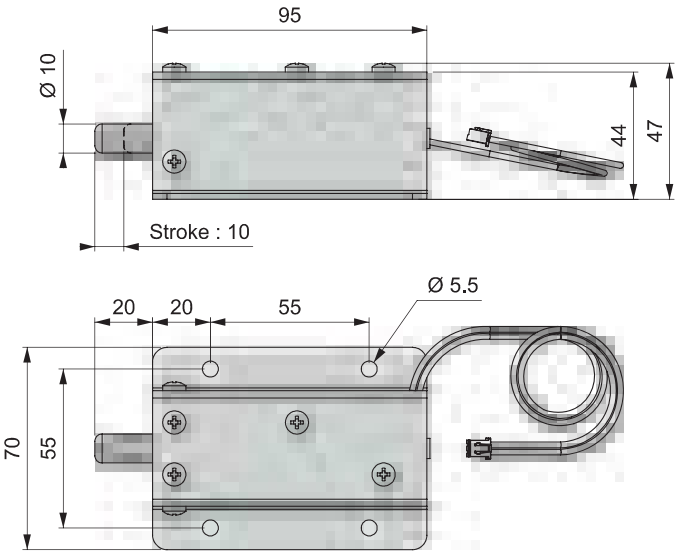

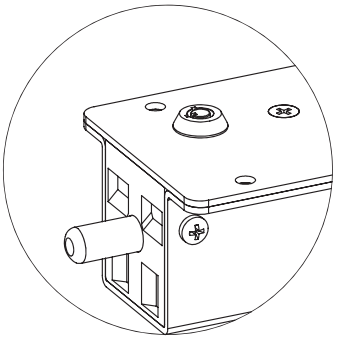

Mechanical override
with high security cylinder

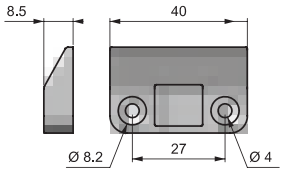

Bracket
Code: 30302223

- Compatible with access control systems
- Push to close with a special bracket
- Mechanical override option
- Auto locking
- DC type solenoid
- Solenoid has no polarity
- Resistance of solenoid varies with the applied voltage,
- The solenoid becomes hot (around 80 °C) when continiously energized, precautions should be taken to prevent burns

MATERIALS

BODY:	Steel
PLUNGER:	Steel
BRACKET:	Delrin

TECHNICAL SPECIFICATIONS

Operating Voltage	: 24 V DC
Current Consumtion	: 550 mA
Power Consumption	: 13,2 W
Operating Temperature Range	: - 5 °C / + 40 °C
Cable Length	: 30 cm
Stroke	: 10 mm

Please Contact Essentra
* For AC type of solenoids
* For different voltages
* For different strokes

3311 Solenoid Lock

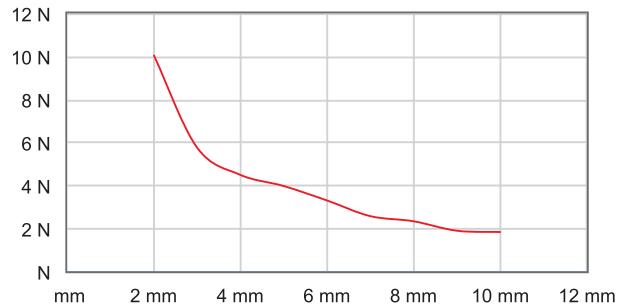

Force - Stroke Graph In Horizontal Installation

Group Code	Version
3311	V

VERSION	V
Without Mechanical Override	1
With Mechanical Override	2

ELECTRONIC CABINET LOCK 3204

Keypad

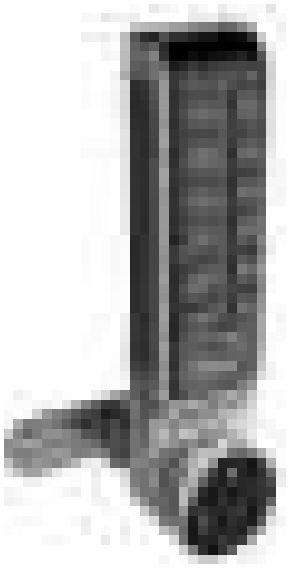

Electronic solutions for improving security

APPLICATIONS:

Various cabinets or lockers in sauna area, spa, gym, office, school, etc.

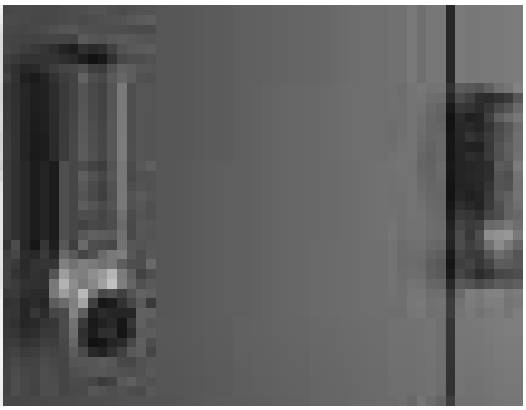

Technical specifications

• Operating voltage:	3x1.5 V = 4.5 V
• Battery:	3xAAA Alkali battery
• Battery life:	Approx. 1.5 year (daily 10 use)
• Password combination:	4-12 digit
• Operating temperature range:	-20°C ~ +70°C
• Operating humidity range:	0 ~ 90 % RH

- Ability to open with a password without card and key
- Elegant design suitable for office environments
- Multi-user support
- Micro USB emergency power-supply
- Low battery level indicator
- For general or specialised use
- Easy installation
- Easy to use
- High-security
- Burglar alarm
- Melody yes/no adjustment
- Stylish visual-warning LEDs

MATERIALS

BODY:	Aluminium
HANDLE:	Aluminium
PANEL:	Plastic
CAM:	Steel

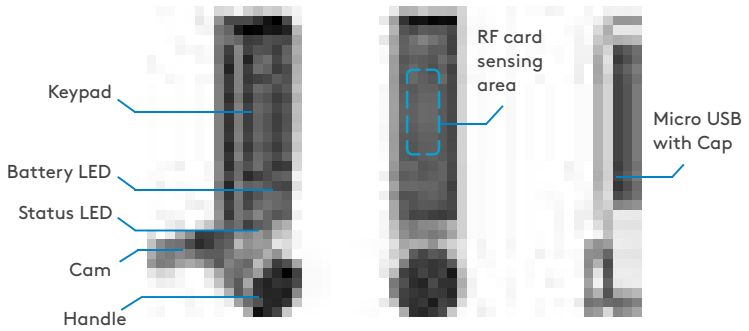

Change Batteries

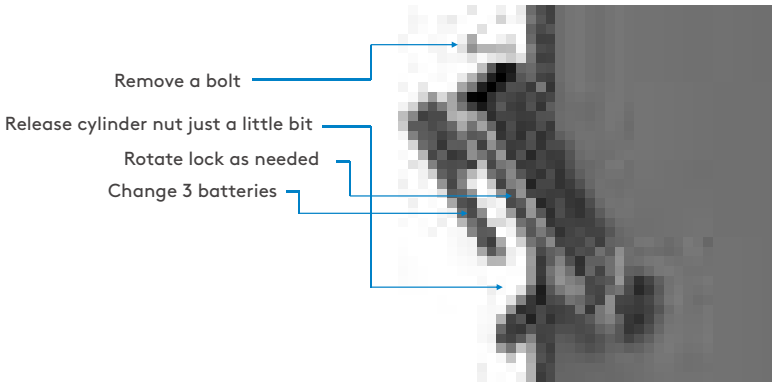

Note:
Instructions for use, installation dimensions, etc. More information is available in the instruction book with the lock.

tel | +90 212 721 44 44 fax | +90 212 721 44 45

RFID Card Reader

3205 ELECTRONIC CABINET LOCK

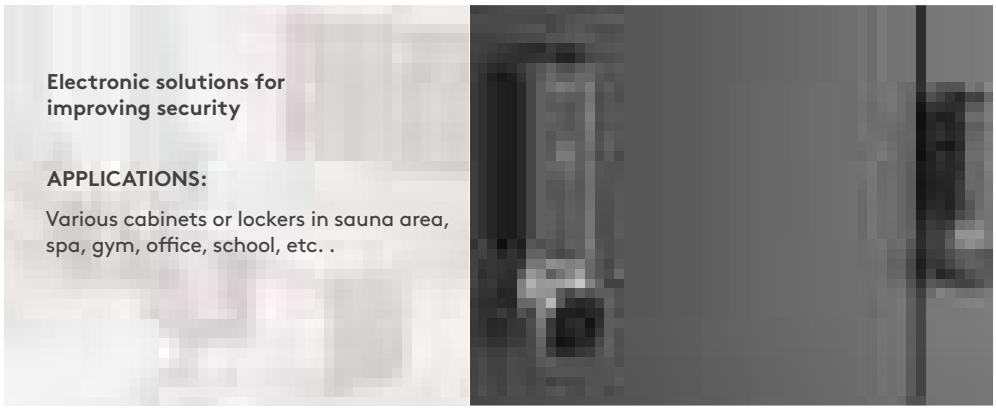

Electronic solutions for improving security

APPLICATIONS:

Various cabinets or lockers in sauna area, spa, gym, office, school, etc. .

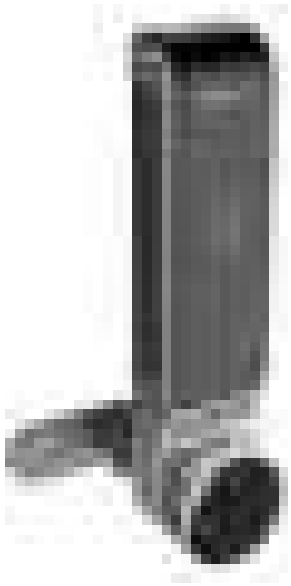

RFID Card
13.56Mhz MIFARE - Standard ISO14443A

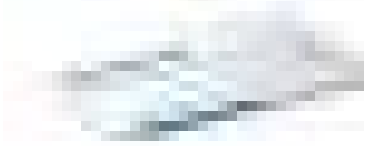

Order separately
Printed: (340.0.2639)
Unprinted: (340.0.2640)

Technical specifications

• Operating voltage:	3x1.5 V = 4.5 V
• Battery:	3xAAA Alkali battery
• Battery life:	Approx. 1.5 year (daily 10 use)
• Card type:	RFID 13.56Mhz MIFARE - Standard ISO14443A
• Operating temperature range:	-20°C ~ +70°C
• Operating humidity range:	0 ~ 90 % RH

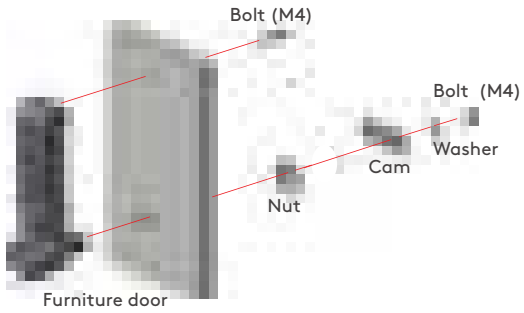

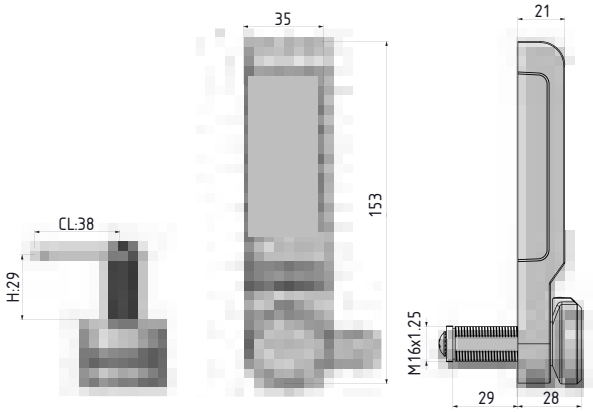

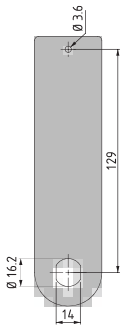

Cut out:

- Ability to open with a RFID card without key
- Elegant design suitable for office environments
- Multi-user support
- Micro USB emergency power-supply
- Low battery level indicator
- For general or specialised use
- Easy installation
- Easy to use
- High-security
- Burglar alarm
- Melody yes/no adjustment
- Stylish visual-warning LEDs

MATERIALS

BODY:	Aluminium
HANDLE:	Aluminium
PANEL:	Plastic
CAM:	Steel

⚠ These cams are shipping **with product.**

CAM	ITEM CODE	CH	CL
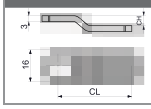	30405782	0	38
	30405781	5	37

⚠ For another cam options you can **order seperately** from table.

CAM	ITEM CODE	CH	CL
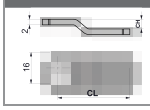	31403011	0	33
	30403157	3	48
	30403125	7	40

ELECTRONIC CABINET LOCK 3211

Touch Panel

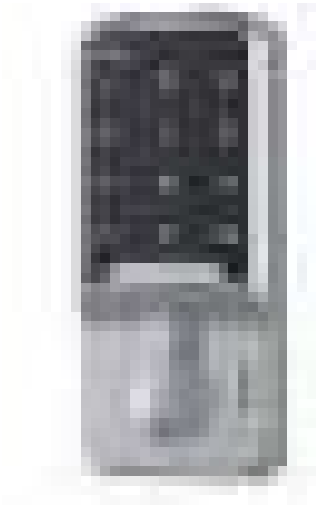

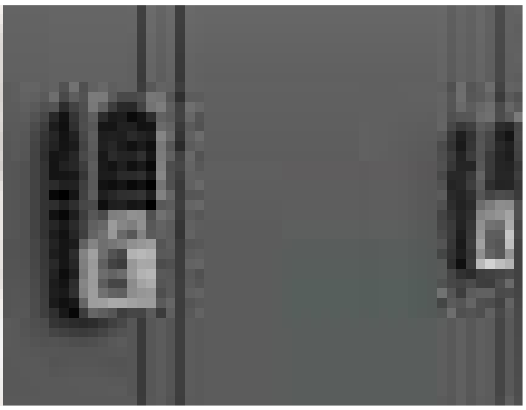

Electronic solutions for improving security

APPLICATIONS:

Various cabinets or lockers in sauna area, spa, gym, office, school, etc.

- Ability to open with a password without card and key
- Elegant design suitable for office environments
- When the password has been forgotten, it is possible to remote control and USB-Key for solving the password
- Micro USB emergency power-supply
- Low battery level indicator
- For general or specialised use
- Auto-alarm will be activated when input wrong password 4 times and the lock will be died for 60 seconds.
- You can create the fake pin password against thievery
- Easy installation
- Easy to use
- High-security
- Melody yes/no adjustment
- Stylish visual-warning LEDs

MATERIALS

BODY:	Aluminium
HANDLE:	Aluminium
CAM:	Steel

Note:
Instructions for use, installation dimensions, etc. More information is available in the instruction book with the lock.

Technical specifications

• Operating voltage:	2x1.5 V = 3 V
• Battery:	2xAAA Alkali battery
• Battery life:	Approx. 1.5 year (daily 10 use)
• Password combination:	1-15 digit
• Operating temperature range:	-20°C ~ +70°C
• Operating humidity range:	0 ~ 90 % RH

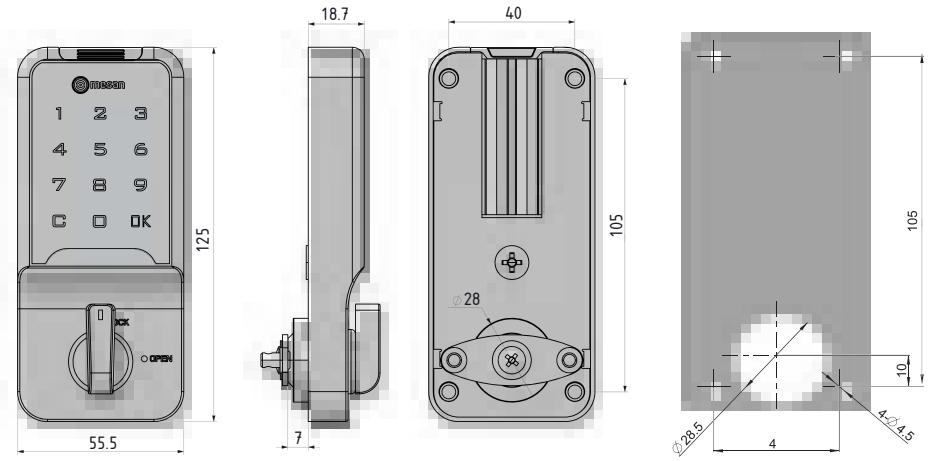

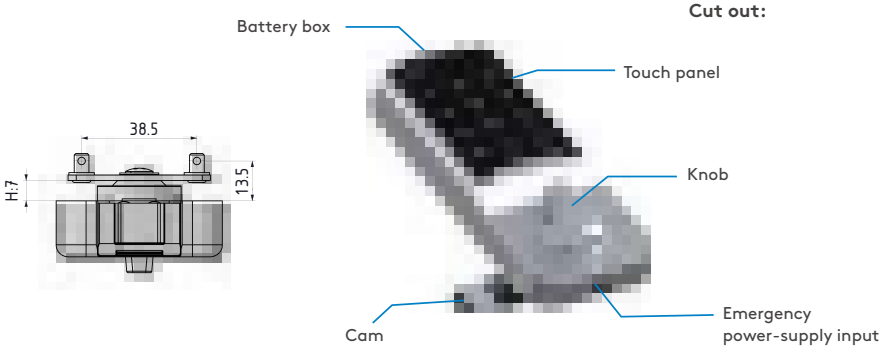

For another cam options you can v from table.

Product will be shipped with **Espagnolette cam** appears in technical drawing.

CAM	ITEM CODE	CH	CL
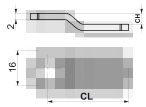	30403124	0	43
	31403011	0	33
	30403157	3	48
	30403125	7	40

tel | +90 212 721 44 44 fax | +90 212 721 44 45

Touch Panel

3212 ELECTRONIC CABINET LOCK



Electronic solutions for improving security

APPLICATIONS:

Various cabinets or lockers in sauna area, spa, gym, office, school, etc. .

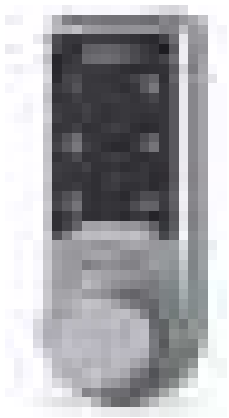

Technical specifications

• Operating voltage:	3 V
• Battery:	Cr2032 battery
• Battery life:	Approx. 1.5 year (daily 10 use)
• Password combination:	1-15 digit
• Operating temperature range:	-20˚C ~ +70˚C
• Operating humidity range:	0 ~ 90 % RH

- Ability to open with a password without card and key
- Elegant design suitable for office environments
- When the password has been forgotten, it is possible to remote control and USB-Key for solving the password
- Micro USB emergency power-supply
- Low battery level indicator
- For general or specialised use
- Auto-alarm will be activated when input wrong password 4 times and the lock will be died for 60 seconds.
- You can create the fake pin password against thievery
- Easy installation
- Easy to use
- High-security
- Melody yes/no adjustment
- Stylish visual-warning LEDs

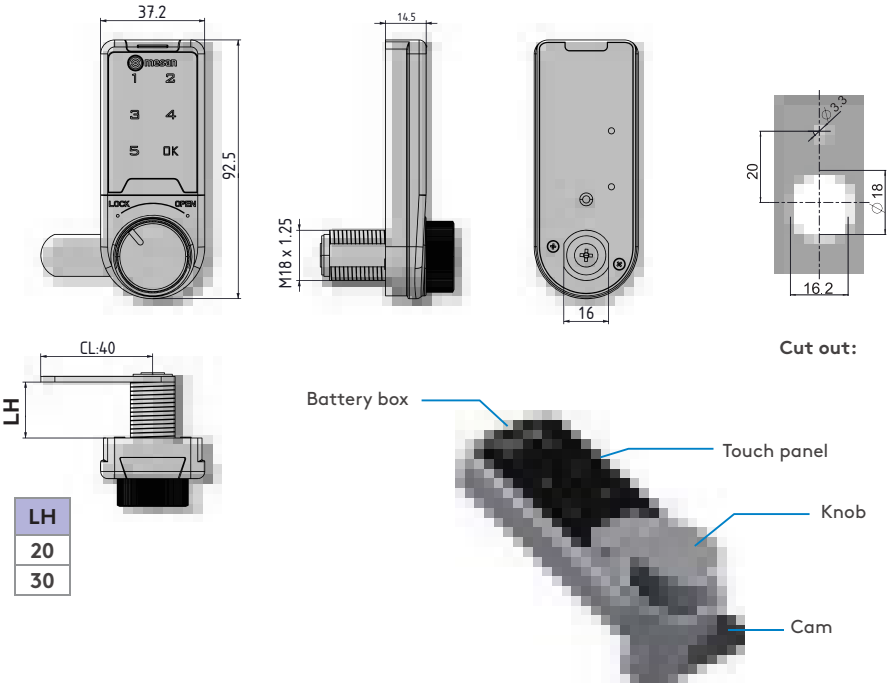

LH
20
30

MATERIALS

BODY:	Aluminium
HANDLE:	Aluminium
CAM:	Steel

⚠ This cam are shipping with product.

⚠ For another cam options you can **order seperately** from table.

CAM	ITEM CODE	CH	CL
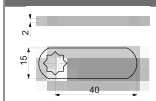	30403877	0	40

CAM	ITEM CODE	CH	CL
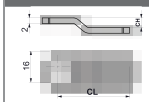	31403011	0	33
	30403157	3	48
	30403125	7	40

Group Code	Housing Length
3212	LH

Note:
Instructions for use, installation dimensions, etc. More information is available in the instruction book with the lock.

ELECTRONIC CABINET LOCK — 3213

Touch Panel



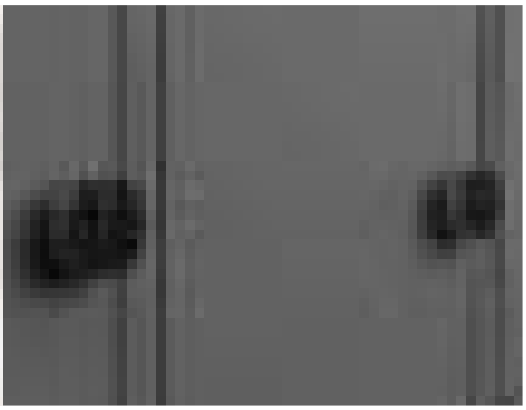

Electronic solutions for improving security

APPLICATIONS:

Various cabinets or lockers in sauna area, spa, gym, office, school, etc.

- Ability to open with a password without card and key
- Elegant design suitable for office environments
- When the password has been forgotten, it is possible to remote control and USB-Key for solving the password
- Micro USB emergency power-supply
- Low battery level indicator
- For general or specialised use
- Auto-alarm will be activated when input wrong password 4 times and the lock will be died for 60 seconds.
- You can create the fake pin password against thievery
- Easy installation
- Easy to use
- High-security
- Melody yes/no adjustment
- Stylish visual-warning LEDs

MATERIALS

BODY:	Aluminium
CAM:	Steel

Technical specifications

• Operating voltage:	3 V
• Battery:	Cr2032 battery
• Battery life:	Approx. 1.5 year (daily 10 use)
• Password combination:	1-15 digit
• Operating temperature range:	-20°C ~ +70°C
• Operating humidity range:	0 ~ 90 % RH

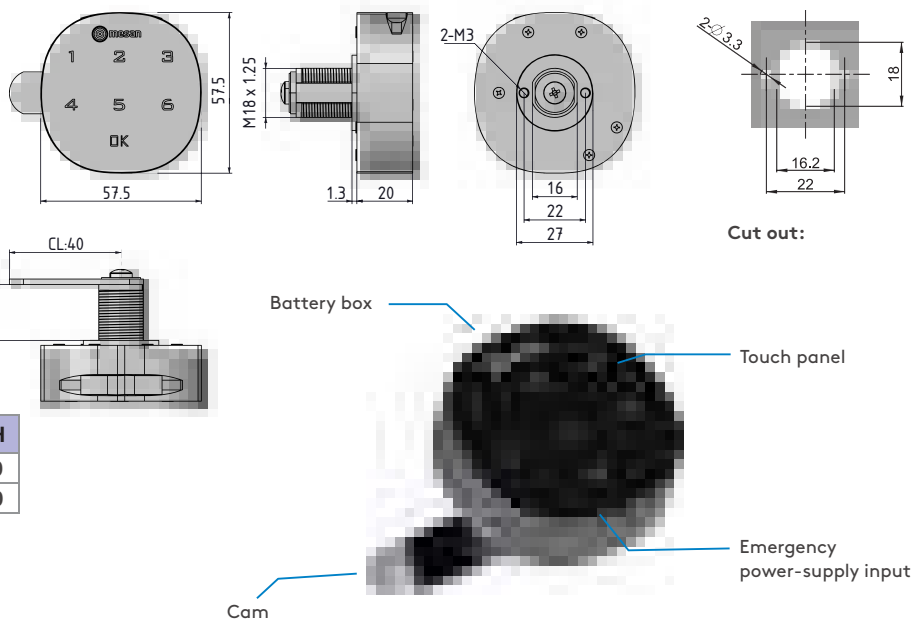

LH
20
30

Note:
Instructions for use, installation dimensions, etc. More information is available in the instruction book with the lock.

⚠ This cam are shipping with product.

⚠ For another cam options you can **order seperately** from table.

CAM	ITEM CODE	CH	CL
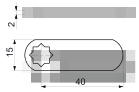	30403877	0	40

CAM	ITEM CODE	CH	CL
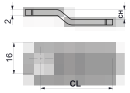	31403011	0	33
	30403157	3	48
	30403125	7	40

Group Code	Housing Length
3213	LH

tel | +90 212 721 44 44 fax | +90 212 721 44 45

Touch Panel

3214 ELECTRONIC CABINET LOCK

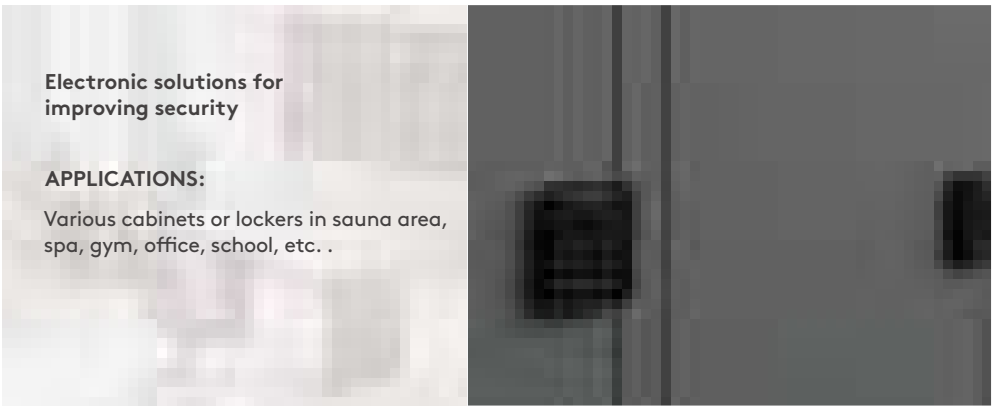

Electronic solutions for improving security

APPLICATIONS:

Various cabinets or lockers in sauna area, spa, gym, office, school, etc. .

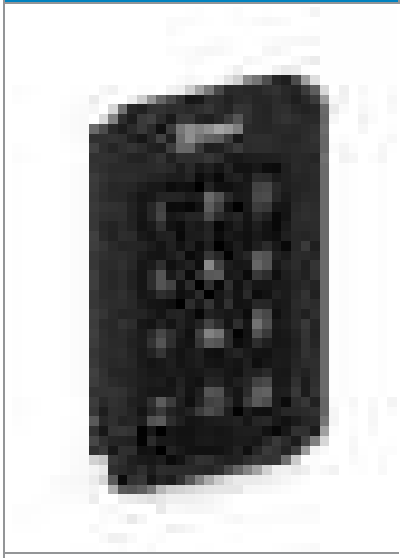

Technical specifications

• Operating voltage:	3x1.5 V = 4.5 V
• Battery:	3xAAA Alkali battery
• Battery life:	Approx. 1.5 year (daily 10 use)
• Password combination:	1-15 digit
• Operating temperature range:	-20°C ~ +70°C
• Operating humidity range:	0 ~ 90 % RH

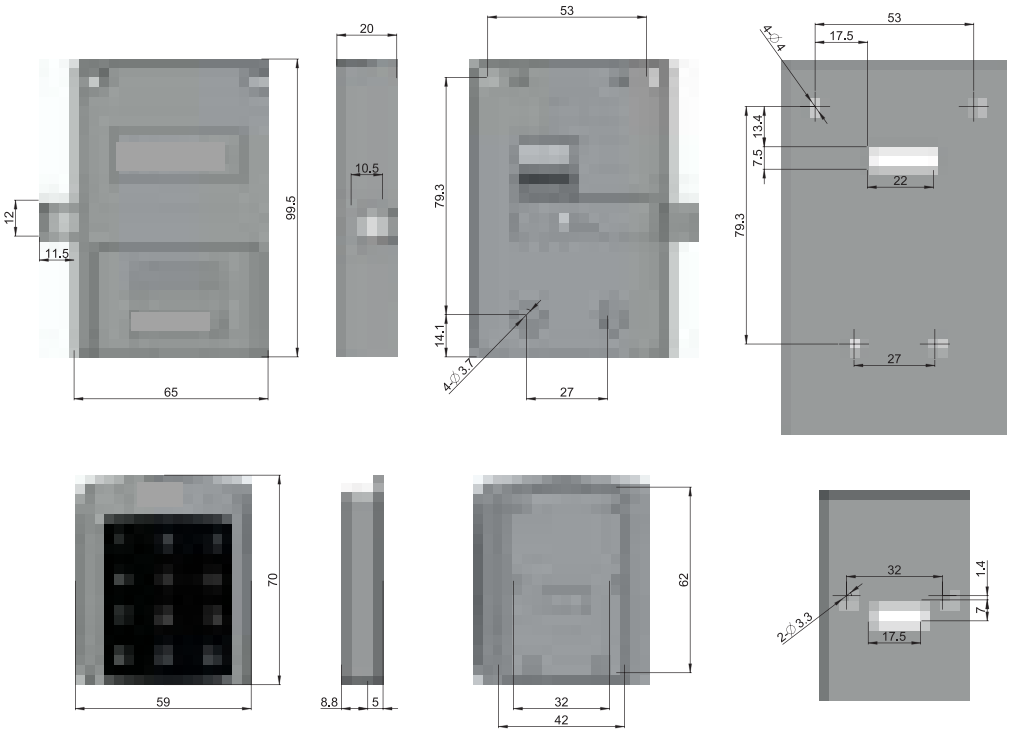

- Ability to open with a password without card and key
- Elegant design suitable for office environments
- When the password has been forgotten, it is possible to remote control and USB-Key for solving the password
- Micro USB emergency power-supply
- Low battery level indicator
- For general or specialised use
- Auto-alarm will be activated when input wrong password 4 times and the lock will be died for 60 seconds.
- You can create the fake pin password against thievery
- Easy installation
- Easy to use
- High-security
- Melody yes/no adjustment
- Stylish visual-warning LEDs

MATERIALS

BODY:	Plastic
CAM:	Steel

Note:
Instructions for use, installation dimensions, etc. More information is available in the instruction book with the lock.

ELECTRONIC LOCKING SYSTEM

ELECTRONIC CABINET LOCK 3202

Keypad

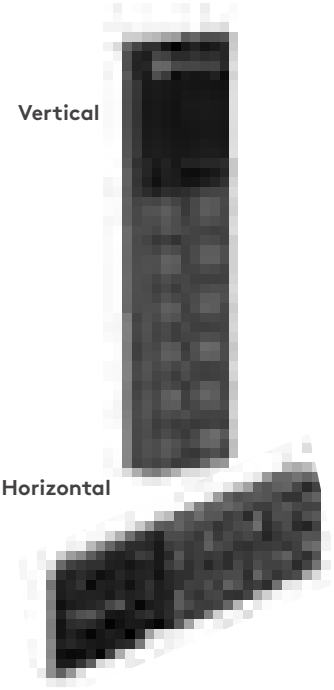

Electronic solutions for improving security

APPLICATIONS:

Various cabinets or lockers in sauna area, spa, gym, office, school, etc.

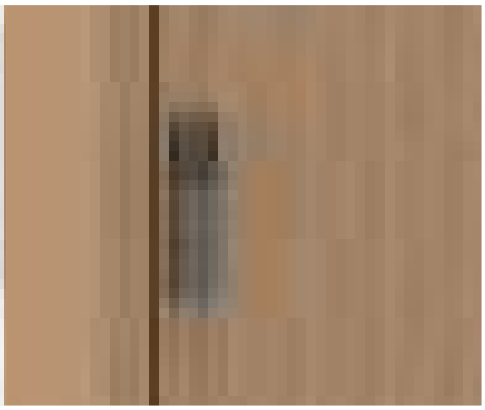

- Ability to open with a password without card and key
- Elegant design suitable for office environments
- Multi-user support
- Micro USB emergency power-supply input behind sliding cover
- Low battery level indicator
- For general or specialised use
- Easy installation
- Easy to use
- High-security
- Burglar alarm
- Melody yes/no adjustment
- Stylish visual-warning LEDs

MATERIALS

BODY:	Plastic
LATCHING BODY:	Plastic
GASKET:	Rubber
CAM:	Steel

Note:
Instructions for use, installation dimensions, etc. More information is available in the instruction book with the lock.

Technical specifications

• Operating voltage:	3x1.5 V = 4.5 V
• Battery:	3xAA Alkali battery
• Battery life:	Approx. 1.5 year (daily 10 use)
• Password combination:	4-12 digit
• Operating temperature range:	-15 ~ 55°C
• Operating humidity range:	0 ~ 90 % RH

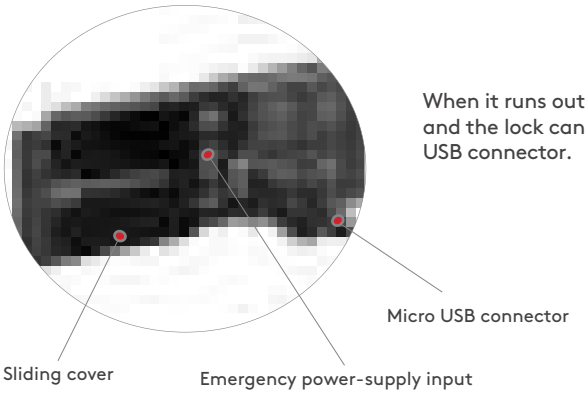

When it runs out of batteries, slide the cover and the lock can be opened with the Micro USB connector.

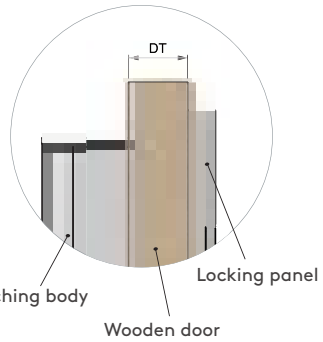

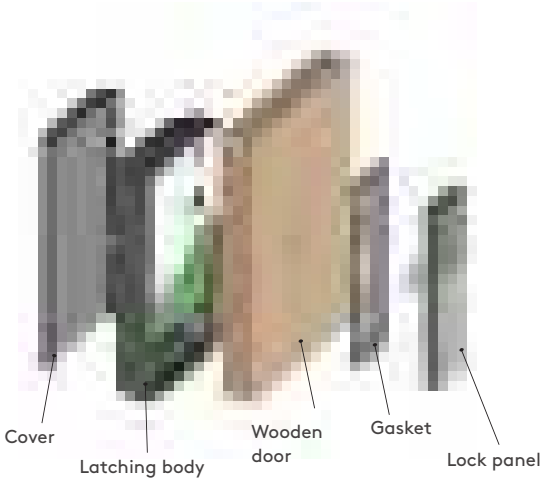

DT - DOOR THICKNESS	
Min	**Max**
11mm	27mm

For different door thicknesses please contact Essentra.

tel | +90 212 721 44 44 fax | +90 212 721 44 45

RFID Card Reader

3203 ELECTRONIC CABINET LOCK

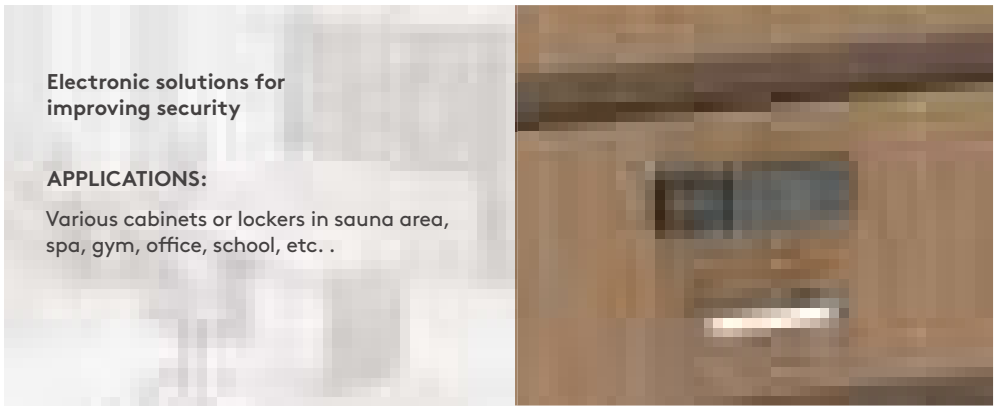

Electronic solutions for improving security

APPLICATIONS:

Various cabinets or lockers in sauna area, spa, gym, office, school, etc. .

Technical specifications

• Operating voltage:	3x1.5 V = 4.5 V
• Battery:	3xAA Alkali battery
• Battery life:	Approx. 1.5 year (daily 10 use)
• Card type:	RFID 13.56Mhz MIFARE - Standard ISO14443A
• Operating temperature range:	-15 ~ 55°C
• Operating humidity range:	0 ~ 90 % RH

External dimensions

Lock panel

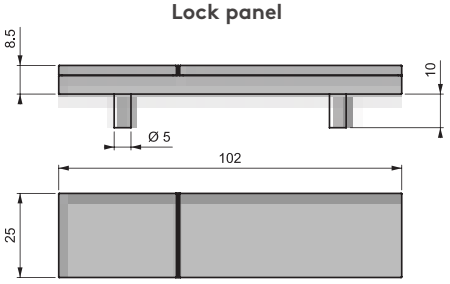

Bracket

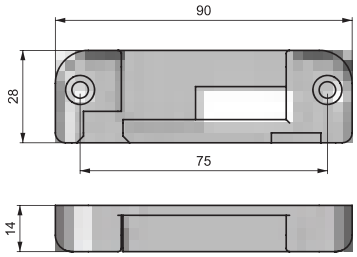

Latching body

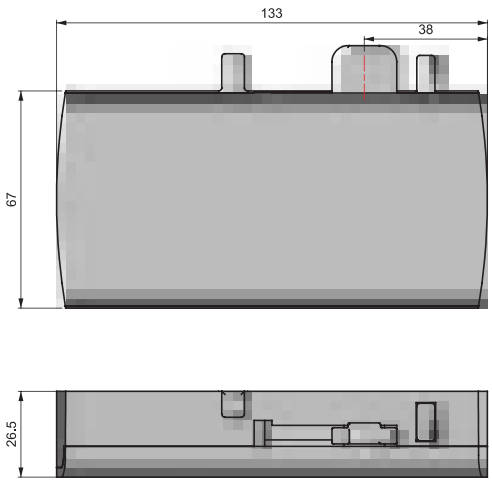

Note:
Instructions for use, installation dimensions, etc. More information is available in the instruction book with the lock.

Group Code	Position
	P

POSITION	P
Horizontal	1
Vertical	2

Vertical



Horizontal



RFID Card
13.56Mhz MIFARE - Standard ISO14443A

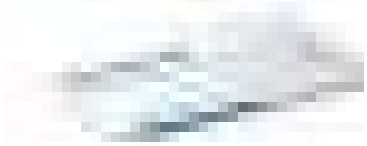

Order separately
Printed: (340.0.2639)
Unprinted: (340.0.2640)

- Ability to open with a RFID card without key
- Elegant design suitable for office environments
- Multi-user support
- Micro USB emergency power supply input behind sliding cover
- Low-battery level indicator
- For general or specialised use
- Easy installation
- Easy to use
- High security
- Burglar alarm
- Melody yes/no adjustment
- Stylish visual-warning LEDs

MATERIALS

BODY:	Plastic
LOCK PANEL:	Plastic
GASKET:	Rubber
CAM:	Steel

ELECTRONIC CABINET LOCK

3201

Keypad

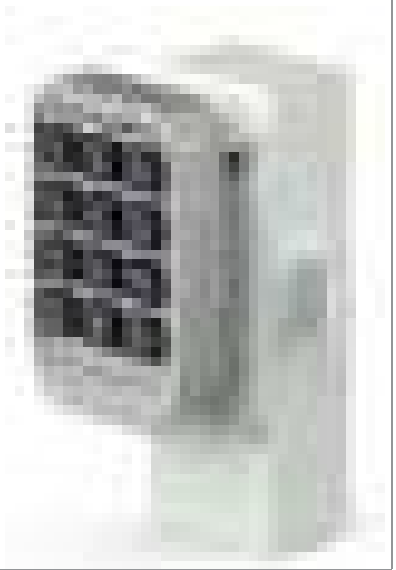

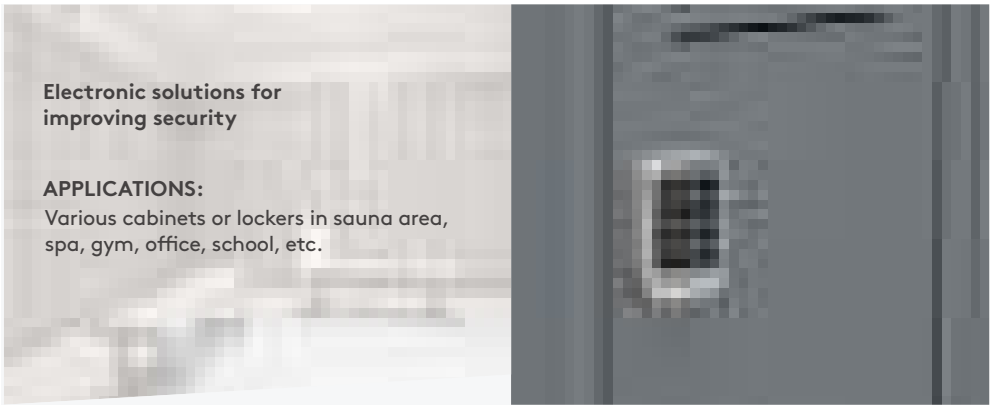

Electronic solutions for improving security

APPLICATIONS:
Various cabinets or lockers in sauna area, spa, gym, office, school, etc.

- Input password to open door; no need for card or key
- Two types:
  -- Public with temporary password
  -- Private with permanent password
- Two management levels: master code and user code
- Low power alarm: the lock will indicate when the battery has insufficient power
- Emergency open: external power supply can be used via a socket in the lock if sufficient battery power is not available

MATERIALS

LOCK PANEL:	Zamak
KEYS:	Plastic
LOCK BODY:	Plastic
CAM:	Zamak

Technical specifications

Password digital:	>= 4, <= 10
Power source:	4 pcs AAA alkaline batteries
Static current:	<10uA
Dynamic current:	<220mA
Alarm power:	<4.7V
Memory capacity:	4160 Bit

Work temperature:	-25°C ~ 65°C
Store temperature:	-25°C ~ 85°C
Store time:	> 10 years
Change:	1,000,000 times
Work humidity:	5 ~ 95 % RH (No condensation)

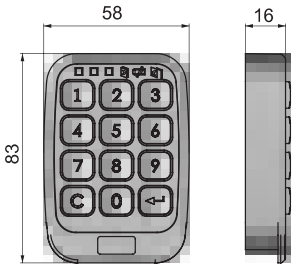

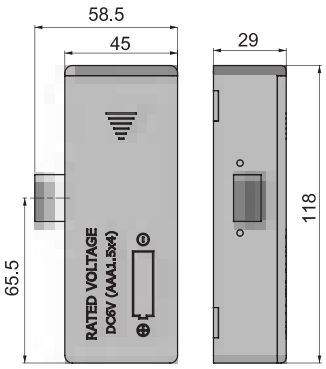

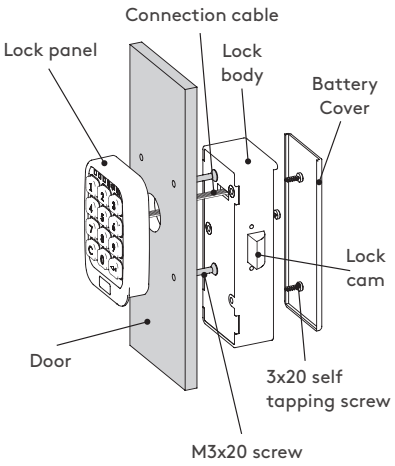

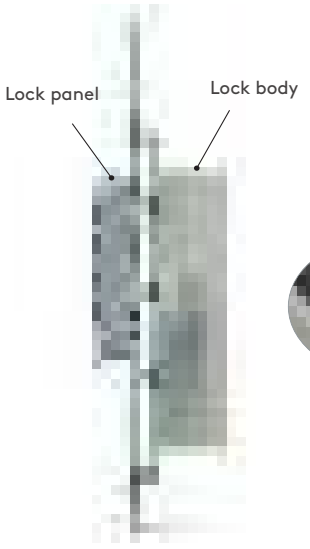

Note:
Instructions for use, installation dimensions, etc. More information is available in the instruction book with the lock.



External power socket

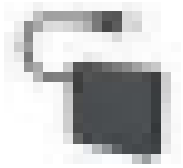

External power supply
product code:
340.0.2643
(Order separately)

tel | +90 212 721 44 44 fax | +90 212 721 44 45

Remote Control

3301 ELECTRONIC CABINET LOCK

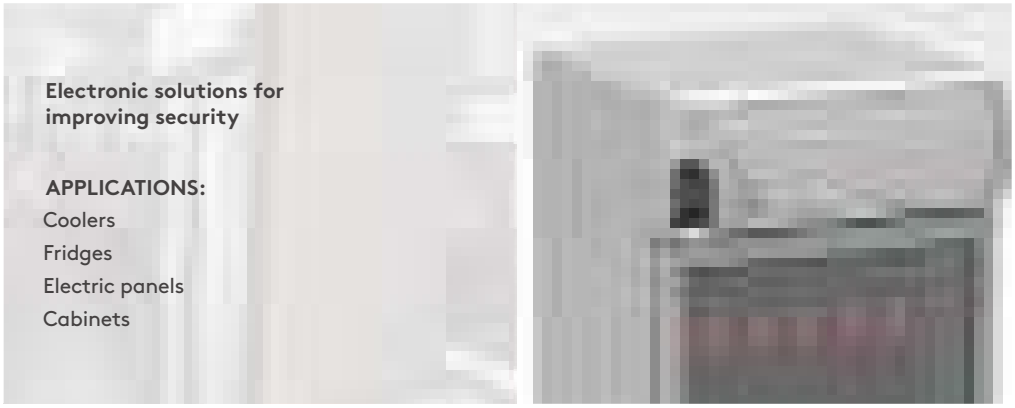

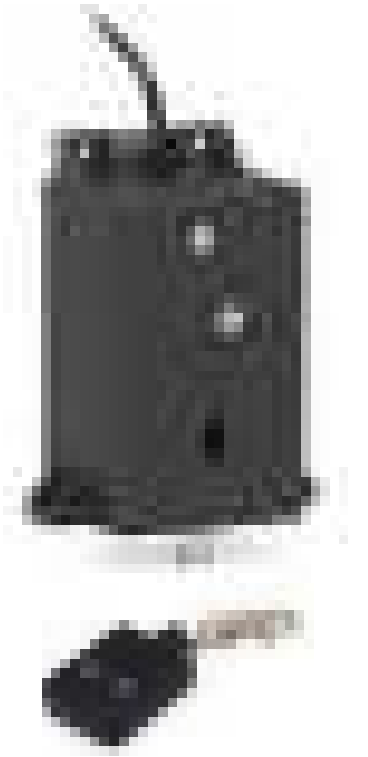

Technical specifications

Main board

• Input voltage:	12V - 18V AC
• Output current:	650 mA x2
• RF frequency:	433.92 MHz
• Working temperature range:	-25 °C ~ +70 °C
• Control:	Microprocessor
• Cable length:	70 cm
• Alert type:	Buzzer
• Identification:	Master remote control
• Locking security:	Watchdog

Remote control:

• RF Frequency:	433.92 MHz
• Keys:	2 (Open/Close)
• Battery:	27A
• Control distance:	50 m (ideal conditions)

Master remote control

• RF Frequency:	433.92 MHz
• Keys:	2 (Same function)
• Battery:	27A
• Function:	New remote control identification

- Microprocessor controlled.
- Working voltage 220 V AC (with a special transformer)
- Open and close remote control
- Buzzer
- Manual opening slot in case of power outage
- New remote control identification with a master remote control
- More than one lock can be controlled by one remote control or vice versa
- More than one remote control can control one lock
- Stroke: 8 mm

MATERIALS

BODY:	Plastic
PLUNGER:	Steel
BRACKET:	Delrin

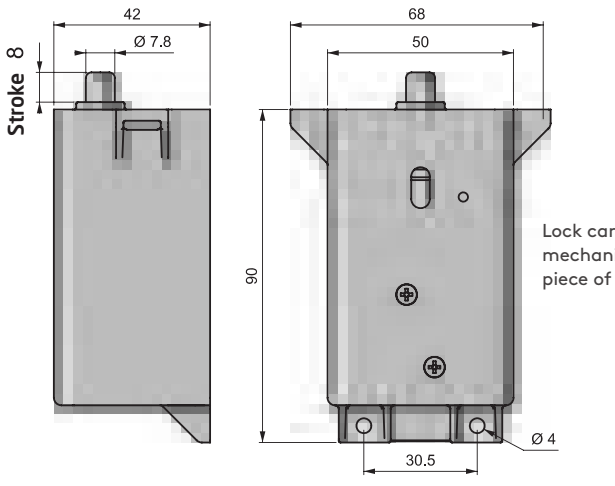

Bracket

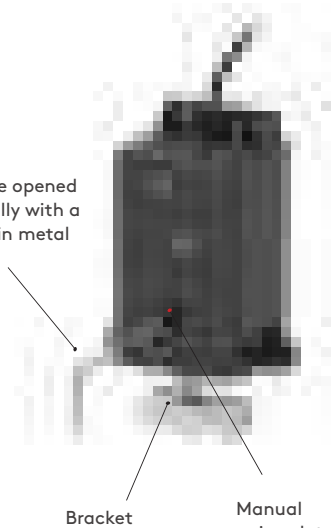

Multidirectional application

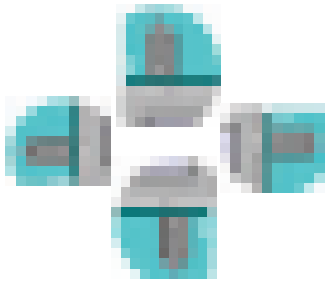

INDEKS

Group code:	Product name:	Page:
001	SWINGHANDLE	26,28
002	SWINGHANDLE - GEAR BOX	54
003	THREE - POINT LOCK	83
006	SWINGHANDLE	49
03030	INTERNAL LOCKING SYSTEM	86
007	SWINGHANDLE - GEAR BOX	76
008	SWINGHANDLE	40
010	CAM LOCK - T HANDLE	274
011	CAM LOCK - L HANDLE	274
012	HVAC LOCK	126- 129
012A1	INTERNAL SAFETY HANDLE	130
012A2	LEVER HANDLE	129
012A3	INTERNAL SAFETY HANDLE	129
013	FIRE- HOSE CABINET LOCK	284
014	T HANDLE HEAVY DUTY LOCK	100-106
015	T HANDLE HEAVY DUTY LOCK	112-113
016	PUSH - TO - CLOSE	90-94,454
018	T HANDLE HEAVY DUTY LOCK	114
020	SLIDING -GLASS DOOR LOCK	275
021	GLASS - DOOR LOCK	275
025	GLASS HINGE	433
030	FURNITURE LOCK	277
032	FURNITURE LOCK	276
033	FURNITURE LOCK	277
035	STEEL CUPBOARD LOCK	281
040	COMPRESSION LOCK	226-227,462-463
042	SCREW LOCK	479
045	COMPRESSION - SPRING LATCH	229,469
050	CAM LOCK	262- 263
050	CAM LOCK - BALL	235
050 AX	ACESSORIES	264
055	PADLOCKABLE - KNOB	236-239
055	CABINET LOCK	241
056	CAM LOCK	271
057	MINI CAM LOCK	268
058	STEEL CUPBOARD LOCK	282
059	SLIDING - DOOR LOCK	279
060	QUARTER TURN-SPRING LOADED	195,458
060 AX	ACCESSORIES	219-221
062	QUARTER TURN- WING KNOB	196
063	CAM LOCK	249,476
064	CAM LOCK -L HANDLE	257
064	CAM LOCK -T HANDLE	256
064	STEPPED COVER LOCK	222
064	QUARTER TURN- SPRING LOADED	223,457
064	QUARTER TURN -WING KNOB	224-225
065	CAM LOCK - WING KNOB	252,474
065	QUARTER TURN-WING KNOB	482
066	MINI QUARTER TURN - SPRING LOADED	232,456
070	LIFT & TURN LOCK	146
071	SLIDING LOCK	160

tel | +90 212 721 44 44 fax | +90 212 721 44 45

Group code:	Product name:	Page:
072	FUNCTIONAL LOCK	147
073	QUARTER-TURN LOCK	165
074	COVER PULL (SNAP-IN)	419
075	PANEL LOCK WITH HEXAGONAL HEAD	138
077	COMPRESSION TRIGGER LOCK	140
078	CLAMPS (3D)	136
079	COVER STAY	434, 516
082	FLUSH SPRING HANDLE	416
083	ALUMINIUM HANDLE	406
084	MILLENIUM HANDLE	405
085	DRAWER HANDLE	405
086	COVER HANDLE	412
087	COVER HANDLE	413
089	SPRING LOADED	330
090	SIDE HINGE (10 mm)	288,512
091	SIDE HINGE (12 mm)	288
092	SIDE HINGE (12 mm)	288, 512
093	SIDE HINGE (16 mm)	289
094	CONCEALED HINGE	302
095	CONCEALED HINGE	310-311, 492
096	CONCEALED HINGE	304 -305
097	CORNER HINGE	336, 493
098	CORNER HINGE	341
099	LEAF HINGE	358-359, 500, 502
100	CORNER HINGE	348
101	SWINGHANDLE	29
102	SWINGHANDLE - GEAR BOX	55
103	THREE - POINT LOCK	83
103	THREE - POINT LOCK (Wing knob, T and L handle)	78-79,450-451
103	QUARTER TURN LOCK	244
104	LINEAR HANDLE LOCK	68-69
105	SWINGHANDLE	30
106	SWINGHANDLE	38
107	SWINGHANDLE - GEAR BOX	61
108	SWINGHANDLE	42,44-45
109	SWINGHANDLE - GEAR BOX	70,72-73
110	CAM LOCK -T HANDLE	254,472
111	CAM LOCK -T HANDLE	255,473
112	HVAC LOCK	118-121
112	HVAC LOCK - ACCESSORIES	122-125
113	FIRE- HOSE CABINET LOCK	285
114	MINI T HANDLE CABINET LOCK	107-108
115	T HANDLE HEAVY DUTY LOCK	110
116	PUSH - TO - CLOSE	97
118	T HANDLE HEAVY DUTY LOCK	115
132	FURNITURE LOCK	276
140	MINI COMPRESSION LOCK	228,460
150	CAM LOCK	266

INDEKS

Group code:	Product name:	Page:
157	MINI CAM LOCK	269
158	MINI CAM LOCK	283
159	SLIDING-DOOR LOCK	278
160	QUARTER TURN- SPRING CAM	216,458
161	KNOB LOCK (plastic)	214
162	PACO LOCK	218
163	SPRING CAM LOCK	248
165	MINI CAM LOCK - WING KNOB	253
166	MINI QUARTER TURN - WING KNOB	234
170	LIFT & TURN LOCK	144-145
171	MINI SLIDING LOCK	161
174	COVER PULL (SNAP-IN)	419
176	HOOKED LOCK	166
177	COMPRESSION TRIGGER LOCK	141
179	COVER STAY	436 , 517
183	ALUMINIUM HANDLE	406
184	METAL HANDLE	407
185	FINGER HANDLE	404
186	COVER HANDLE	412
187	COVER HANDLE	414
189	SPRING LOADED	328
191	SIDE HINGE	292
192	SIDE HINGE (12 mm)	289, 513
193	SIDE HINGE (16 mm)	289, 513
194	CONCEALED HINGE	303
195	CONCEALED HINGE	312 -313
196	CONCEALED HINGE	306
197	CORNER HINGE	337
199	LEAF HINGE	357
200	CORNER HINGE	346-347
201	SWINGHANDLE	27
203	QUARTER TURN- WING KNOB	243
203	QUARTER TURN LOCK	245
203	THREE - POINT LOCK	82
203	THREE - POINT LOCK (Wing knob, T and L handle)	81-81
204	LINEAR HANDLE LOCK	66-67
205	SWINGHANDLE	50-51
206	SWINGHANDLE	35
207	SWINGHANDLE - GEAR BOX	62
208	SWINGHANDLE	43
209	SWINGHANDLE - GEAR BOX	75
211	PADLOCKABLE -L HANDLE	202,470
214	T HANDLE HEAVY DUTY LOCK	98-99
215	T HANDLE HEAVY DUTY LOCK	111
216	PUSH - TO - CLOSE	95
240	COMPRESSION LOCK - T HANDLE	258-259
250	CAM LOCK	267
257	MINI CAM LOCK	270
260	QUARTER TURN- PADLOCKABLE	217,459
261	KNOB LOCK (driver version)	215
261	KNOB LOCK (cylinder version)	251

tel | +90 212 721 44 44 fax | +90 212 721 44 45

Group code:	Product name:	Page:
262	PADLOCKABLE - WING KNOB	199
265	PADLOCKABLE - WING KNOB	475
266	MINI QUARTER TURN - SPRING LOADED	233,456
267	METAL KEY	191
270	SWELL LOCK	148-149
271	SLIDING LOCK	163
274	COVER PULL (SNAP-IN)	418
276	SAFETY LATCH	479
279	COVER STAY	435 , 515
284	METAL HANDLE	408
286	COVER HANDLE	404
287	COVER HANDLE	413
289	CONCEALED HINGE	331, 489
293	SIDE HINGE	296
294	CONCEALED HINGE	307
295	CONCEALED HINGE	314-315, 482-483
296	CONCEALED HINGE	308-309
297	CORNER HINGE	338
298	CORNER HINGE	340
299	LEAF HINGE	356, 500
300	HVAC HINGE	382
306	SWINGHANDLE	34
307	SWINGHANDLE - GEAR BOX	63
308	SWINGHANDLE	46
309	SWINGHANDLE - GEAR BOX	74
315	T HANDLE HEAVY DUTY LOCK	109
316	PUSH - TO - CLOSE	96
320.02.16X	CABLE SHUNTING RINGS	433
340	COMPRESSION LOCK	260,261
340.10.00X	ACOUSTIC SPONGE (Formed type)	437
340.0.26XX	ANALOG SENSORS	527
340.00.131	TOGGLE LATCH	428
340.00.132	TOGGLE LATCH	514
340.00.134	TOGGLE LATCH	514
340.00.135	TOGGLE LATCH	428
340.00.133	TOGGLE LATCH	428
340.00.3XX	DIAPHGRAM GROMMETS	438
340.00.40X	RUBBER PLUG	439
340.02.430	SCREW	432
340.08.001	DOOR HOLDBACK	440
340.08.01X	RUBBER STOPPER	439
340.09.XXX	GASKETS	388-400
340.20.0XX	DOOR BOTTOM BRUSHES (Screw type)	441
340.20.0XX	DOOR BOTTOM BRUSHES (Plug-in type)	441
340.0.8023	TRUCK CARRIER HINGE	384
340.0.8209	TRUCK CARRIER HINGE	384
350	QUARTER TURN LOCK	240
360	QUARTER TURN -SPRING LOADED	213
361	SECURE QUARTER TURN	204
362	QUARTER TURN-WING KNOB	197
366	MINI QUARTER TURN - EASY FIXING	230

INDEKS

Group code:	Product name:	Page:
368	METAL KEY	190
371	SLINDING LOCK	160
374	COVER PULL (SNAP-IN)	417
377	COMPRESSION TRIGGER LOCK	142
384	METAL HANDLE	409
387	COVER HANDLE	415
389	SPRING LOADED	329
393	SIDE HINGE	296
394	CONCEALED HINGE	332
395	CONCEALED HINGE	316-317, 484-485
397	CORNER HINGE	339
398	CORNER HINGE	342
399	LEAF HINGE	360-501,503
340	COMPRESSION LOCK - WING KNOB	260-261
400	CORNER HINGE	345
401	SWINGHANDLE	444
402	SWINGHANDLE - GEAR BOX	448-449
406	SWINGHANDLE	36-37
407	MODULER SYSTEM SWINGHANDLE	64-65
408	SWINGHANDLE	32-33
409	SWINGHANDLE - GEAR BOX	59-60
411	PADLOCKABLE L HANDLE	477
416	PUSH-TO CLOSE LOCK	455
440	HYGIENIC COMPRESSION LOCK	466-467
450	CAM LOCK SPRING LOADED	265
460	HYGIENIC LOCK	468
461	SECURE QUARTER TURN	205
462	BRIDGE CLAMP SYSTEM	137
466	MINI LOCK	164
471	MINI SLIDING LOCK	161
477	COMPRESSION TRIGGER LOCK	143
484	METAL HANDLE	407
487	COVER HANDLE	414
493	SIDE HINGE	297
497	CORNER HINGE	343
498	CORNER HINGE	344
499	LEAF HINGE	366
500	HVAC HINGE	381
501	SWINGHANDLE	30 , 445
502	SWINGHANDLE - GEAR BOX	56-57, 446-447
508	SWINGHANDLE	48
518	SWINGHANDLE	50
540	COMPRESSION LOCK	464-465
560	QUARTER TURN - EASY FIXING	206
561	KNOB LOCK (plastic)	209
562	PADLOCKABLE - WING KNOB	198,471
566	MINI QUARTER TURN - EASY FIXING	231
571	SLIDING LOCK	162
584	FOLDABLE METAL HANDLE	410
593	SIDE HINGE	298
595	CONCEALED HINGE	327

tel | +90 212 721 44 44 fax | +90 212 721 44 45

Group code:	Product name:	Page:
599	LEAF HINGE	367,504
600	CORNER HINGE/HVAC HINGE	349-350, 498
601	SWINGHANDLE	31
602	SWINGHANDLE - GEAR BOX	58
612	HVAC LOCK	131-133
660	QUARTER TURN - EASY FIXING	207
661	QUARTER TURN - EASY FIXING	208
662	QUATER TURN- PADLOCKABLE	200-201
666	QUATER TURN- LOCK	242
671	SLIDING LOCK	162
684	METAL HANDLE	410
693	SIDE HINGE	299
693	HINGE WITH BEARING	379
695	CONCEALED HINGE	318-319, 486-487
699	LIFT - OFF HINGE	378
700	CORNER HINGE/HVAC HINGE	351
708	SWINGHANDLE	47
712	FUNCTIONAL LOCKING HINDE	134- 135
760	QUARTER TURN- SPRING LOADED	212
761	CAM LOCK - EASY FIXING	250
761	QUARTER TURN - EASY FIXING	210,211
784	METAL HANDLE	411
793	SIDE HINGE	290
795	CONCEALED HINGE	320, 488
799	LEAF HINGE	370,505
800	HVAC HINGE	380
808	SWINGHANDLE	39
809	SWINGHANDLE - GEAR BOX	77
860	QUARTER TURN LOCK	478
884	ALUMINIUM HANDLE	408
893	SIDE HINGE	291
895	CONCEALED HINGE	322
899	LEAF HINGE	365,508
900	LEAF HINGE	364
908	SWINGHANDLE	41
909	SWINGHANDLE - GEAR BOX	71
960	QUARTER TURN-MODULER HANDLE	203
993	SIDE HINGE	294
995	CONCEALED HINGE	324-325, 491
999	LEAF HINGE	509
1060	QUARTER TURN - SPRING LOADED	461
1093	SIDE HINGE	293
1095	CONCEALED HINGE	323
1100	ADHESIVE GASKET	401
1193	SIDE HINGE	295
1199	LEAF HINGE	373
1200	ADHESIVE GASKET	401
1293	LIFT-OFF HINGE	496
1299	MINI LEAF HINGE	355, 498

INDEKS

Group code:	Product name:	Page:
1300	ADHESIVE GASKET	401
1399	LEAF HINGE	497
1495	CONCEALED HINGE	333
1499	LEAF HINGE	363
1500	HVAC HINGE	383
1599	LEAF HINGE	368-369, 506-507
1699	LEAF HINGE	362
1795	CONCEALED HINGE	321
1995	CONCEALED HINGE	326, 490
2220	CIRCULAR INSPECTION WINDOW	425
2099	TORQUE HINGE	374
2150	DRAWING POCKET (A4)	424
2152	DRAWING POCKET (A5)	424
2199	TORQUE HINGE	374
2215	COUNTER SCREEN	426
2216	COUNTER SCREEN	426
2300	VENTILATION SHUTTER	422-423
2399	ADJUSTABLE TORQUE HINGE	376
240X	CAGE NUT	427
2599	TORQUE HINGE	375
245X	EYEBOLT	427
2499	ADJUSTABLE TORQUE HINGE	377
2700	TOGGLE LATCH	429
2701	TOGGLE LATCH	429
2702	TOGGLE LATCH	429
2750	SPRING LOADED LATCH WITHOUT STUD	431
2751	SPRING LOADED LATCH WITH STUD	431
276X	MINI INDEXING PLUNGERS	430
2800	ROTARY LACTH (Mini)	150-153
2801	CABLES	159
2810	ROTARY LACTH (Large)	154-155
2890	CONCEALED HINGE	511
2899	LEAF HINGE	371
2999	LEAF HINGE	510
3099	LIFT-OFF HINGE	499
3101	ELECTRONIC SWINGHANDLE	528
3102	ELECTRONIC SWINGHANDLE	529
3103	ELECTRONIC SWINGHANDLE	530
3104	ELECTRONIC SWINGHANDLE	531
3105	ELECTRONIC SWINGHANDLE	534
3106	ELECTRONIC SWINGHANDLE	535
3111	ELECTRONIC SWINGHANDLE	532
3111	ELECTRONIC SWINGHANDLE	533
3211	ELECTRONIC CABINET LOCK	540
3212	ELECTRONIC CABINET LOCK	541
3213	ELECTRONIC CABINET LOCK	542
3214	ELECTRONIC CABINET LOCK	543
3201	ELECTRONIC CABINET LOCK	546
3202	ELECTRONIC CABINET LOCK	544
3203	ELECTRONIC CABINET LOCK	545
3204	ELECTRONIC CABINET LOCK	538

tel | +90 212 721 44 44 fax | +90 212 721 44 45

Group code:	Product name:	Page:
3205	ELECTRONIC CABINET LOCK	539
3203	ELECTRONIC CABINET LOCK	545
3299	LIFT-OFF HINGE	499
3301	ELECTRONIC CABINET LOCK	547
3311	SOLENOID LOCK	537
3331	ELECTRONIC ROTARY LATCH	156-157
3341	ELECTRONIC KEEPER	536
3399	LIFT-OFF HINGE	499
3402	ACCESS CONTROL UNIT (ACU)	522
3403	ACCESS CONTROL UNIT (ACU PLUS)	524
3414	ACCESS INTERFACE (AIK) - KEYPAD	526
3415	ACCESS INTERFACE (AIP) - PROXIMITY	526
3416	STANDALONE ACCESS INTERFACE (S-AIK) - KEYPAD	525
3417	STANDALONE ACCESS INTERFACE (S-AIK) - KEYPAD	525
3501	EMERGENCY STOP BUTTON	139
3599	LIFT-OFF HINGE	495
4001	MECHANISM	85
4150	COMBINATION LOCK	280
4299	LIFT - OFF HINGE	372, 494
	CAMS WITH STOPPER	170- 171
	CAMS WITHOUT STOPPER	172 - 173
	STAINLESS STEEL CAMS	174
	ADDITIONAL CAMS	175
	SLIDE SHOE FOR CAM	176
	HOOK CAMS	176
	ACTUATOR PLATES	177
	ROUND ROD ACCESSORIES	180
	FLAT ROD ACCESSORIES	181 - 182
	ROD CORNER CONTROL (RCC)	183
	ROUND RODS	184, 185,452
	FLAT RODS	186, 187, 188,453
	KEYS	189 - 191



FACTORY - 2
22.000 sqm

- R&D Centre
- Sales & Service
- Asseambly
- Logistics Center
- Warehouse
- Laboratory





FACTORY - 1
13.500 sqm

- Production
- Finance
- Human Resources
- Quality Management
- Tooling maintenance